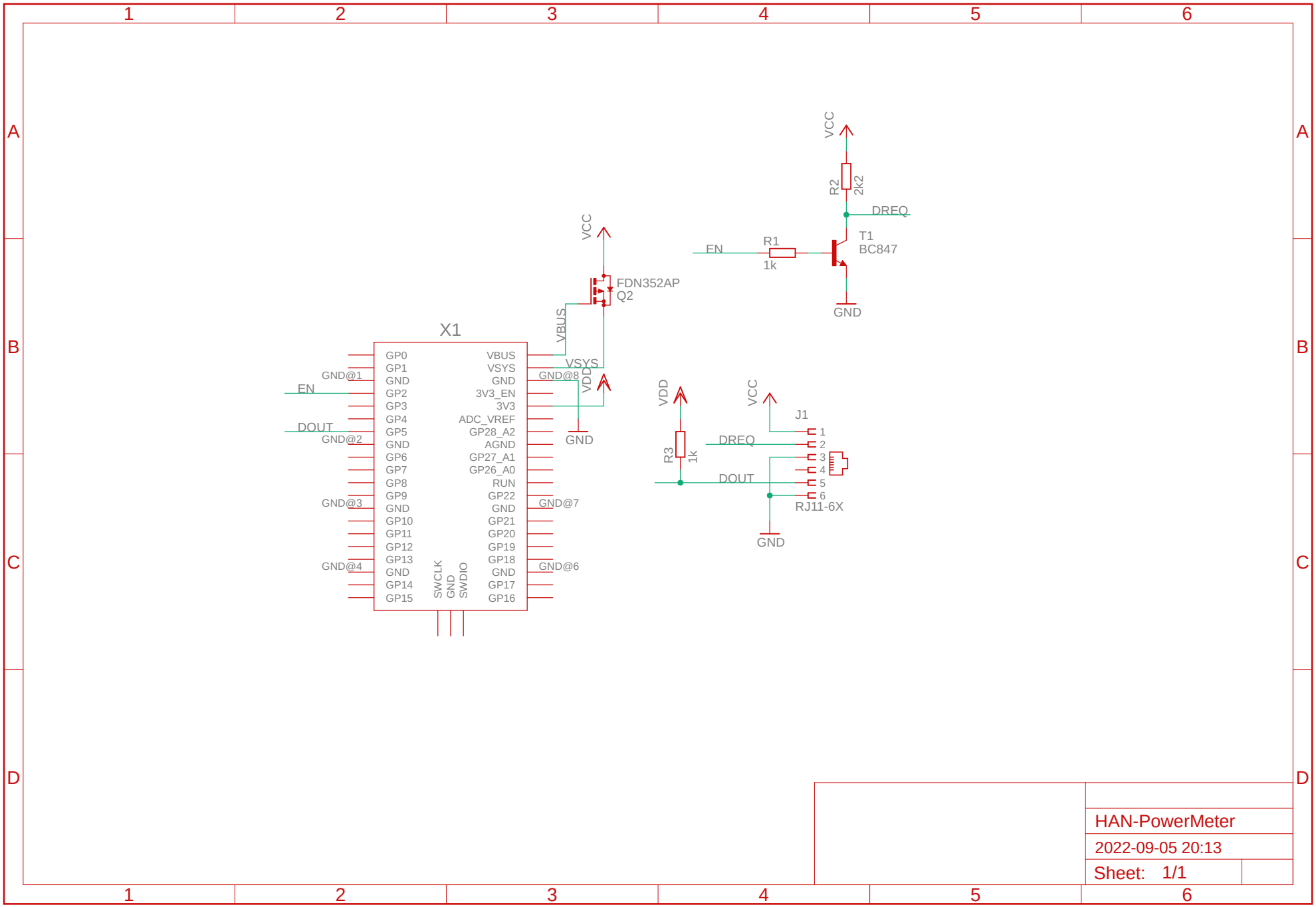
X1
GP0
GP1
GND
GP2
GP3
GP4
GP5
GND
GP6
GP7
GP8
GP9
GND
GP10
GP11
GP12
GP13
GND
GP14
GP15
VBUS
VSYS
GND
3V3_EN
3V3
ADC_VREF
GP28_A2
AGND
GP27_A1
GP26_A0
RUN
GP22
GND
GP21
GP20
GP19
GP18
GND
GP17
GP16
SWCLK
GND
SWDIO
GND@1
EN
DOUT
GND@2
GND@3
GND@4
GND@8
GND@7
GND@6
VCC
FDN352AP
Q2
VBUS
VSYS
VDD
GND
VCC
R2
2k2
DREQ
EN
R1
1k
T1
BC847
GND
VDD
R3
1k
VCC
J1
DREQ
DOUT
1
2
3
4
5
6
RJ11-6X
GND
HAN-PowerMeter
2022-09-05 20:13
Sheet: 1/1