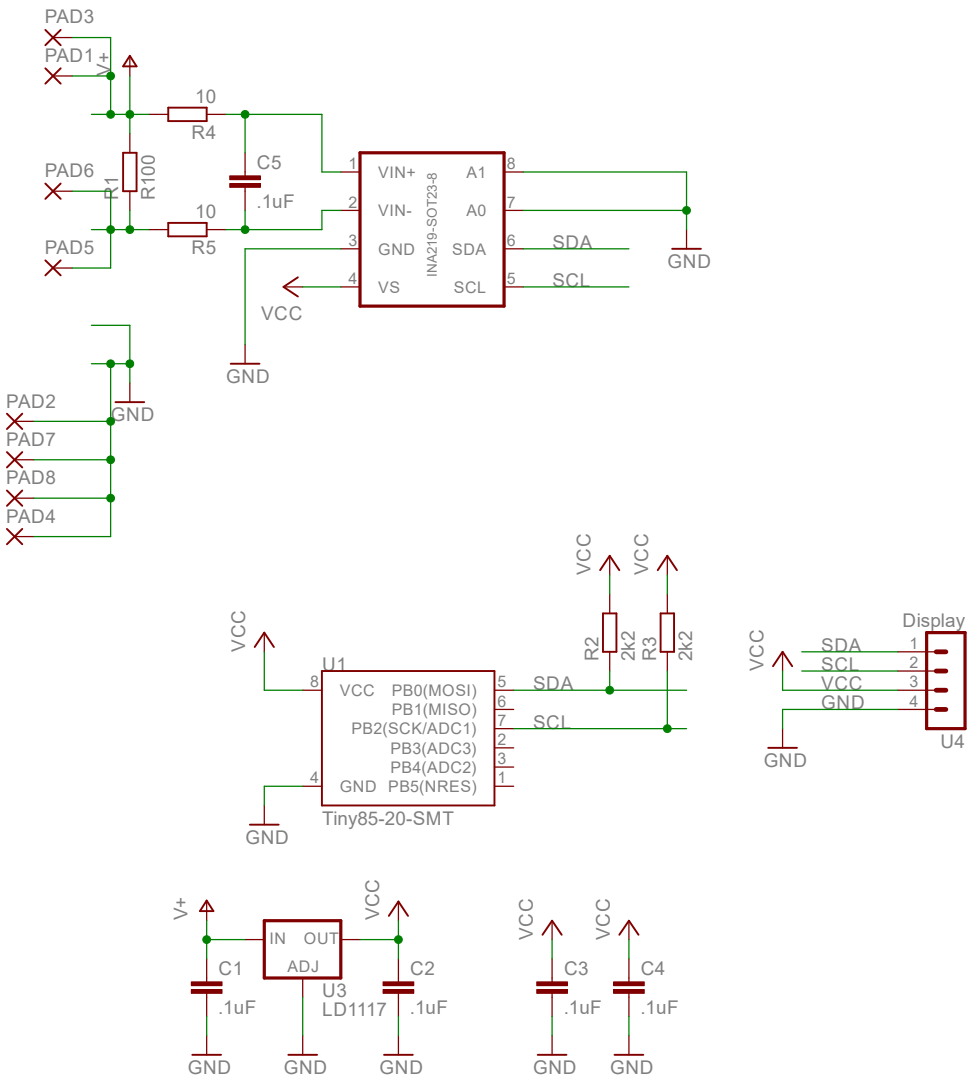

CurrentLogger

2017-03-26 14:46:21

Sheet: 1/1