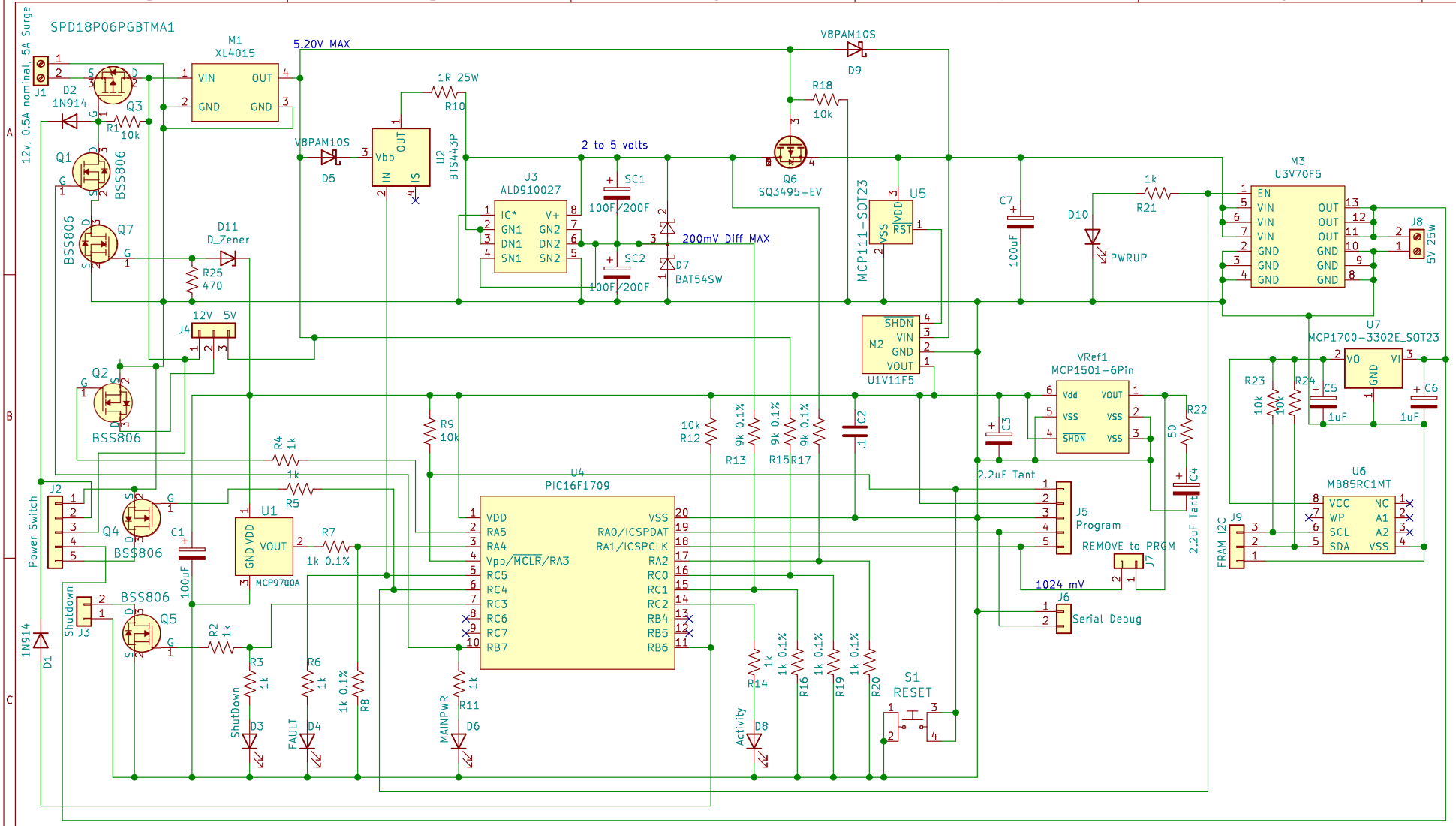

Validated footprints
Added C7
Added Q7 and D11 to monitor PIC power. Below 3v3 will
not allow splurious signals to bootstrap Q3

Crius Technology Group

Sheet: /
File: power_supply.sch

Title: CommCube Power Supply

Size: USLetter	Date: 2021-09-26	**Rev: 1.01**
KiCad E.D.A. kicad 5.1.9+dfsg1-1		Id: 1/1