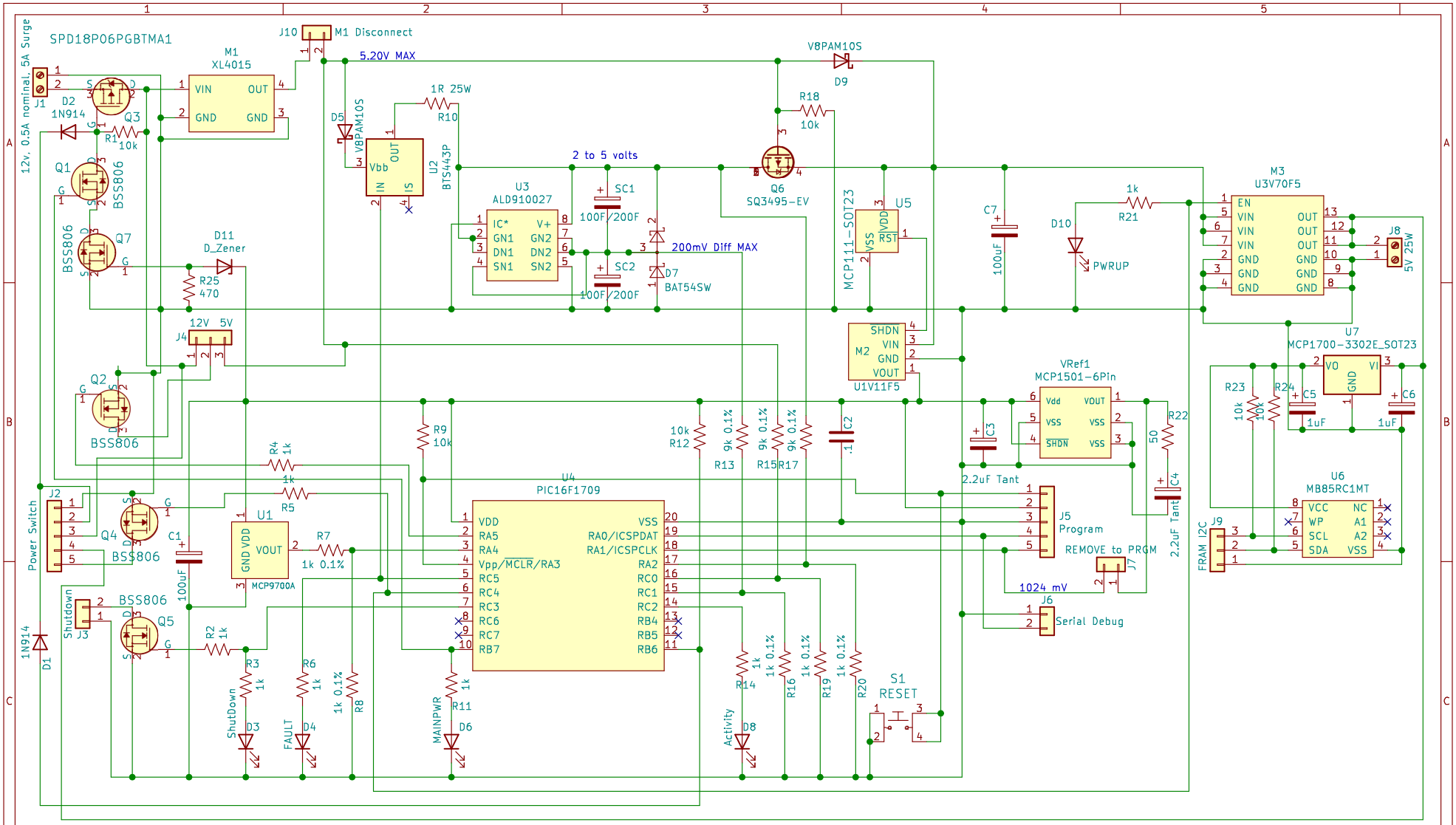


Validated footprints
Added M1 Disconnect J10
Added C7, Q7 and D11 to monitor PIC power. Below 3v3 will not allow splurious signals to bootstrap Q3

**Crius Technology Group**

Sheet: /
File: power_supply.sch

**Title: CommCube Power Supply**

| | | |
|---|---|---|
| Size: USLetter | Date: 2021-09-26 | **Rev: 1.02** |
| KiCad E.D.A. kicad 5.1.9+dfsg1-1 | | Id: 1/1 |