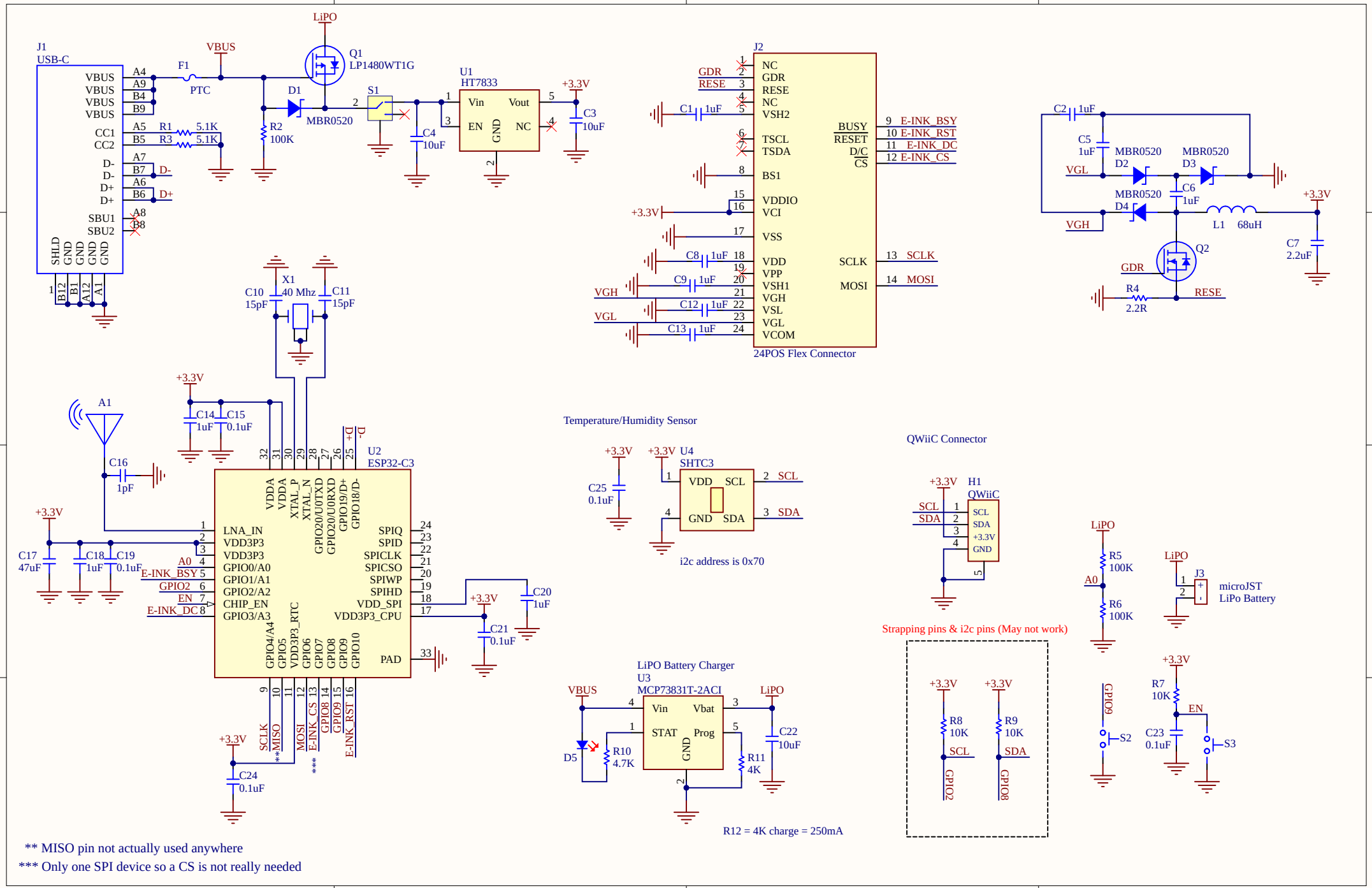
J1
USB-C
VBUS
CC1
CC2
D-
D+
SBU1
SBU2
SHLD
GND
F1
PTC
R1 5.1K
R3 5.1K
R2 100K
D1
MBR0520
Q1
LP1480WT1G
LiPO
S1
U1
HT7833
Vin
Vout
EN
NC
C4 10uF
C3 10uF
+3.3V
J2
24POS Flex Connector
GDR
RESE
VGH
VGL
VCOM
BUSY
RESET
D/C
CS
SCLK
MOSI
E-INK_BSY
E-INK_RST
E-INK_DC
E-INK_CS
C1 1uF
C8 1uF
C9 1uF
C12 1uF
C13 1uF
C2 1uF
C5 1uF
C6 1uF
MBR0520
D2
D3
D4
L1 68uH
C7 2.2uF
Q2
R4 2.2R
X1
40 Mhz
C10 15pF
C11 15pF
C14 1uF
C15 0.1uF
A1
C16 1pF
U2
ESP32-C3
LNA_IN
VDD3P3
GPIO0/A0
GPIO1/A1
GPIO2/A2
CHIP_EN
GPIO3/A3
GPIO4/A4
GPIO5
VDD3P3_RTC
GPIO6
GPIO7
GPIO8
GPIO9
GPIO10
VDDA
XTAL_P
XTAL_N
GPIO20/U0TXD
GPIO20/U0RXD
GPIO19/D+
GPIO18/D-
SPIQ
SPID
SPICLK
SPICSO
SPIWP
SPIHID
VDD_SPI
VDD3P3_CPU
PAD
C17 47uF
C18 1uF
C19 0.1uF
C20 1uF
C21 0.1uF
C24 0.1uF
A0
GPIO2
EN
SCLK
MISO
MOSI
Temperature/Humidity Sensor
U4
SHTC3
VDD
SCL
GND
SDA
C25 0.1uF
i2c address is 0x70
QWiiC Connector
H1
QWiiC
+3.3V
GND
LiPO Battery Charger
U3
MCP73831T-2ACI
Vin
Vbat
STAT
Prog
GND
VBUS
D5
R10 4.7K
R11 4K
C22 10uF
R12 = 4K charge = 250mA
Strapping pins & i2c pins (May not work)
R8 10K
R9 10K
GPIO2
GPIO8
R5 100K
R6 100K
GPIO9
S2
J3
microJST
LiPo Battery
R7 10K
C23 0.1uF
S3
** MISO pin not actually used anywhere
*** Only one SPI device so a CS is not really needed