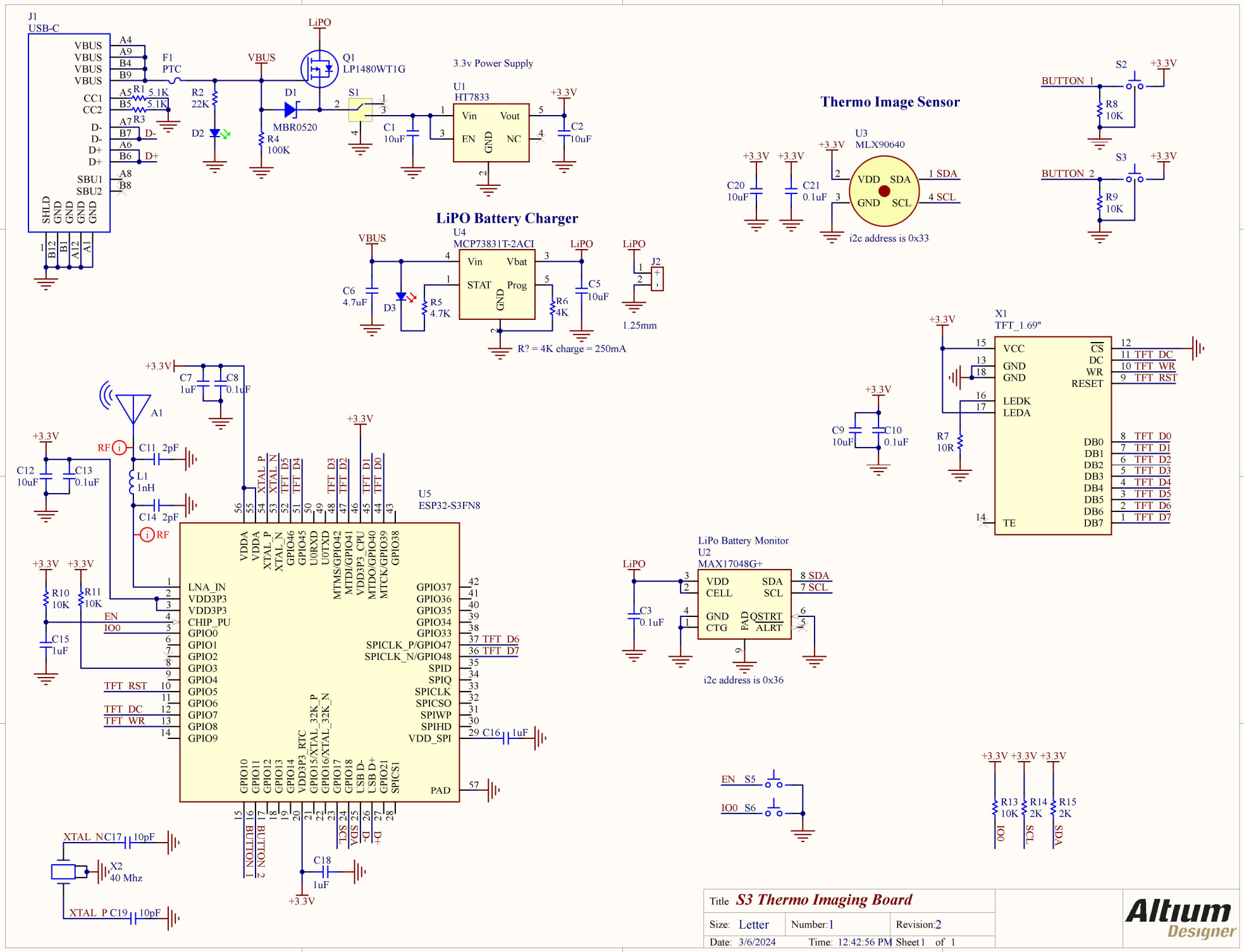
J1
USB-C
VBUS
CC1
CC2
D-
D+
SBU1
SBU2
SHLD
GND
F1
PTC
R1 5.1K
R2 22K
R3 5.1K
D2
D1
MBR0520
R4 100K
Q1
LP1480WT1G
LiPO
S1
3.3v Power Supply
U1
HT7833
Vin
Vout
EN
GND
NC
C1 10uF
C2 10uF
+3.3V
LiPO Battery Charger
U4
MCP73831T-2ACI
Vin
Vbat
STAT
Prog
GND
C6 4.7uF
D3
R5 4.7K
R6 4K
C5 10uF
J2
1.25mm
R? = 4K charge = 250mA
Thermo Image Sensor
U3
MLX90640
VDD
SDA
GND
SCL
C20 10uF
C21 0.1uF
i2c address is 0x33
S2
BUTTON 1
R8 10K
S3
BUTTON 2
R9 10K
X1
TFT_1.69"
VCC
GND
LEDK
LEDA
TE
CS
DC
WR
RESET
DB0
DB1
DB2
DB3
DB4
DB5
DB6
DB7
TFT_DC
TFT_WR
TFT_RST
TFT_D0
TFT_D1
TFT_D2
TFT_D3
TFT_D4
TFT_D5
TFT_D6
TFT_D7
R7 10R
C9 10uF
C10 0.1uF
A1
RF
C11 2pF
L1 1nH
C14 2pF
C7 1uF
C8 0.1uF
C12 10uF
C13 0.1uF
U5
ESP32-S3FN8
LNA_IN
VDD3P3
CHIP_PU
GPIO0
GPIO1
GPIO2
GPIO3
GPIO4
GPIO5
GPIO6
GPIO7
GPIO8
GPIO9
GPIO10
GPIO11
GPIO12
GPIO13
GPIO14
VDD3P3_RTC
GPIO15/XTAL_32K_P
GPIO16/XTAL_32K_N
GPIO17
GPIO18
USB D-
USB D+
GPIO21
SPICS1
GPIO37
GPIO36
GPIO35
GPIO34
GPIO33
SPICLK_P/GPIO47
SPICLK_N/GPIO48
SPID
SPIQ
SPICLK
SPICSO
SPIWP
SPIHD
VDD_SPI
PAD
EN
IO0
R10 10K
R11 10K
C15 1uF
C16 1uF
C18 1uF
XTAL_N C17 10pF
X2
40 Mhz
XTAL_P C19 10pF
LiPo Battery Monitor
U2
MAX17048G+
VDD
CELL
GND
CTG
SDA
SCL
QSTRT
ALRT
C3 0.1uF
i2c address is 0x36
EN S5
IO0 S6
R13 10K
R14 2K
R15 2K
Title S3 Thermo Imaging Board
Size: Letter
Number: 1
Revision: 2
Date: 3/6/2024
Time: 12:42:56 PM
Sheet 1 of 1
Altium Designer