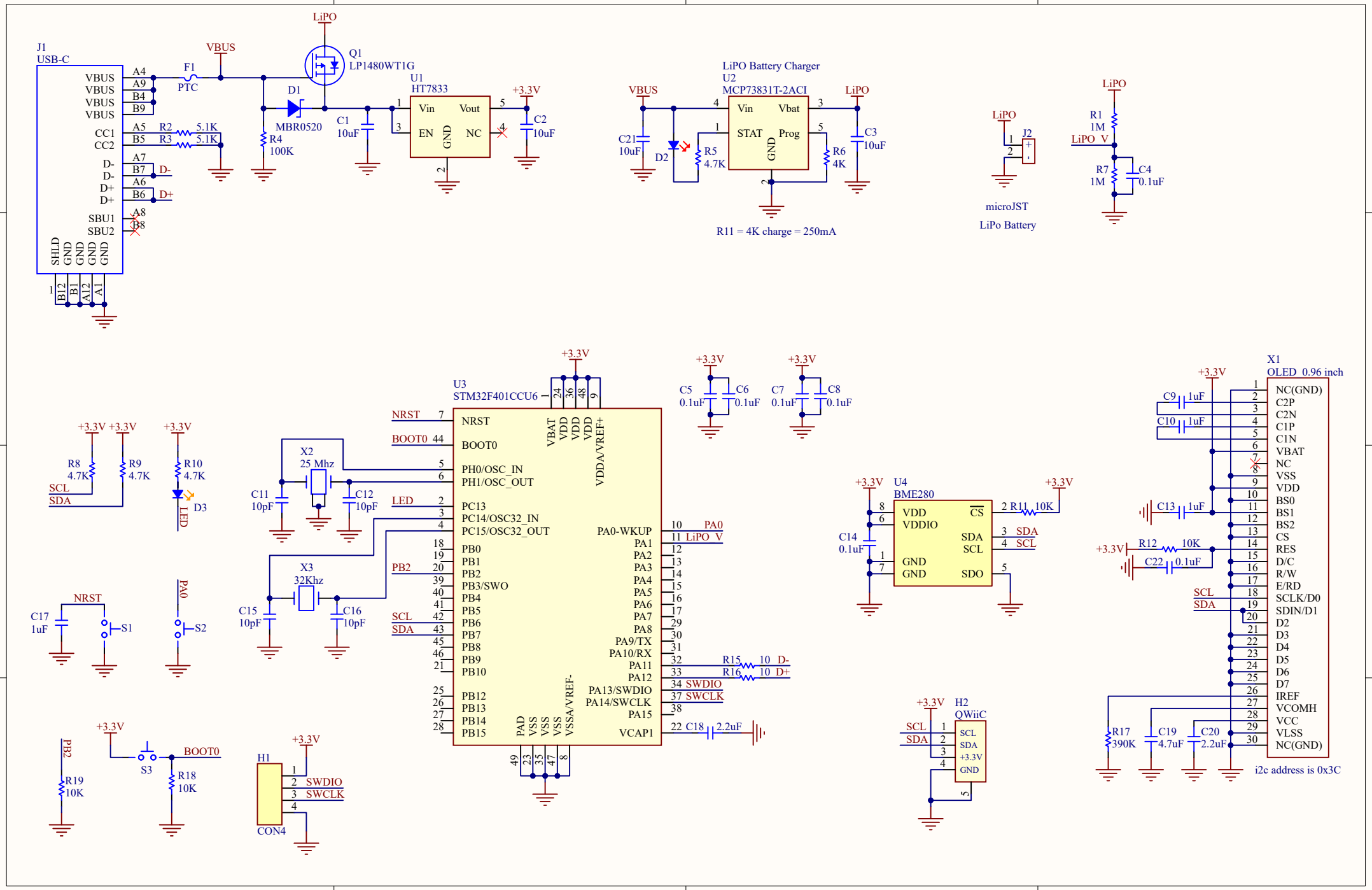
J1
USB-C
VBUS
VBUS
VBUS
VBUS
A4
A9
B4
B9
CC1
CC2
A5
B5
R2
R3
5.1K
5.1K
D-
D-
D+
D+
A7
B7
A6
B6
SBU1
SBU2
A8
B8
SHLD
GND
GND
GND
GND
GND
B12
B1
A12
A1
F1
PTC
VBUS
LiPO
Q1
LP1480WT1G
D1
MBR0520
R4
100K
C1
10uF
U1
HT7833
Vin
Vout
EN
GND
NC
+3.3V
C2
10uF
LiPO Battery Charger
U2
MCP73831T-2ACI
VBUS
Vin
Vbat
STAT
Prog
GND
LiPO
C21
10uF
D2
R5
4.7K
R6
4K
C3
10uF
R11 = 4K charge = 250mA
LiPO
J2
microJST
LiPo Battery
LiPO
R1
1M
LiPO_V
R7
1M
C4
0.1uF
U3
STM32F401CCU6
NRST
BOOT0
PH0/OSC_IN
PH1/OSC_OUT
PC13
PC14/OSC32_IN
PC15/OSC32_OUT
PB0
PB1
PB2
PB3/SWO
PB4
PB5
PB6
PB7
PB8
PB9
PB10
PB12
PB13
PB14
PB15
VBAT
VDD
VDD
VDD
VDD
VDDA/VREF+
PAD
VSS
VSS
VSS
VSSA/VREF-
PA0-WKUP
PA1
PA2
PA3
PA4
PA5
PA6
PA7
PA8
PA9/TX
PA10/RX
PA11
PA12
PA13/SWDIO
PA14/SWCLK
PA15
VCAP1
PA0
LiPO_V
R15
R16
10
10
D-
D+
SWDIO
SWCLK
C18
2.2uF
+3.3V
C5
0.1uF
C6
0.1uF
C7
0.1uF
C8
0.1uF
X2
25 Mhz
C11
10pF
C12
10pF
LED
X3
32Khz
C15
10pF
C16
10pF
SCL
SDA
R8
4.7K
R9
4.7K
R10
4.7K
D3
LED
NRST
C17
1uF
S1
PA0
S2
PB2
R19
10K
S3
BOOT0
R18
10K
H1
CON4
SWDIO
SWCLK
U4
BME280
VDD
VDDIO
GND
GND
CS
SDA
SCL
SDO
R11
10K
C14
0.1uF
H2
QWiiC
SCL
SDA
+3.3V
GND
X1
OLED 0.96 inch
NC(GND)
C2P
C2N
C1P
C1N
VBAT
NC
VSS
VDD
BS0
BS1
BS2
CS
RES
D/C
R/W
E/RD
SCLK/D0
SDIN/D1
D2
D3
D4
D5
D6
D7
IREF
VCOMH
VCC
VLSS
NC(GND)
C9
1uF
C10
1uF
C13
1uF
R12
10K
C22
0.1uF
R17
390K
C19
4.7uF
C20
2.2uF
i2c address is 0x3C