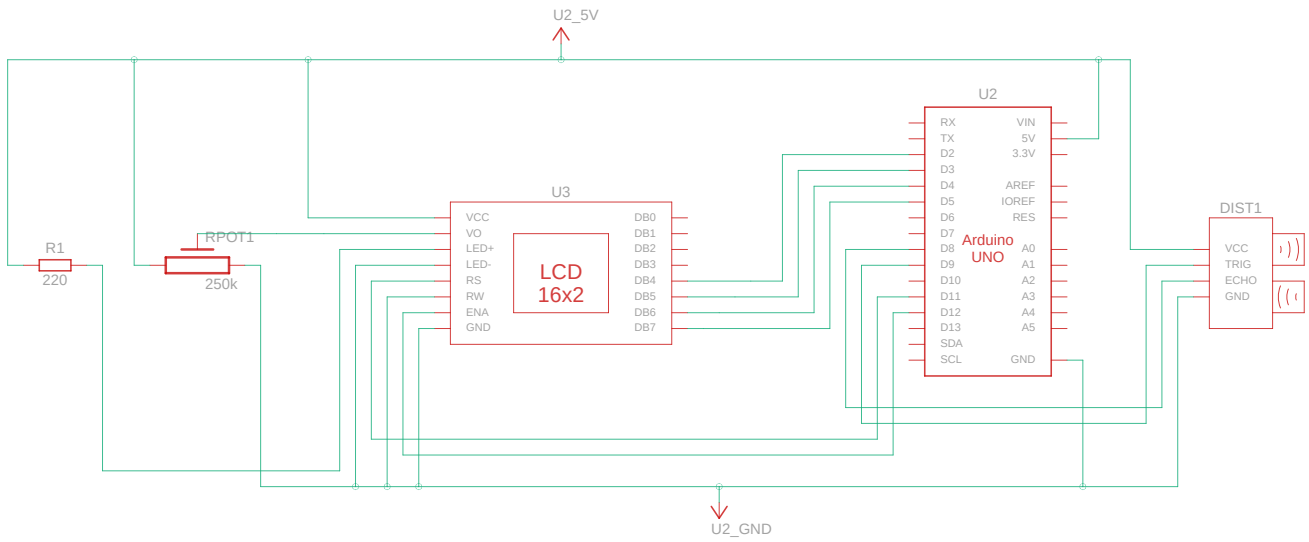

Made with Tinkercad®

Title: Laptimer	
Date: 24/05/2023, 19:43:22	Sheet: 1/1