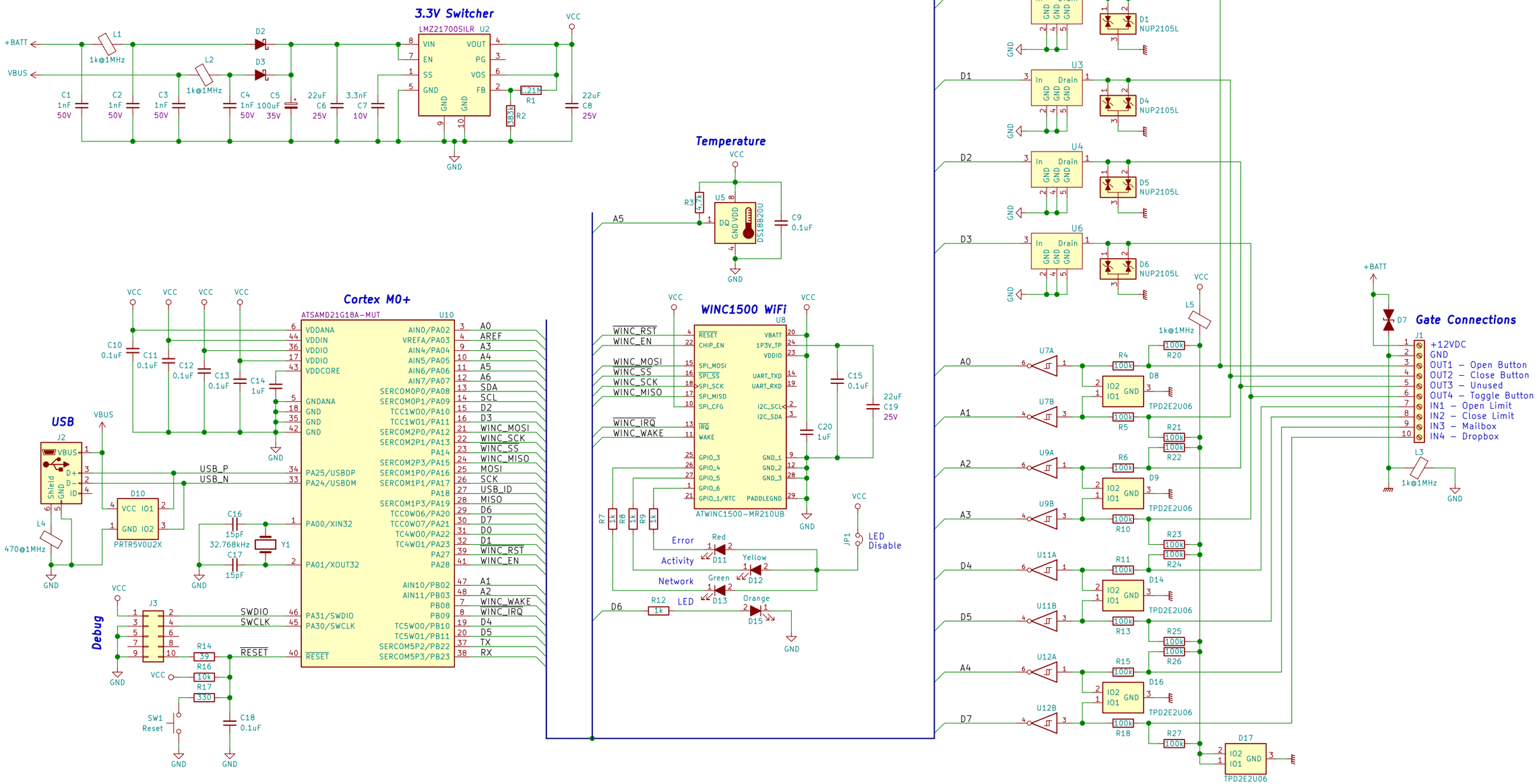

1. This board is compatible with the Arduino MKR1000 board which directly supports the ATWINC1500 WiFi module.
2. The SAMD21G18 does not have extra filtering on the analog power supply so analog measurements may be ideal.
3. When the bootloader is running D2 is turned into an output which will drive O3. Only occurs when programming or double-tap reset.
4. R20-R27 pullups are used as needed. For US Automatic gate no pullups are needed.
5. Personal gate has a switch connected to mailbox and package dropbox so R26 and R27 are populated.

Mike Lawrence

Sheet: /
File: WiFi-Gate-Controller.sch

Title: WiFi Gate Controller

Size: B	Date: April 2018	Rev: 1.0
KiCad E.D.A. kicad (5.0.0-3-g0214c9d)		Id: 1/1