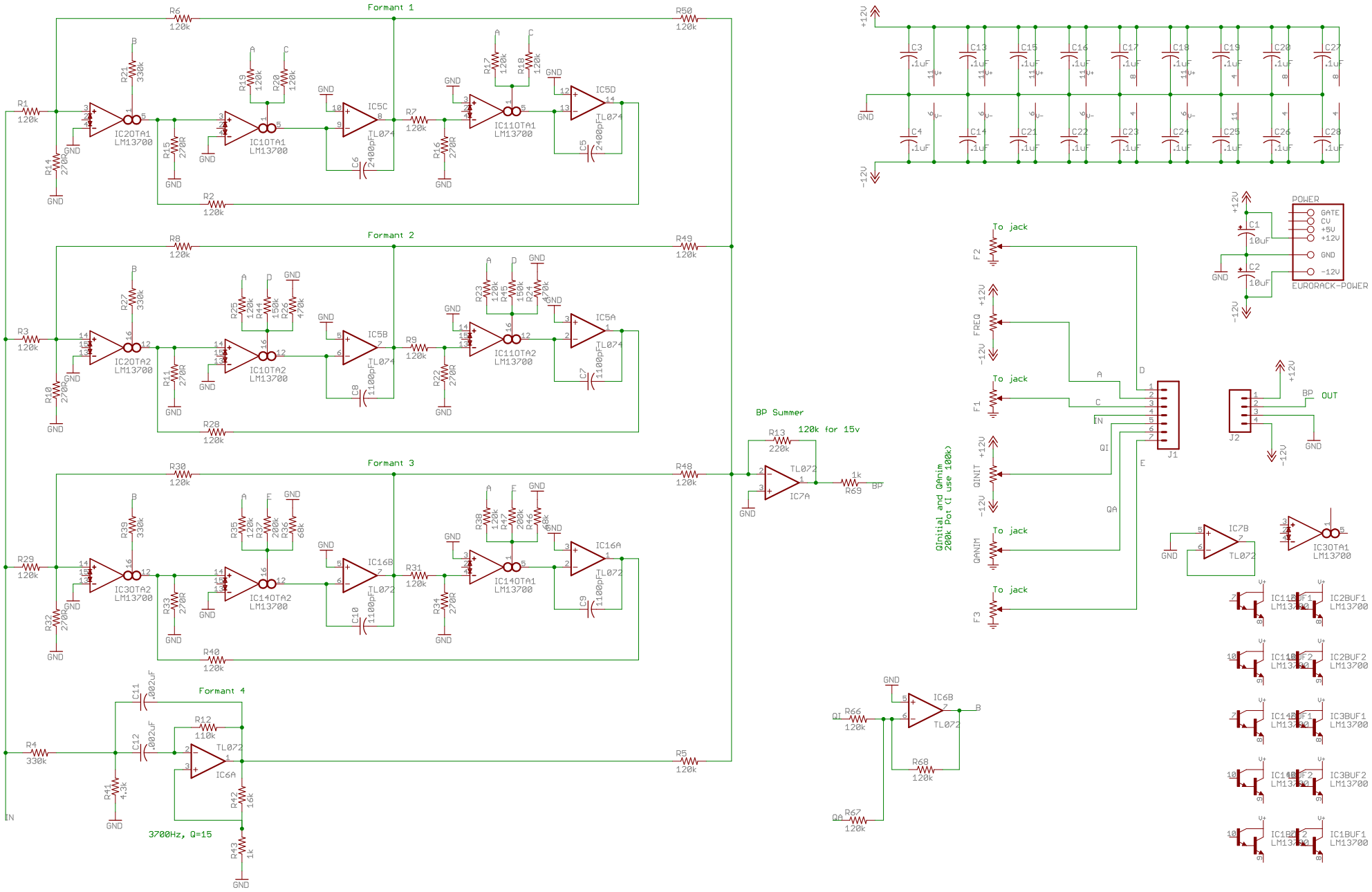
Formant 1
Formant 2
Formant 3
Formant 4
BP Summer
120k for 15v
3700Hz, Q=15
IC20TA1 LM13700
IC10TA1 LM13700
IC110TA1 LM13700
IC20TA2 LM13700
IC10TA2 LM13700
IC110TA2 LM13700
IC30TA2 LM13700
IC140TA2 LM13700
IC140TA1 LM13700
IC30TA1 LM13700
IC5C TL074
IC5D TL074
IC5B TL074
IC5A TL074
IC16B TL072
IC16A TL072
IC7A TL072
IC6A TL072
IC6B TL072
IC7B TL072
IC11BUF1 LM13700
IC11BUF2 LM13700
IC2BUF1 LM13700
IC2BUF2 LM13700
IC14BUF1 LM13700
IC14BUF2 LM13700
IC3BUF1 LM13700
IC3BUF2 LM13700
IC1BUF2 LM13700
IC1BUF1 LM13700
POWER
GATE
CV
+5V
+12V
GND
-12V
EURORACK-POWER
To jack
FREQ
QINIT
QANIM
QInitial and QAnim 200k Pot (I use 100k)
J1
J2
BP
OUT
IN
QI
QA
E