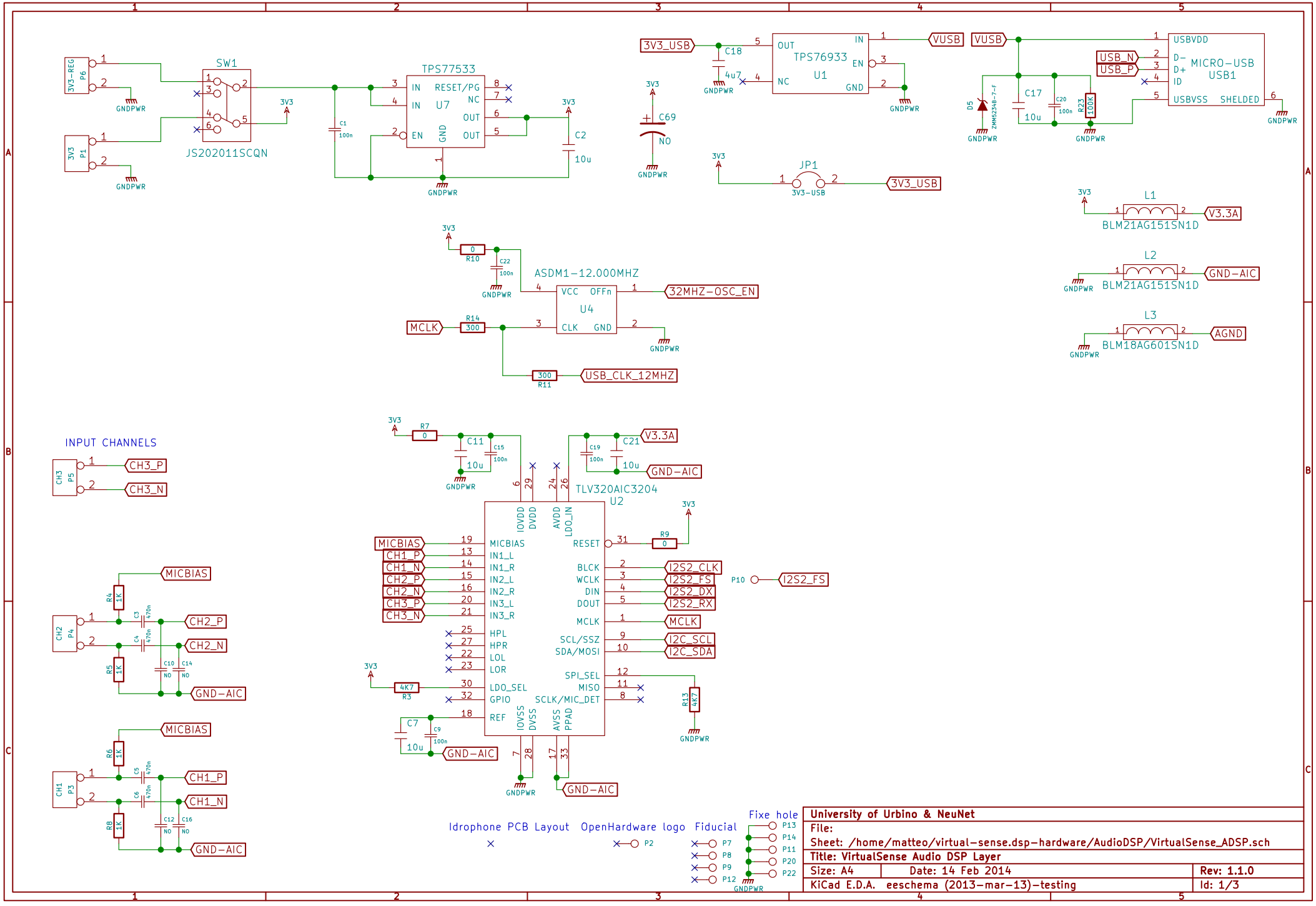
SW1
JS202011SCQN
TPS77533
U7
IN
RESET/PG
NC
OUT
EN
GND
3V3
C1
100n
C2
10u
GNDPWR
3V3_USB
C18
4u7
TPS76933
U1
OUT
IN
EN
NC
GND
VUSB
C69
NO
JP1
3V3-USB
MICRO-USB
USB1
USBVDD
D-
D+
ID
USBVSS
SHELDED
USB_N
USB_P
D5
ZMM52348-7-F
C17
10u
C20
100n
R23
100K
L1
BLM21AG151SN1D
V3.3A
L2
BLM21AG151SN1D
GND-AIC
L3
BLM18AG601SN1D
AGND
R10
0
C22
100n
ASDM1-12.000MHZ
U4
VCC
OFFn
CLK
GND
32MHZ-OSC_EN
MCLK
R14
300
R11
300
USB_CLK_12MHZ
INPUT CHANNELS
CH3
P5
CH3_P
CH3_N
R7
0
C11
10u
C15
100n
C19
100n
C21
10u
TLV320AIC3204
U2
IOVDD
DVDD
AVDD
LDO_IN
MICBIAS
IN1_L
IN1_R
IN2_L
IN2_R
IN3_L
IN3_R
HPL
HPR
LOL
LOR
LDO_SEL
GPIO
REF
RESET
BLCK
WCLK
DIN
DOUT
MCLK
SCL/SSZ
SDA/MOSI
SPI_SEL
MISO
SCLK/MIC_DET
IOVSS
DVSS
AVSS
PPAD
R9
0
I2S2_CLK
I2S2_FS
I2S2_DX
I2S2_RX
I2C_SCL
I2C_SDA
P10
R3
4K7
R13
4K7
C7
10u
C9
100n
CH2
P4
R4
1K
R5
1K
C3
470n
C4
470n
C10
NO
C14
NO
CH1
P3
R6
1K
R8
1K
C5
470n
C6
470n
C12
NO
C16
NO
Idrophone PCB Layout
OpenHardware logo
P2
Fiducial
P7
P8
P9
P12
Fixe hole
P13
P14
P11
P20
P22
University of Urbino & NeuNet
File:
Sheet: /home/matteo/virtual-sense.dsp-hardware/AudioDSP/VirtualSense_ADSP.sch
Title: VirtualSense Audio DSP Layer
Size: A4
Date: 14 Feb 2014
Rev: 1.1.0
KiCad E.D.A. eeschema (2013-mar-13)-testing
Id: 1/3

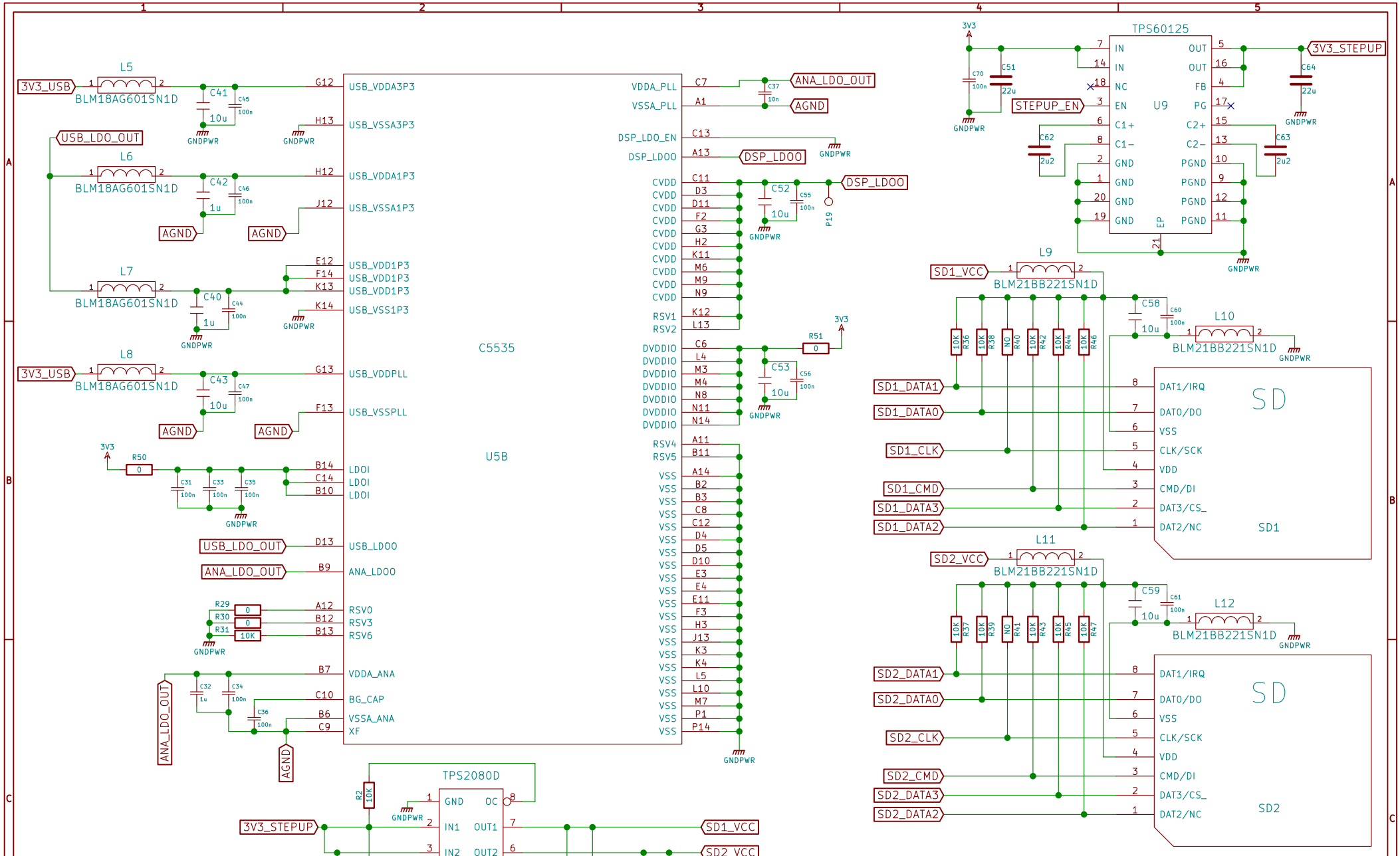

University of Urbino & NeuNet		
File:		
Sheet: VirtualSense_ADSP_3.sch		
Title: VirtualSense Audio DSP Layer		
Size: A4	Date: 14 Feb 2014	Rev: 1.1.0
KiCad E.D.A. eeschema (2013-mar-13)-testing		Id: 2/3

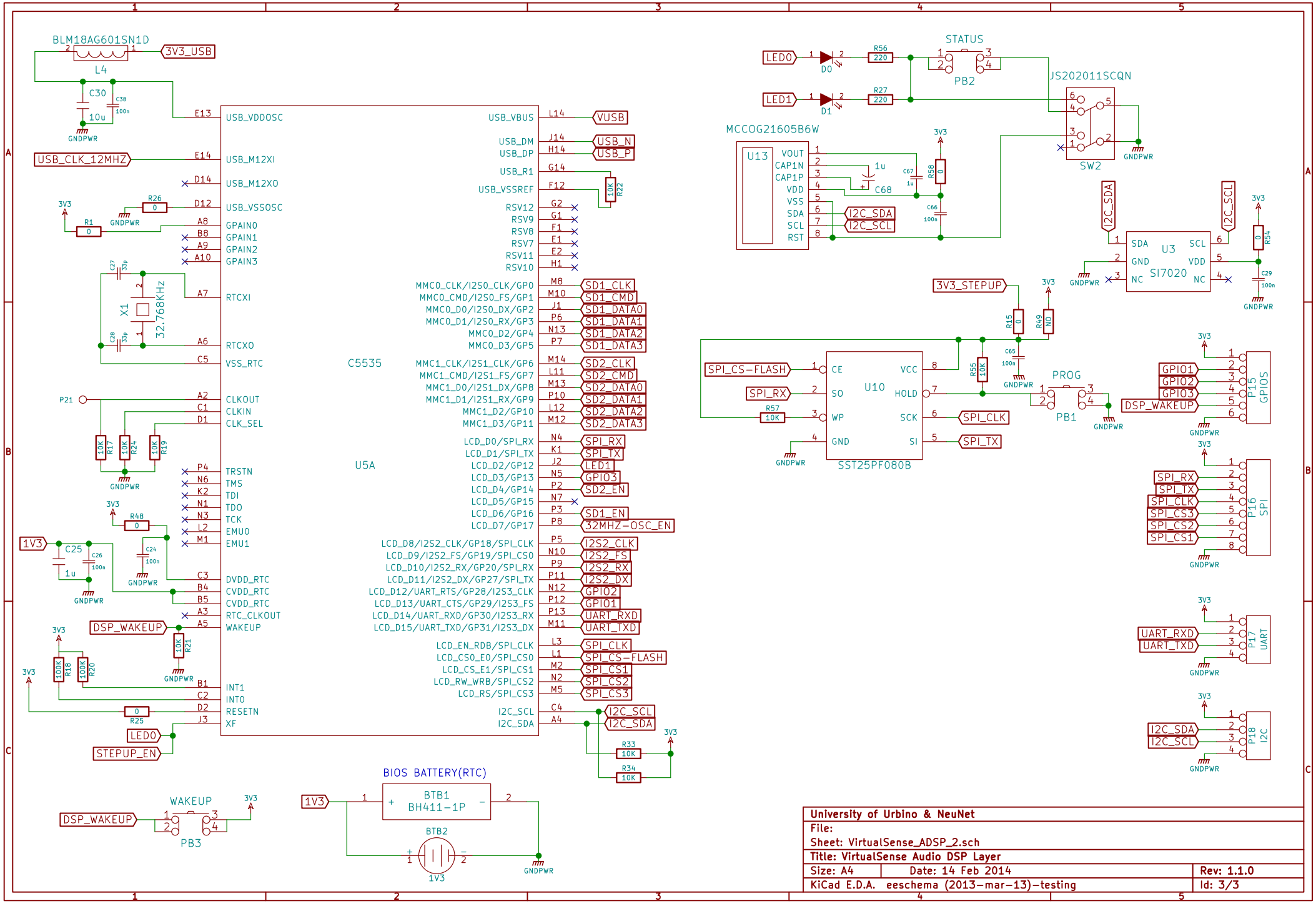

University of Urbino & NeuNet		
File:		
Sheet: VirtualSense_ADSP_2.sch		
Title: VirtualSense Audio DSP Layer		
Size: A4	Date: 14 Feb 2014	Rev: 1.1.0
KiCad E.D.A. eeschema (2013-mar-13)-testing		Id: 3/3