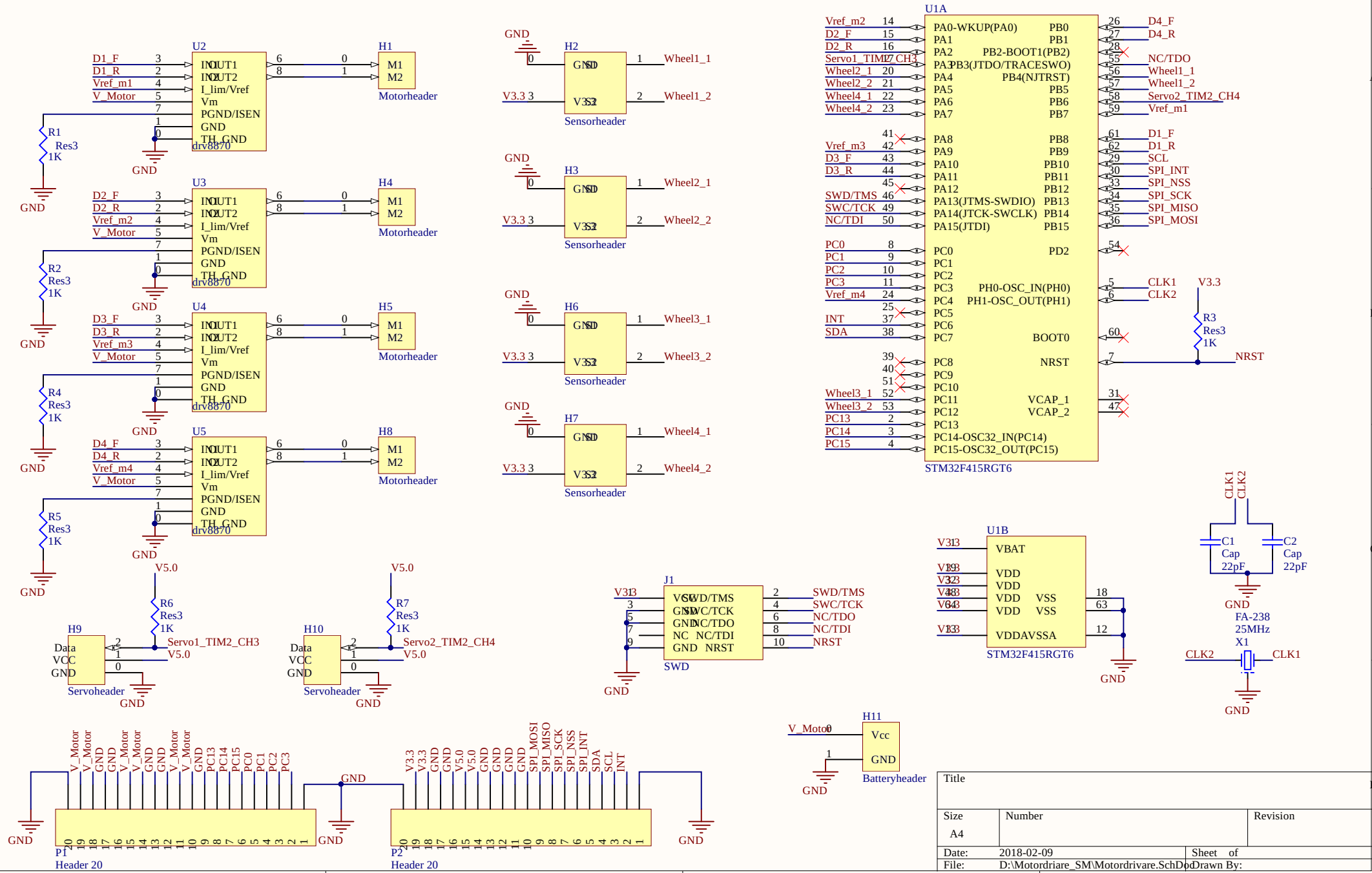
U2
U3
U4
U5
drv8870
H1
H2
H3
H4
H5
H6
H7
H8
Motorheader
Sensorheader
Wheel1_1
Wheel1_2
Wheel2_1
Wheel2_2
Wheel3_1
Wheel3_2
Wheel4_1
Wheel4_2
R1 Res3 1K
R2 Res3 1K
R3 Res3 1K
R4 Res3 1K
R5 Res3 1K
R6 Res3 1K
R7 Res3 1K
V5.0
H9
H10
Servoheader
Servo1_TIM2_CH3
Servo2_TIM2_CH4
GND
U1A
STM32F415RGT6
PA0-WKUP(PA0)
PA2 PB2-BOOT1(PB2)
PA3 PB3(JTDO/TRACESWO)
PA4 PB4(NJTRST)
PA13(JTMS-SWDIO)
PA14(JTCK-SWCLK)
PA15(JTDI)
PC14-OSC32_IN(PC14)
PC15-OSC32_OUT(PC15)
PH0-OSC_IN(PH0)
PH1-OSC_OUT(PH1)
BOOT0
NRST
VCAP_1
VCAP_2
D4_F
D4_R
NC/TDO
Wheel1_1
Wheel1_2
Servo2_TIM2_CH4
Vref_m1
D1_F
D1_R
SCL
SPI_INT
SPI_NSS
SPI_SCK
SPI_MISO
SPI_MOSI
CLK1
CLK2
NRST
U1B
VBAT
VDD
VSS
VDDAVSSA
C1 Cap 22pF
C2 Cap 22pF
FA-238 25MHz
X1
J1
SWD
SWD/TMS
SWC/TCK
NC/TDO
NC/TDI
NRST
H11
Vcc
Batteryheader
V_Motor
P1
Header 20
P2
Header 20
Title
Size
A4
Number
Revision
Date: 2018-02-09
Sheet of
File: D:\Motordriare_SM\Motordrivare.SchDoc
Drawn By: