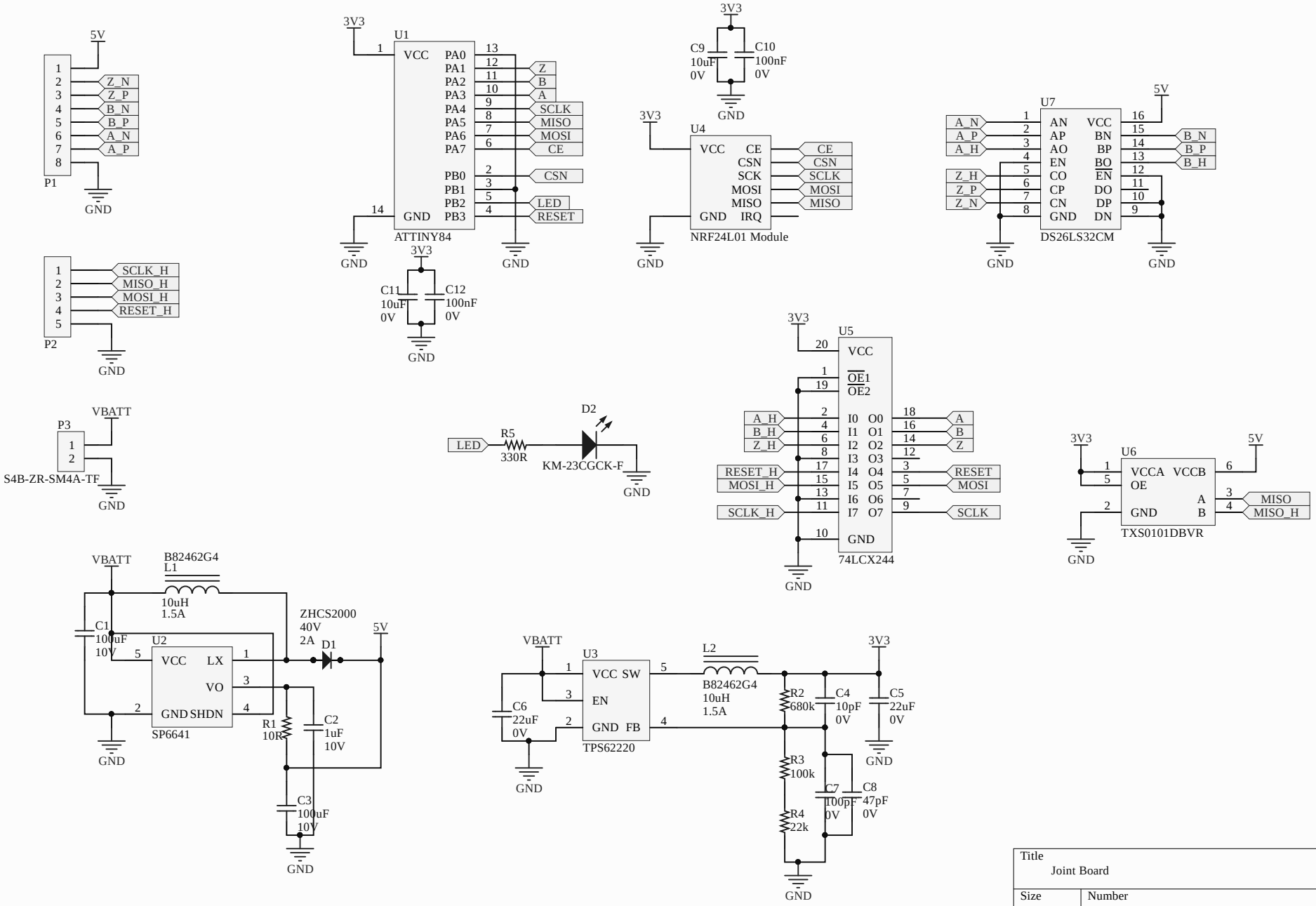

Title Joint Board		
Size A4	Number	Revision 3
Date: 11/10/2017	Sheet 1 of 1	
File: C:\SDUEmbedded\..\joint_board.SchDoc	Drawn By:	