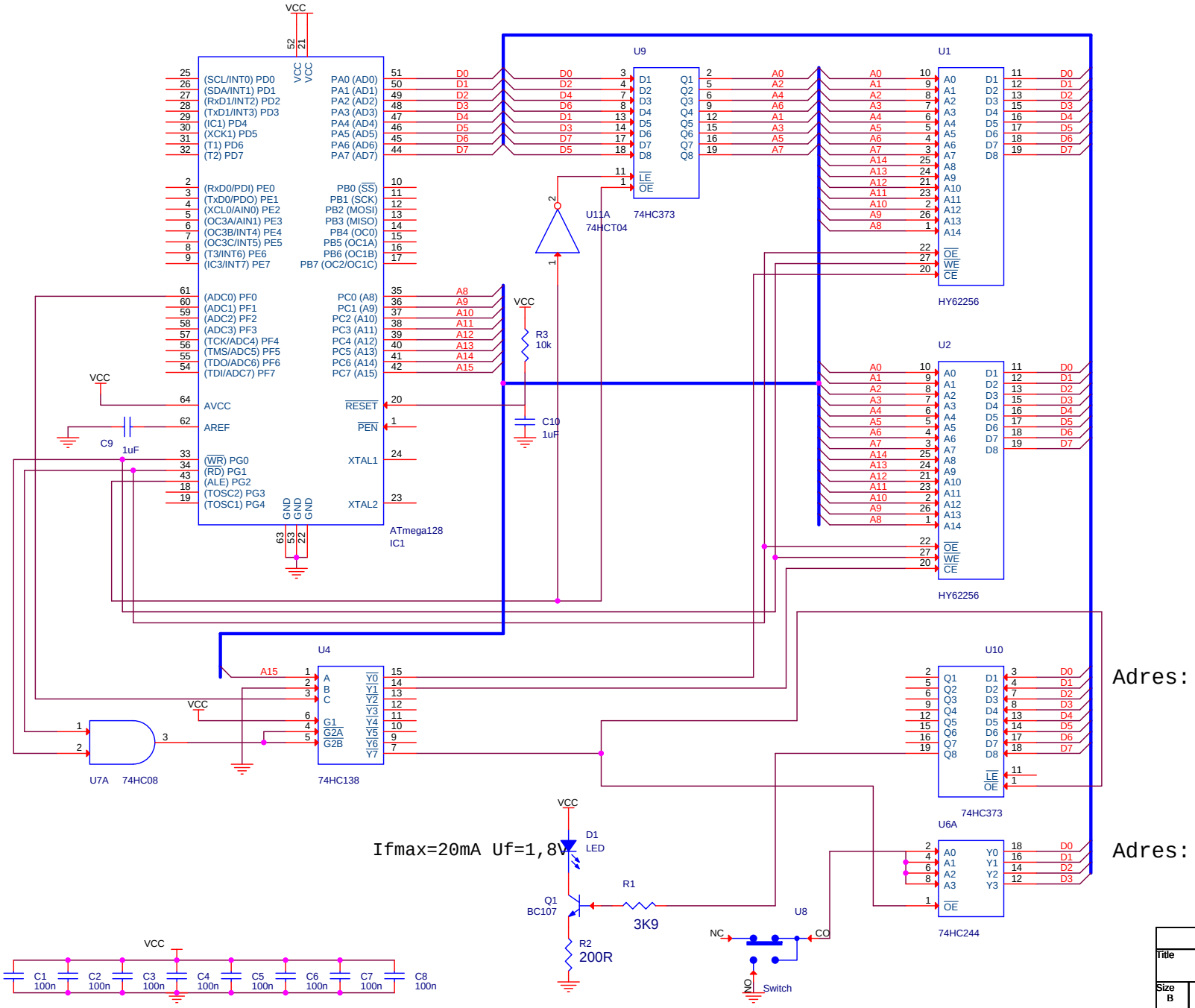

Title	Egzamin SMiW Termin I	
Size B	Document Number Liczba bledow:	Rev 1
Date: Tuesday, June 10, 2014	Sheet 1 of 1	