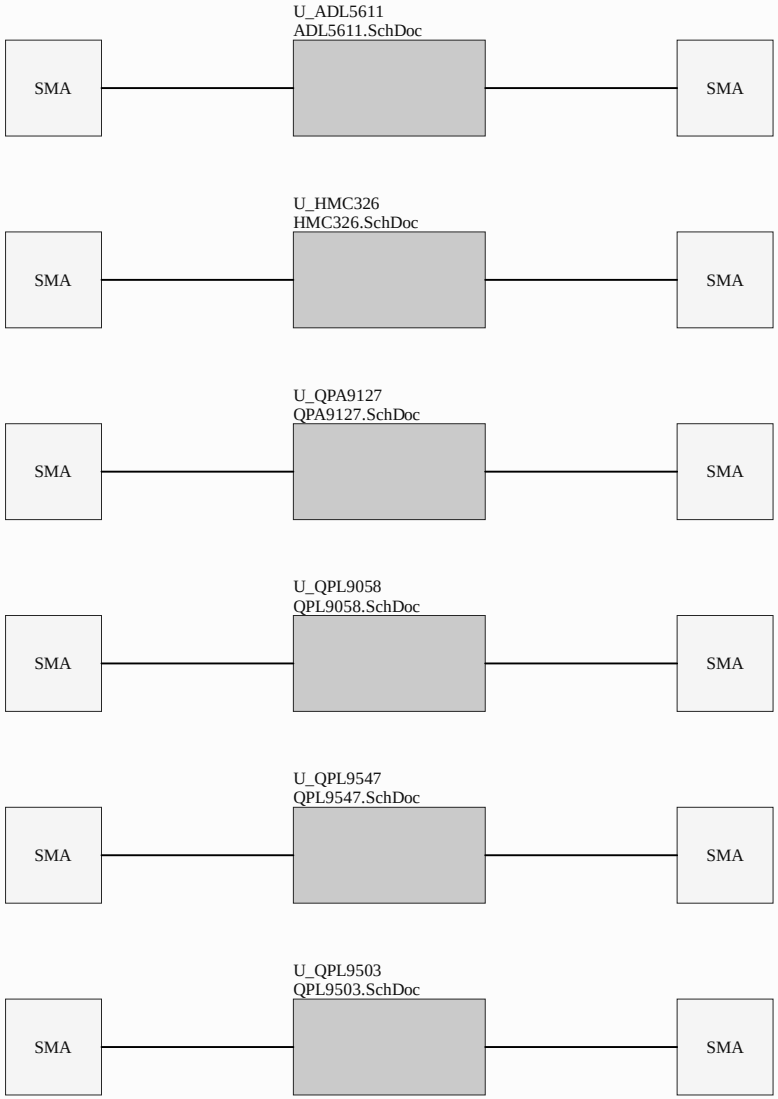

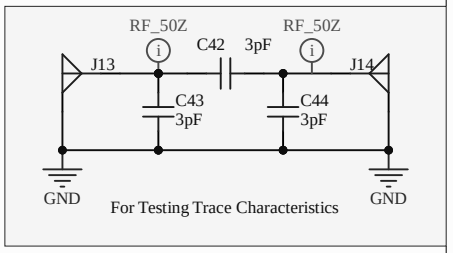

Title	***RF-Test-Board.PrjPcb***	nearloc
Author: Murat Kucukyilmaz	Number: 1	
Date: 23.11.2020	Sheet 1 of 7	

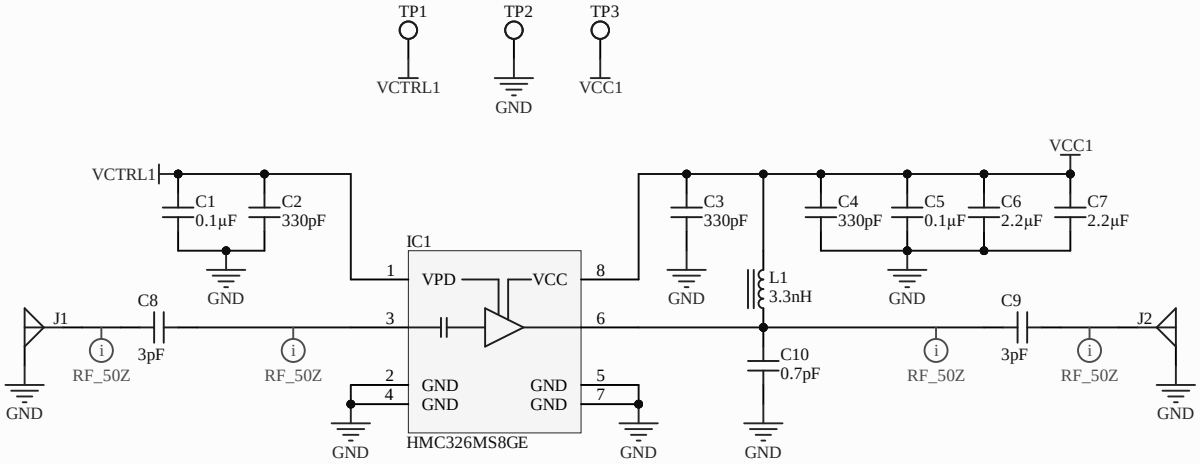

Title	***RF-Test-Board.PrjPcb***	
Author: Murat Kucukyilmaz	Number: 2	
Date: 23.11.2020	Sheet 2 of 7	

nearloc

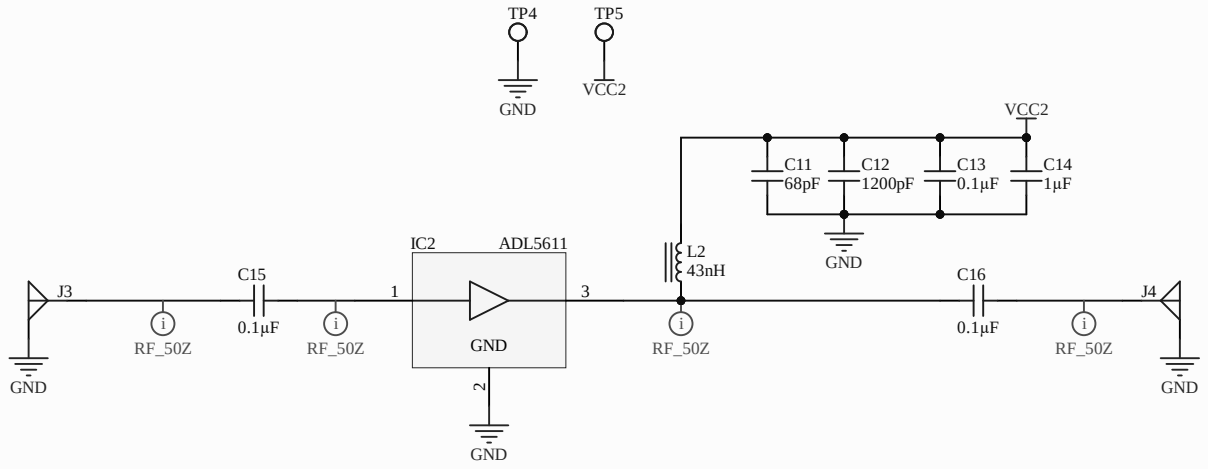

Title	***RF-Test-Board.PrjPcb***	
Author: Murat Kucukyilmaz	Number: 3	
Date: 23.11.2020	Sheet 3 of 7	

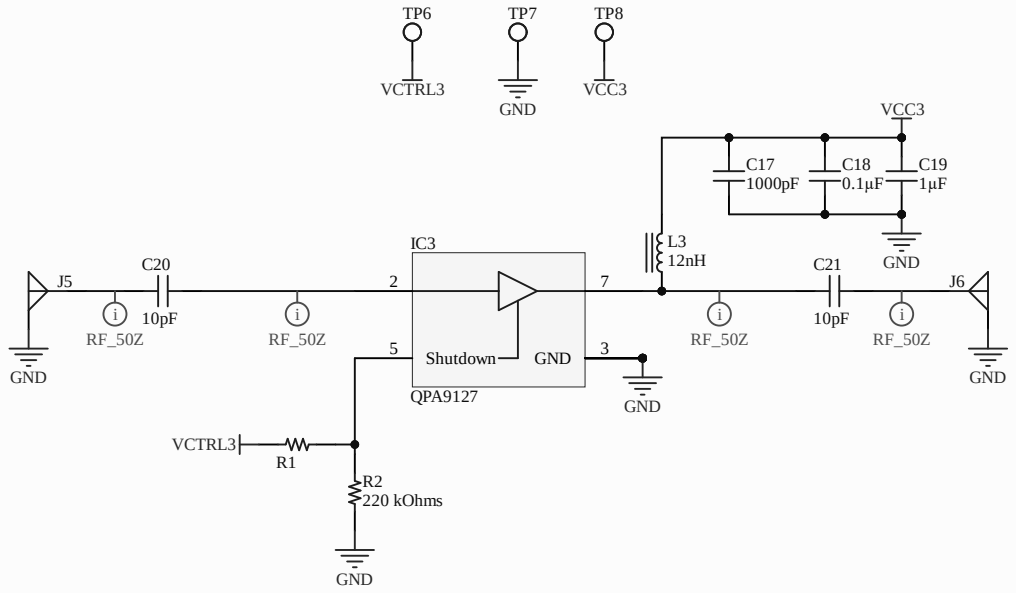

Title	***RF-Test-Board.PrjPcb***	
Author: Murat Kucukyilmaz	Number: 4	
Date: 23.11.2020	Sheet 4 of 7	

nearloc

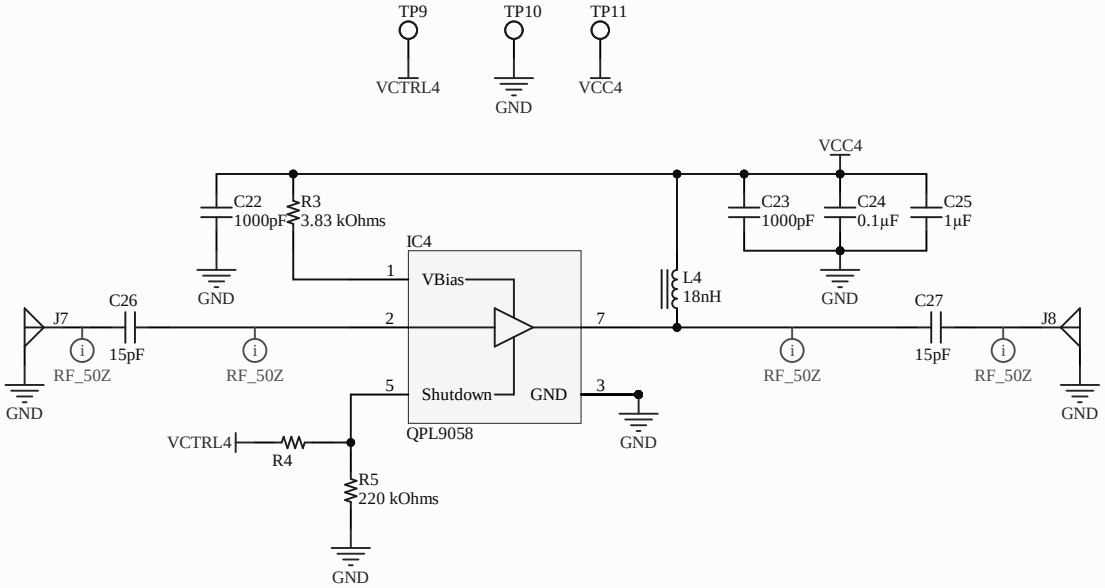

Title	***RF-Test-Board.PrjPcb***	
Author: Murat Kucukyilmaz	Number: 5	
Date: 23.11.2020	Sheet 5 of 7	

nearloc

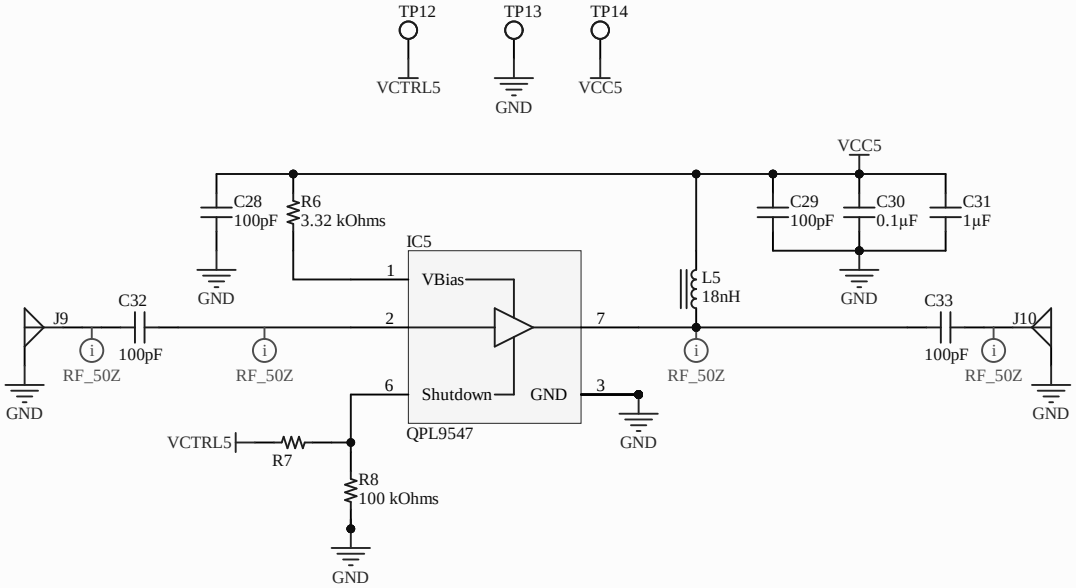

Title	***RF-Test-Board.PrjPcb***	
Author: Murat Kucukyilmaz	Number: 6	
Date: 23.11.2020	Sheet 6 of 7	

nearloc

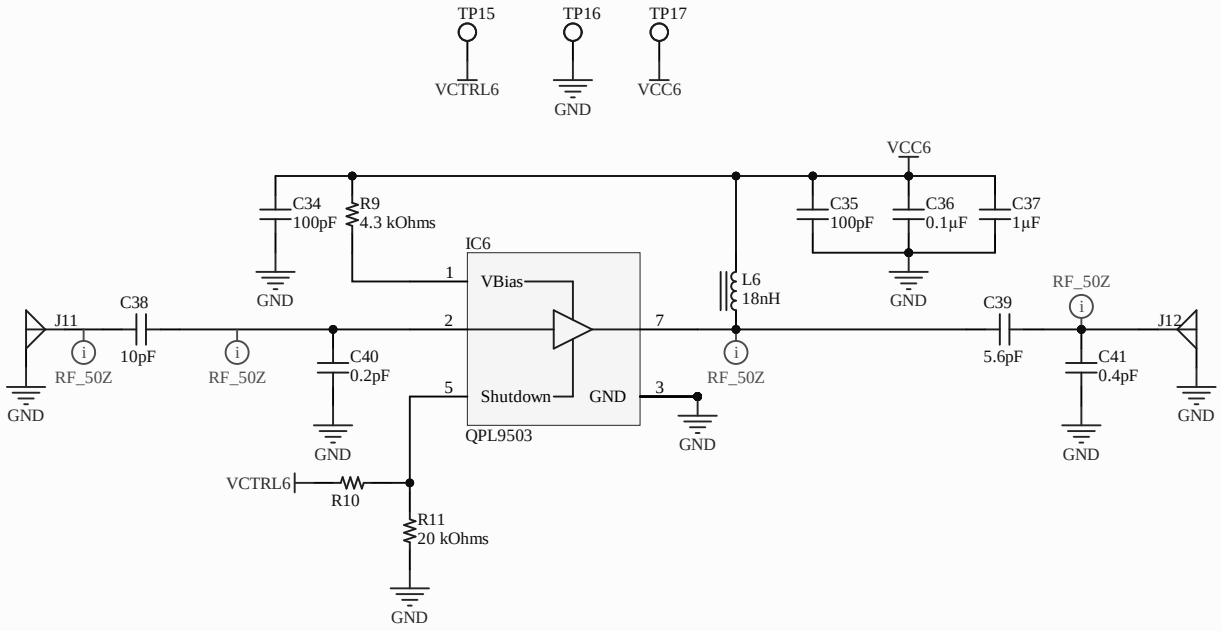

Title	***RF-Test-Board.PrjPcb***
Author: Murat Kucukyilmaz	Number: 7
Date: 23.11.2020	Sheet 7 of 7

nearloc

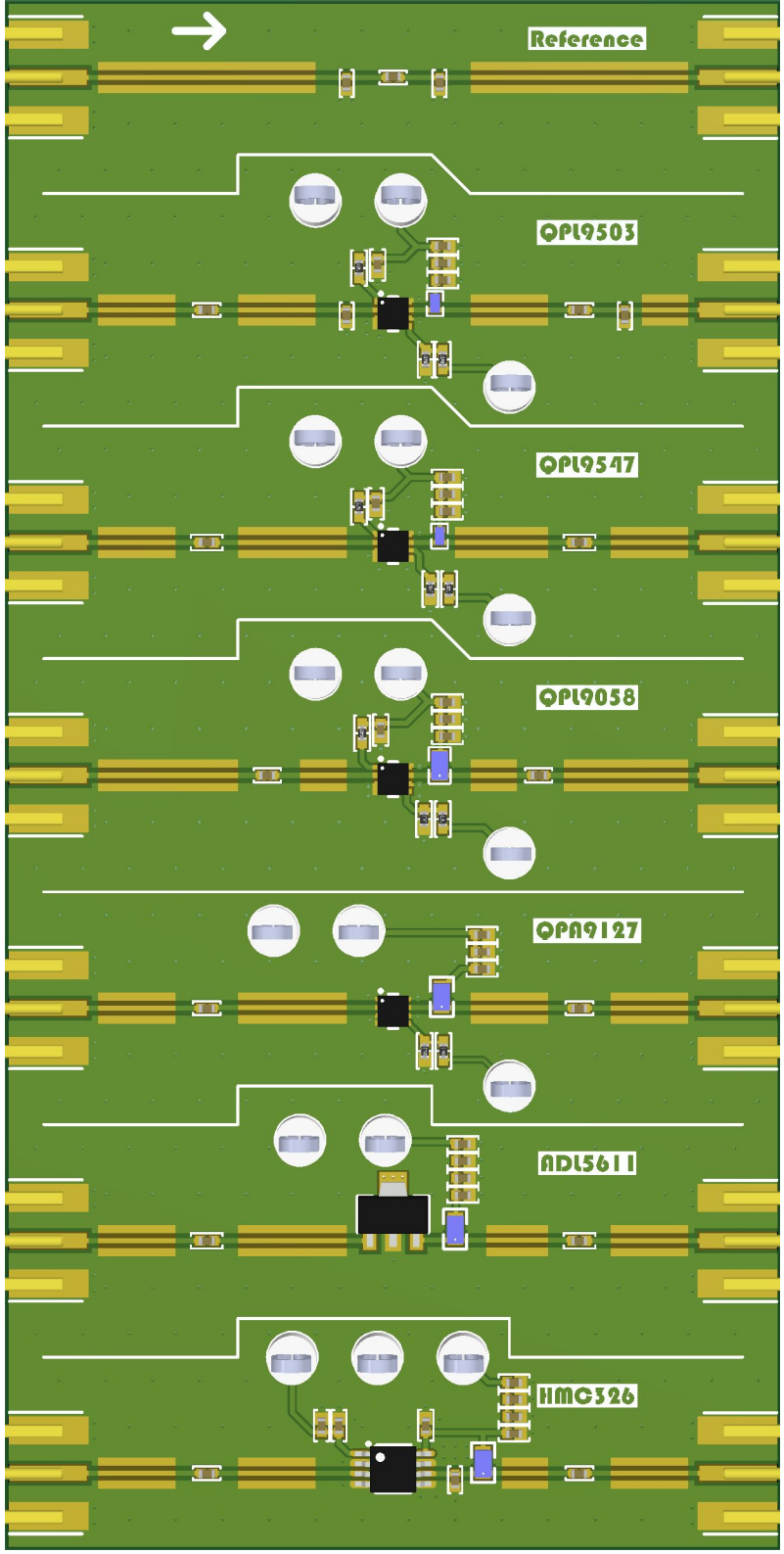
Reference
OPL9503
OPL9547
OPL9058
OPA9127
ADL5611
HMC326

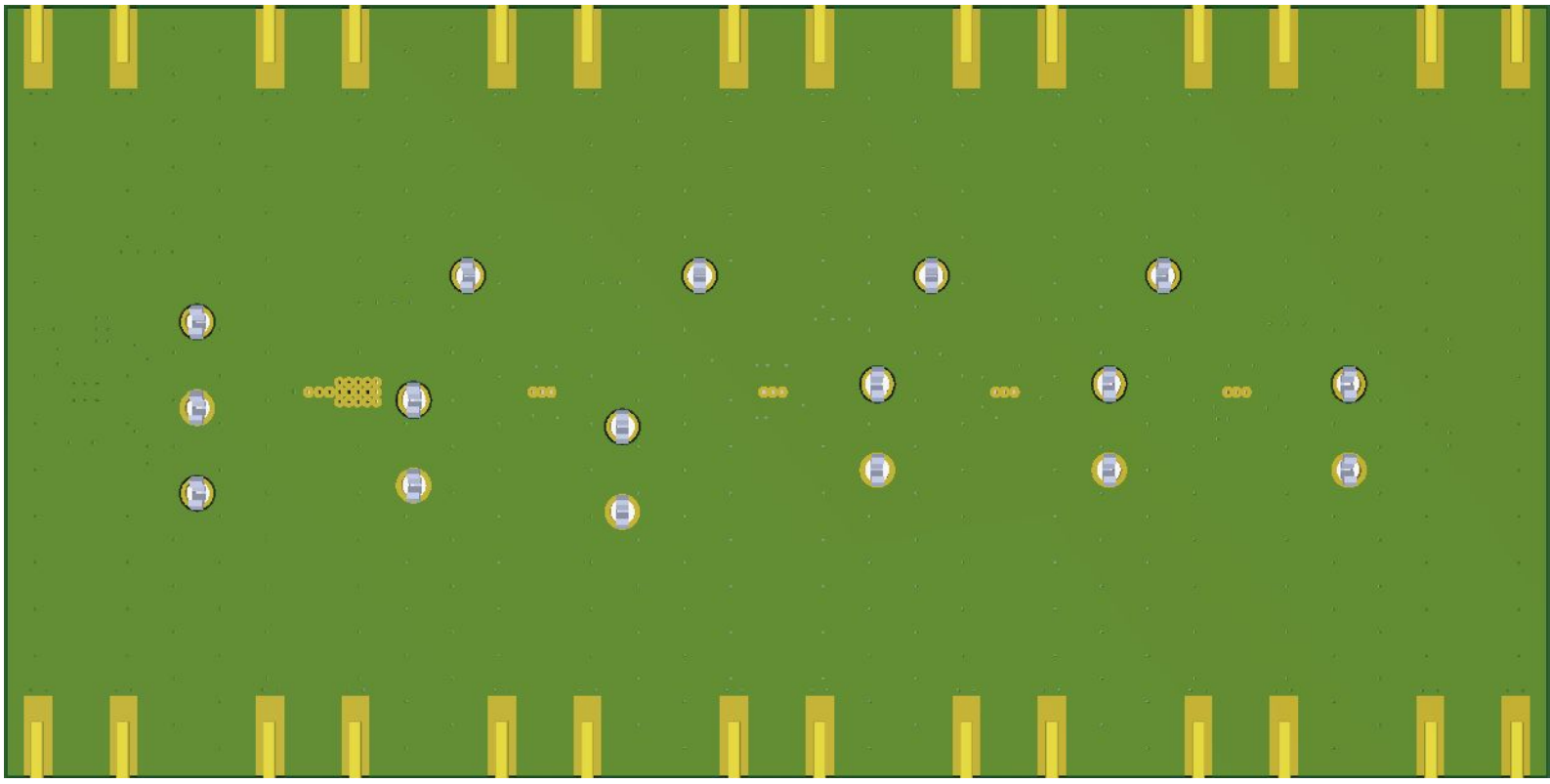

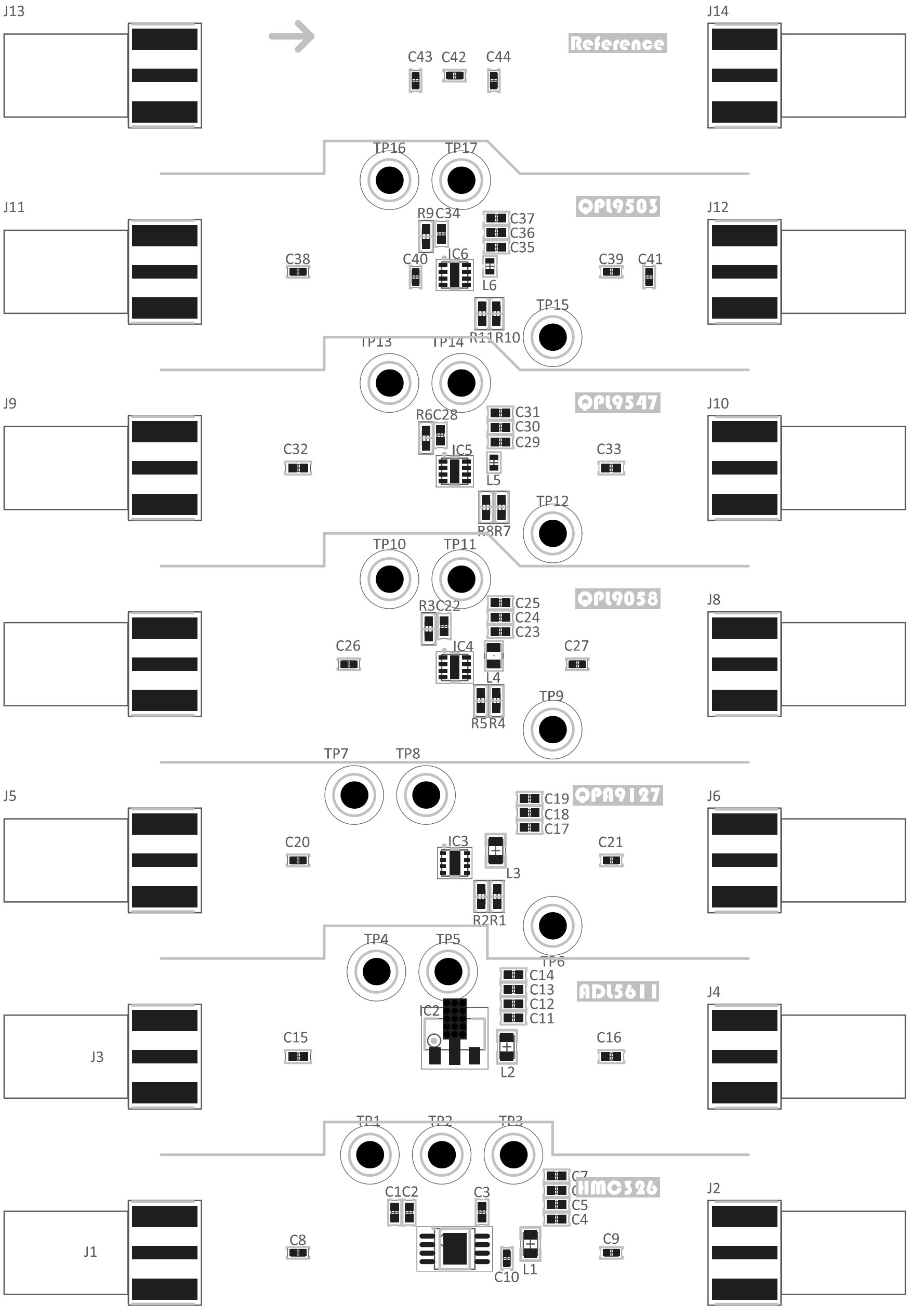
J13
J14
Reference
C43
C42
C44
TP16
TP17
J11
J12
QPL9503
R9
C34
C37
C36
C35
C38
C40
IC6
L6
C39
C41
TP15
R11
R10
TP13
TP14
J9
J10
QPL9547
R6
C28
C31
C30
C29
C32
IC5
L5
C33
TP12
R8
R7
TP10
TP11
J8
QPL9058
R3
C22
C25
C24
C23
C26
IC4
L4
C27
TP9
R5
R4
TP7
TP8
J5
J6
QPA9127
C19
C18
C17
C20
IC3
L3
C21
R2
R1
TP4
TP5
TP6
J4
ADL5611
C14
C13
C12
C11
IC2
J3
C15
L2
C16
TP1
TP2
TP3
J2
HMC326
C7
C5
C4
C1
C2
C3
J1
C8
C10
L1
C9