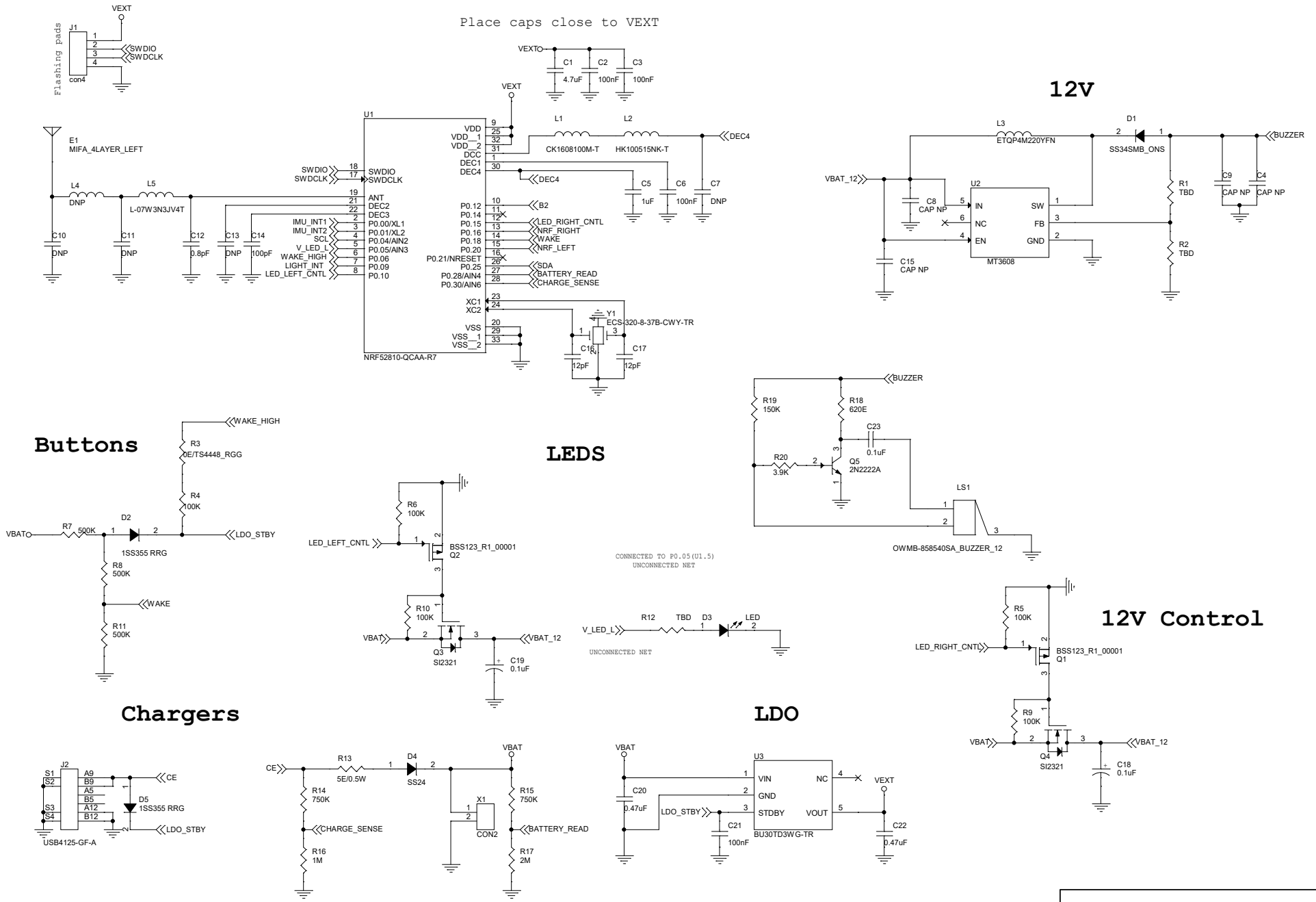

Title	<Title>	
Size A3	Document Number <Doc>	Rev <RevCode>
Date: Friday, March 22, 2024	Sheet 1 of 1	