CONTENT

1.Cover
2.content
3.Block Diagram
4.MCU
5.SG2042 DDR CH0-update
6.SG2042 DDR CH1-update
7.SG2042 DDR CH2-update
8.SG2042 DDR CH3-update
9.SG2042 DDR Power
10.SG2042 PCIE
11.SG2042 EMMC
12.SG2042 RGMII
13.SG2042 MISC
14.SG2042 VDDC
15.SG2042 VSS
16.SG2042 PCIE POWER
17.Pcie CLK Buffer
18.POWER_MISC
19.POWER_VDDC
20.POWER_VTT/VPP
21.POWER_VDDQ
22.PCIE_X1-EKEY
23.ASM2824_POWER/GND
24.ASM2824- POWER
25.ASM2824_PCIE
26.ASM2824_config
27.PCIE_X4 -MKEY2
28.PCIE_X4 -MKEY1
29.PCIE_X2 -ASM3142
30.PCIE_X2 JMB585
31.PCIE_X1_RTL8125B_1
32.PCIE_X1_RTL8125B_2
33.PCIE_X1-VL805
34.VL822 _10G-USBx4_B
35.VL822 _10G-USBx4_A
36.MACH

milkV			
Project:	Pionner		
File:	content		
Date:	Friday, January 19, 2024	Rev:	1.2
Designed by:	<designer>	Sheet:	2 of 36

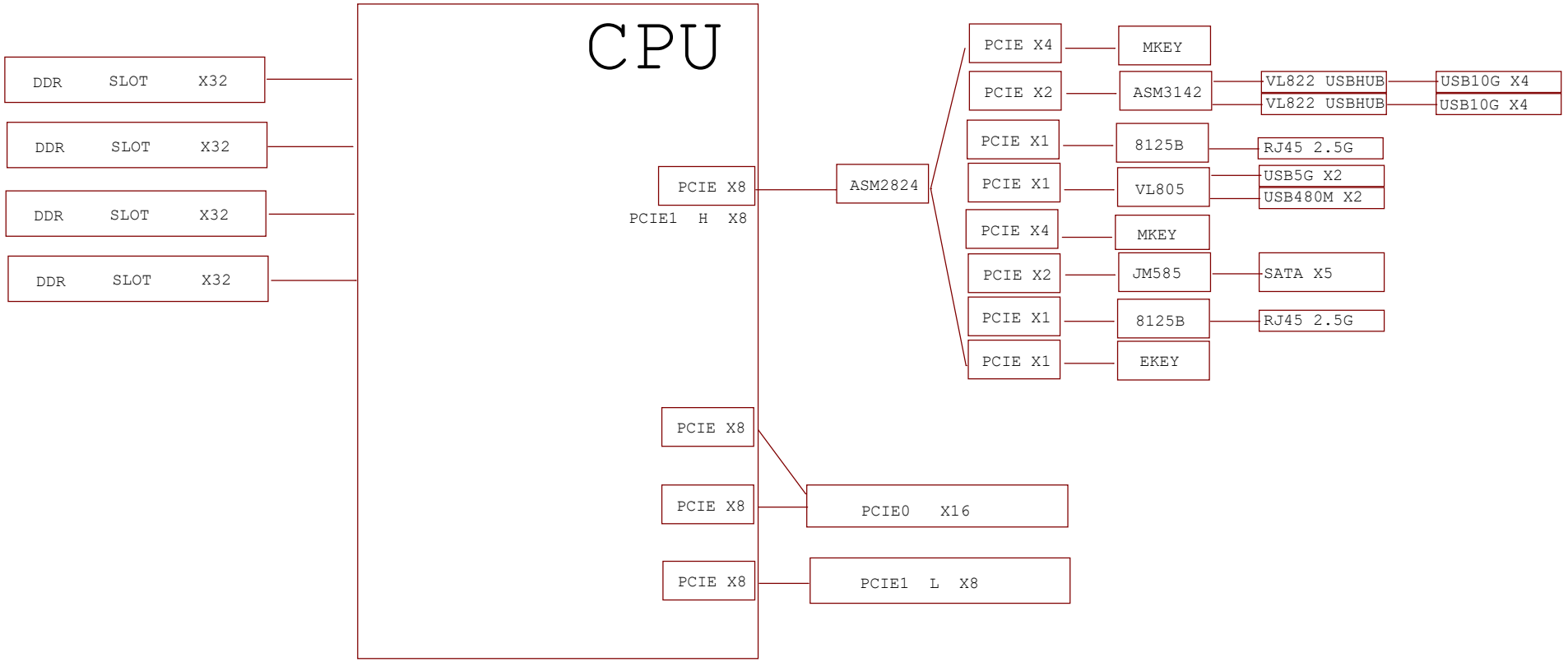

Project:	Pionner
File:	Block Diagram
Date:	Friday, January 19, 2024
Rev:	1.2
Designed by:	<designer>
Sheet:	3 of 36

MCU

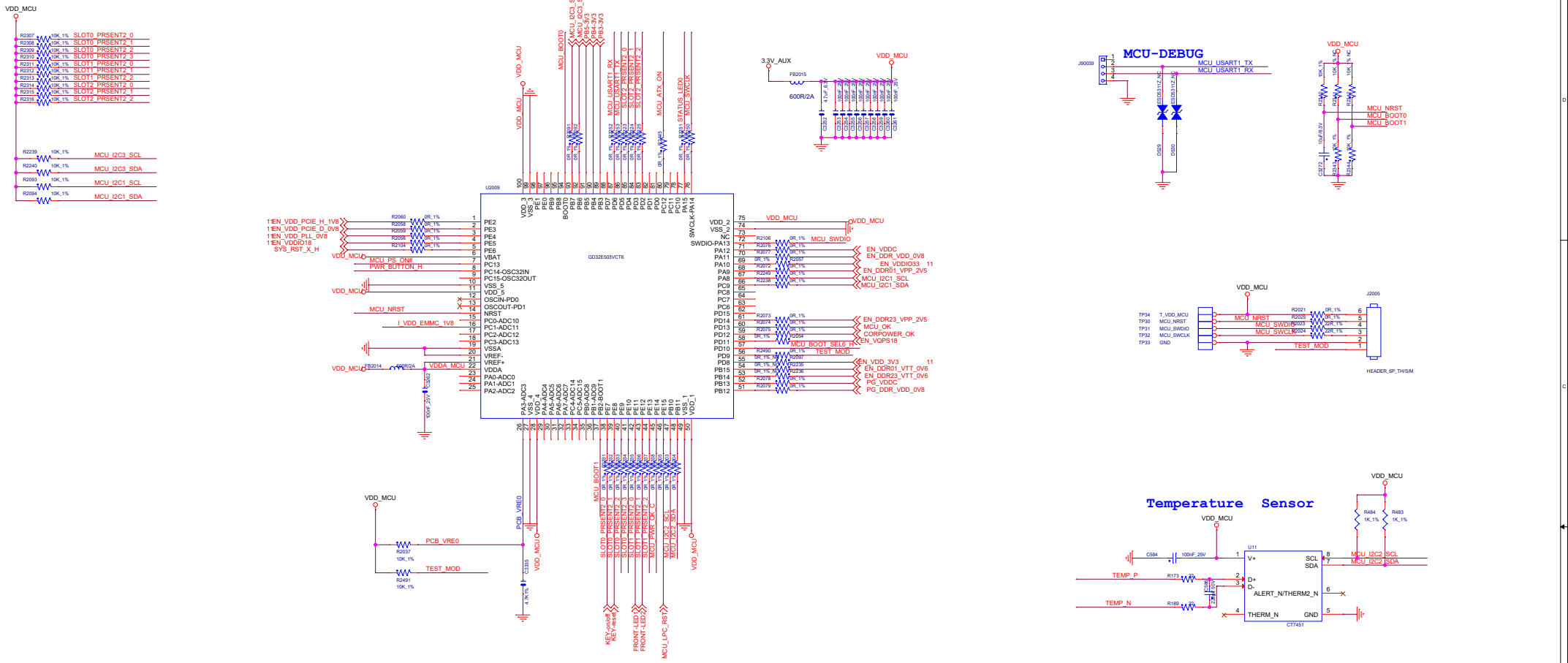

MCU-DEBUG

Temperature Sensor

FRONT PANEL KEY and LED

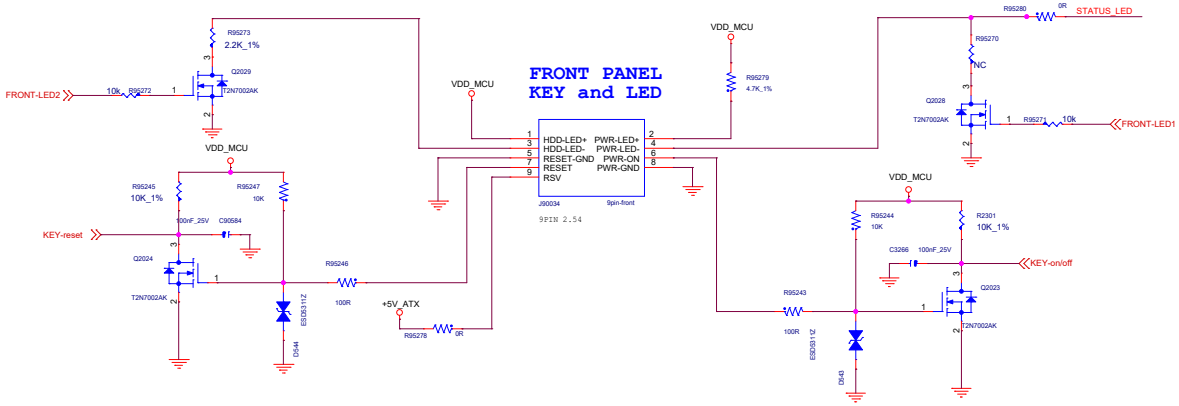

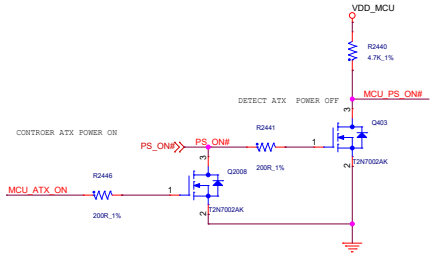

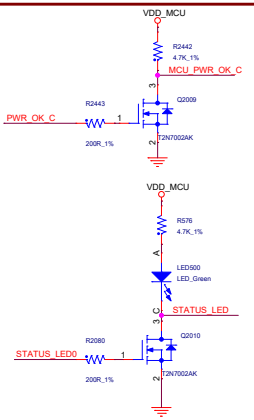

Project:	Pionner
File:	MCU
Date:	Friday, January 19, 2024
Rev:	1.2
Designed by:	<designer>
Sheet	4 of 36

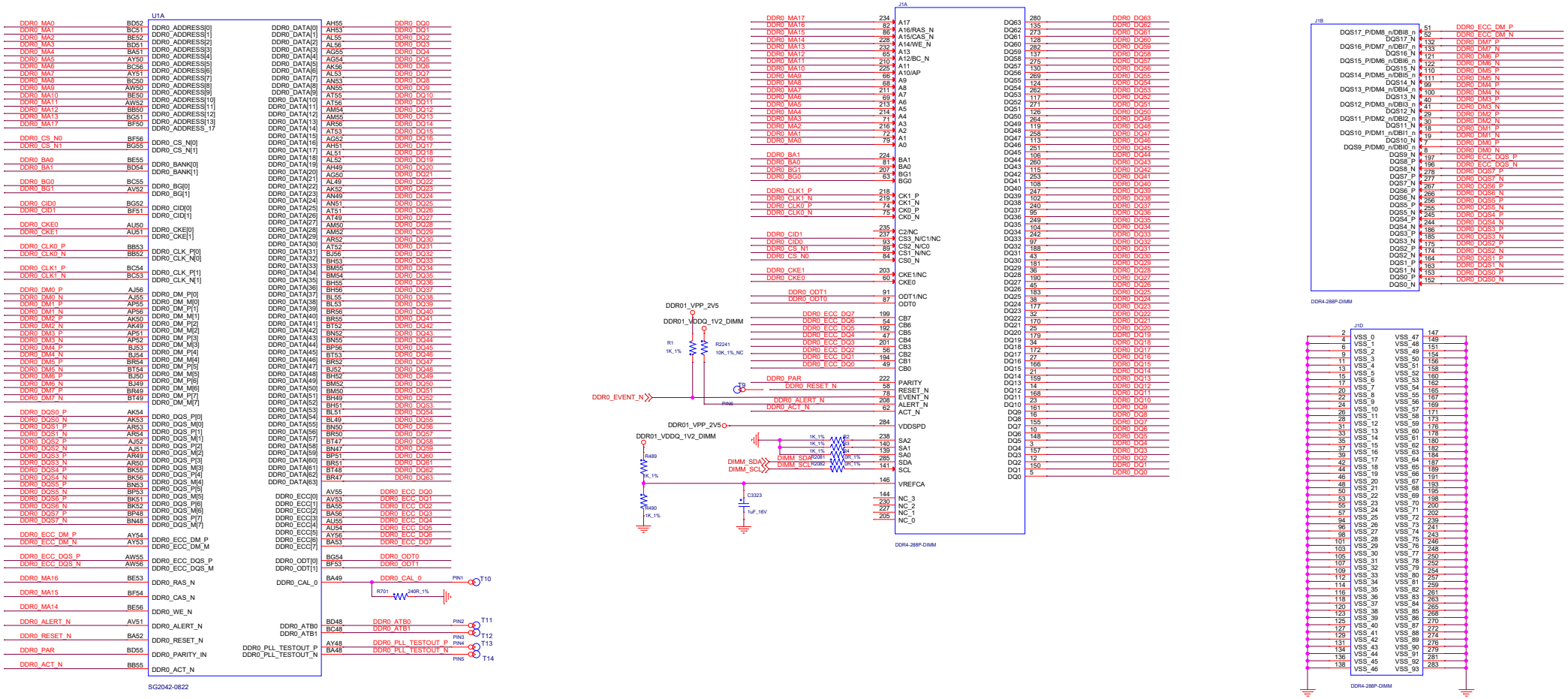

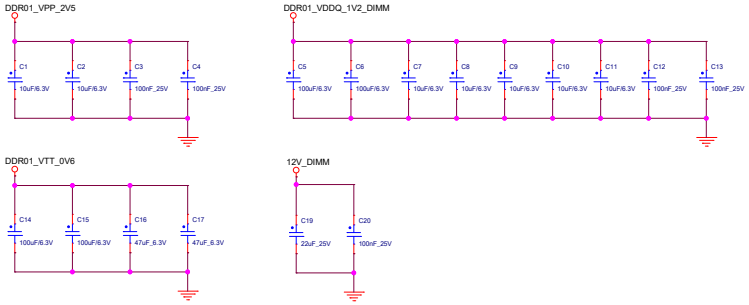

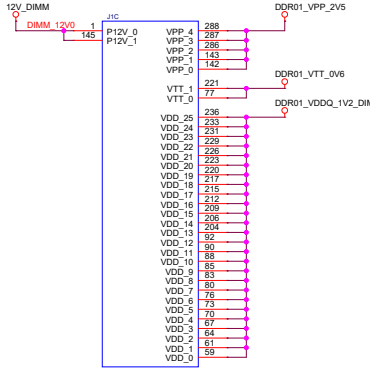

Project:	Pionner
File:	SG2042 DDR CH0-update
Date:	Friday, January 19, 2024
Rev:	1.2
Designed by	<designer>
Sheet:	5 of 36

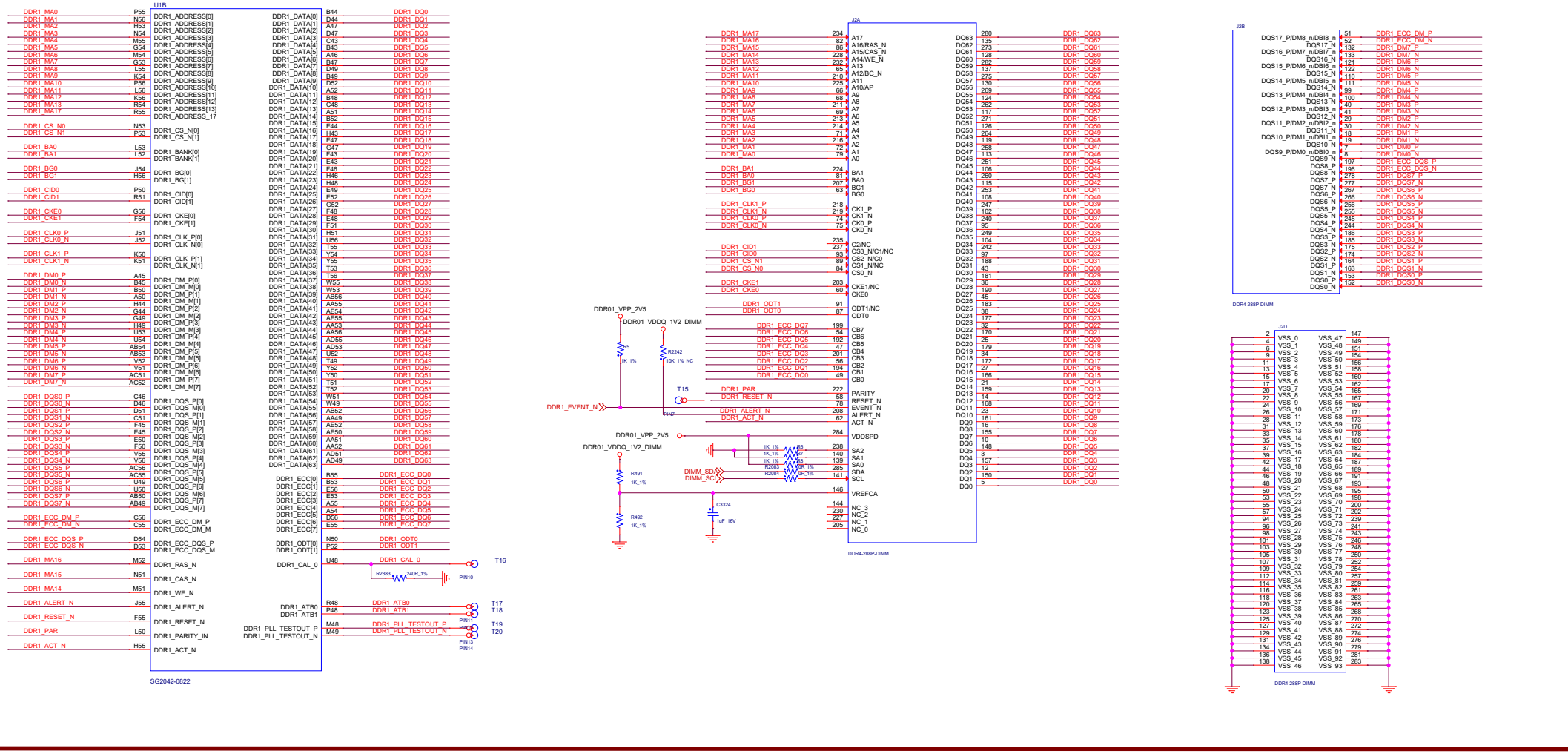

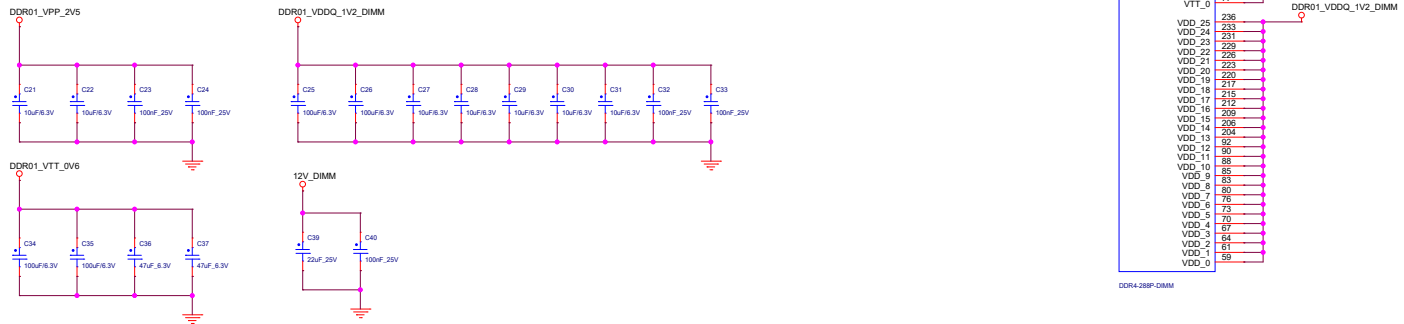

Project:	Pionner
File:	SG2042 DDR CH1-update
Date:	Friday, January 19, 2024
Rev:	1.2
Designed by:	<designer>
Sheet:	6 of 36

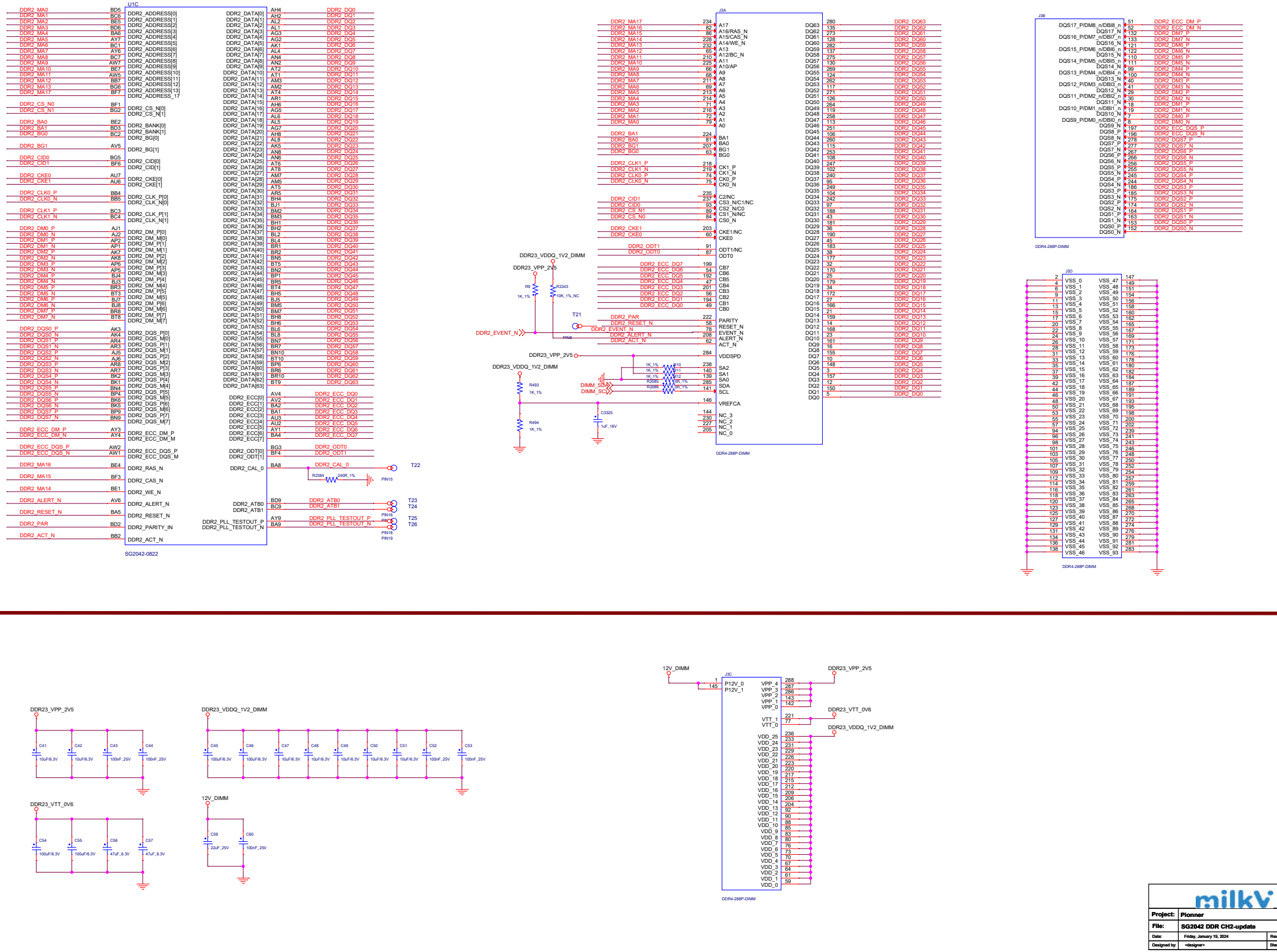
U1C
SG2042-0822
J3A
DDR4-288P-DIMM
J3B
DDR4-288P-DIMM
J3D
DDR4-288P-DIMM
DDR23_VDDQ_1V2_DIMM
DDR23_VPP_2V5
DDR2_EVENT_N
T21
T22
T23
T24
T25
T26
J3C
DDR4-288P-DIMM
12V_DIMM
DDR23_VPP_2V5
DDR23_VTT_0V6
DDR23_VDDQ_1V2_DIMM
milkV
Project: Pionner
File: SG2042 DDR CH2-update
Date: Friday, January 19, 2024
Rev: 1.2
Designed by: <designer>
Sheet: 7 of 36

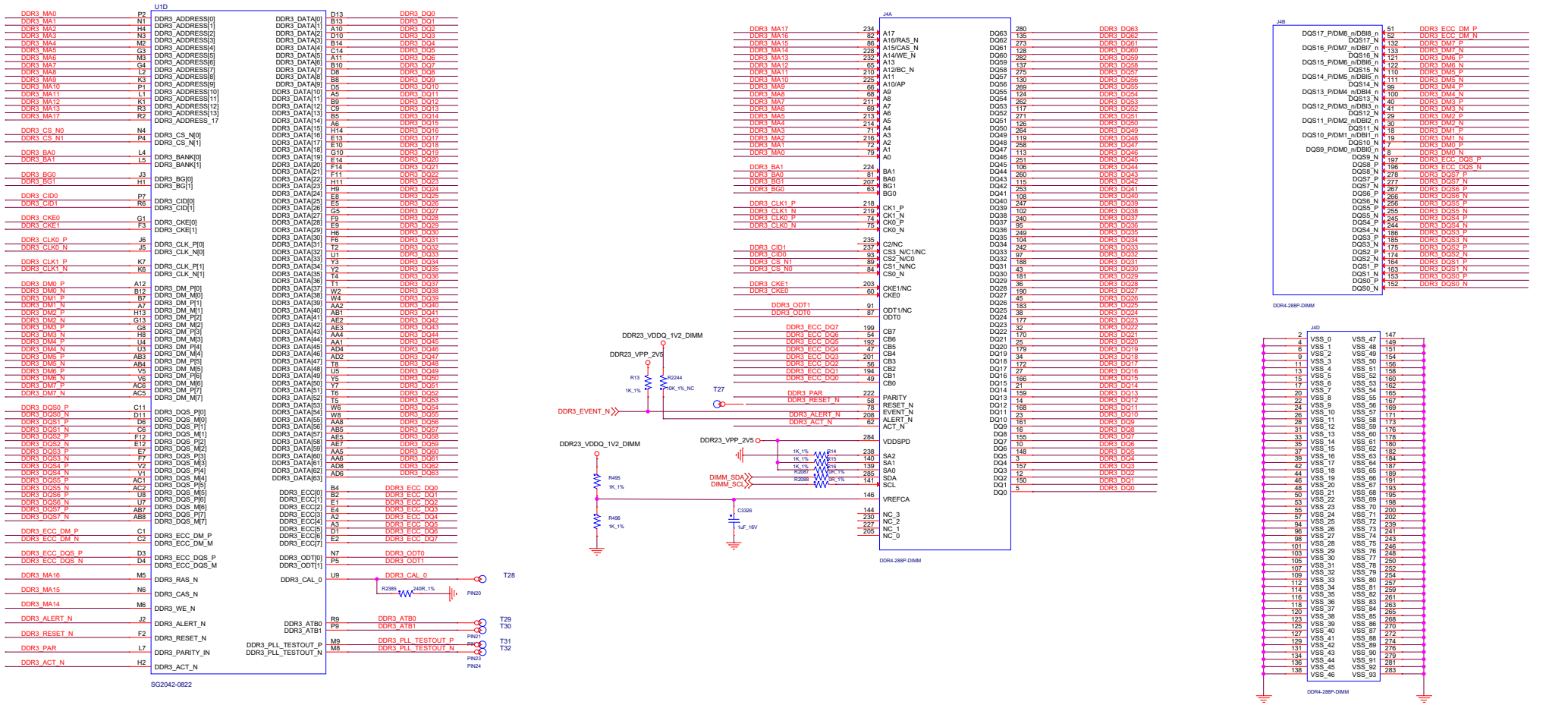

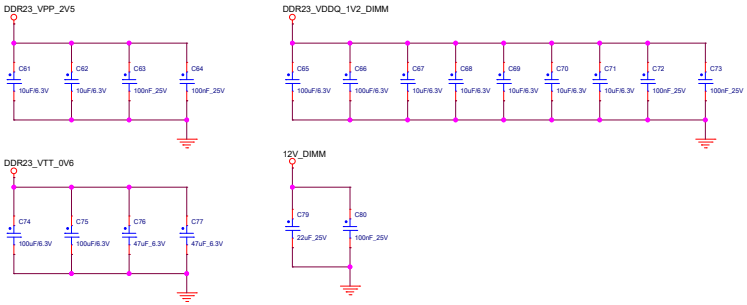

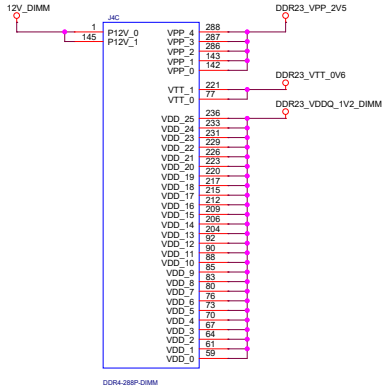

Project:	Pioneer
File:	SG2042 DDR CH3-update
Date:	Friday, January 19, 2024
Rev:	1.2
Designed by:	<designer>
Sheet:	8 of 36

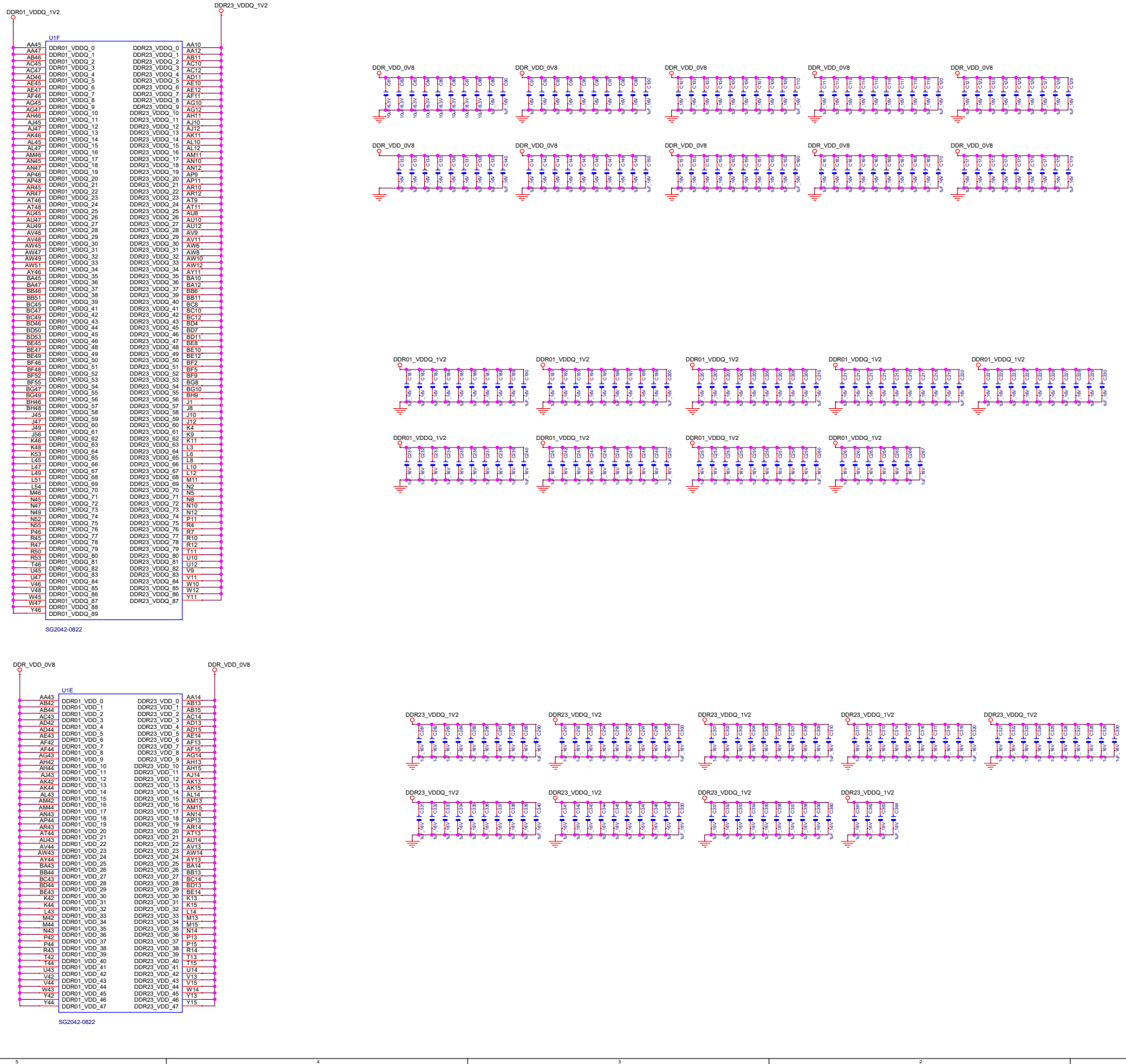
DDR01_VDDQ_1V2
DDR23_VDDQ_1V2
U1F
SG2042-0822
DDR_VDD_0V8
U1E
SG2042-0822
milkV
Project: Pionner
File: SG2042 DDR Power
Date: Friday, January 19, 2024
Rev: 1.2
Designed by: <designer>
Sheet: 9 of 36

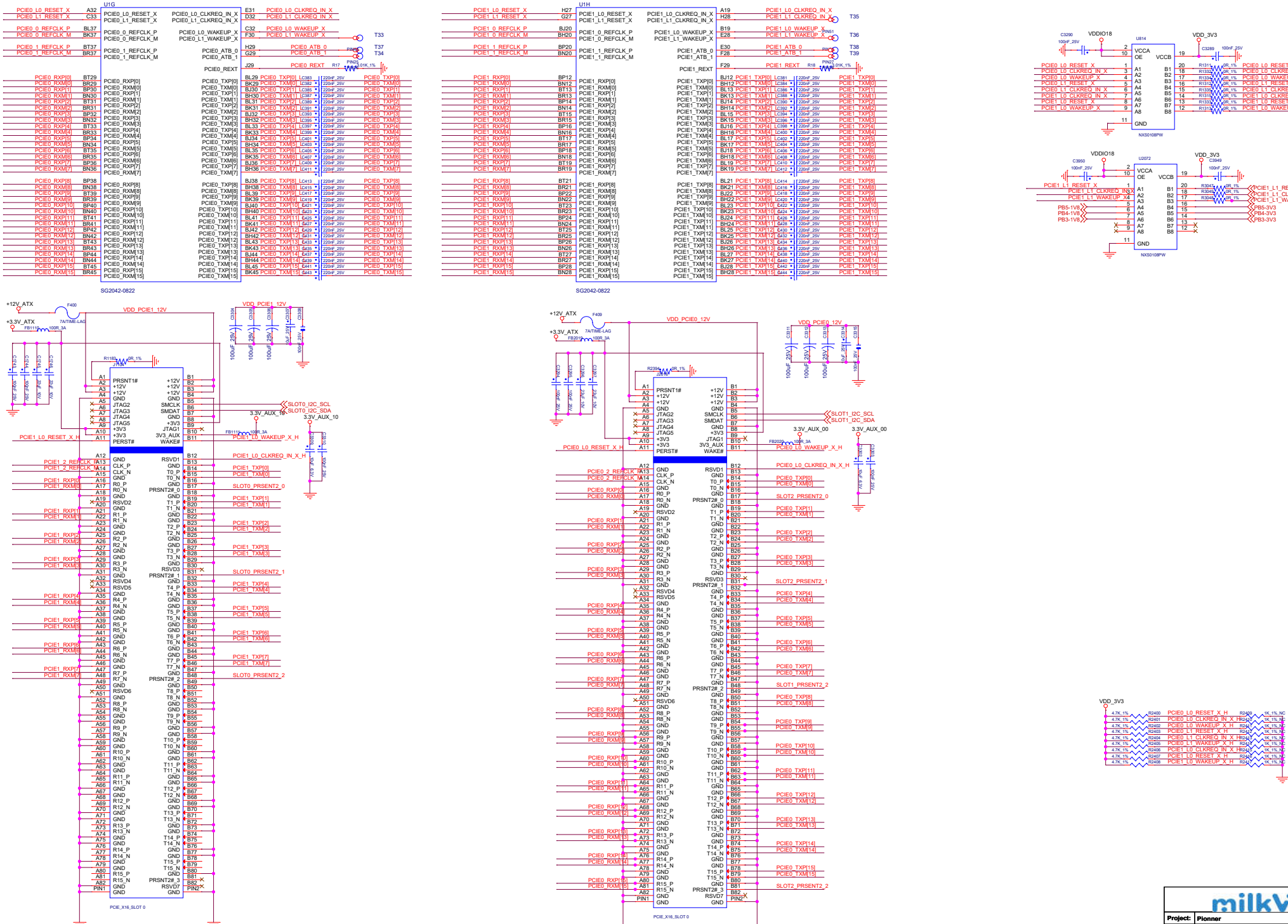
U1G
U1H
SG2042-0822
SG2042-0822
U814
NXS0108PW
U2072
NXS0108PW
VDDIO18
VDD_3V3
VDD_PCIE1_12V
VDD_PCIE0_12V
3.3V_AUX_10
3.3V_AUX_00
PCIE_X16_SLOT 0
PCIE_X16_SLOT 0
milkV
Project: Pionner
File: SG2042 PCIE
Date: Friday, January 19, 2024
Rev: 1.2
Designed by: <designer>
Sheet: 10 of 36

CLK SEL

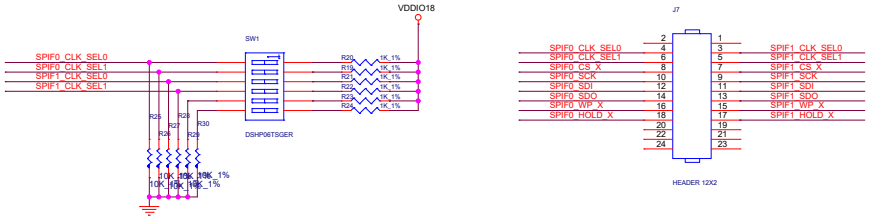

SPI FLASH

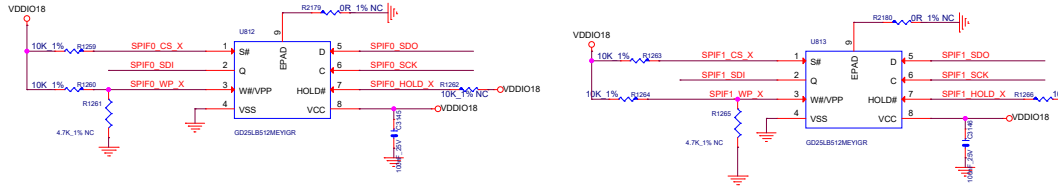

EMMC SOCKET

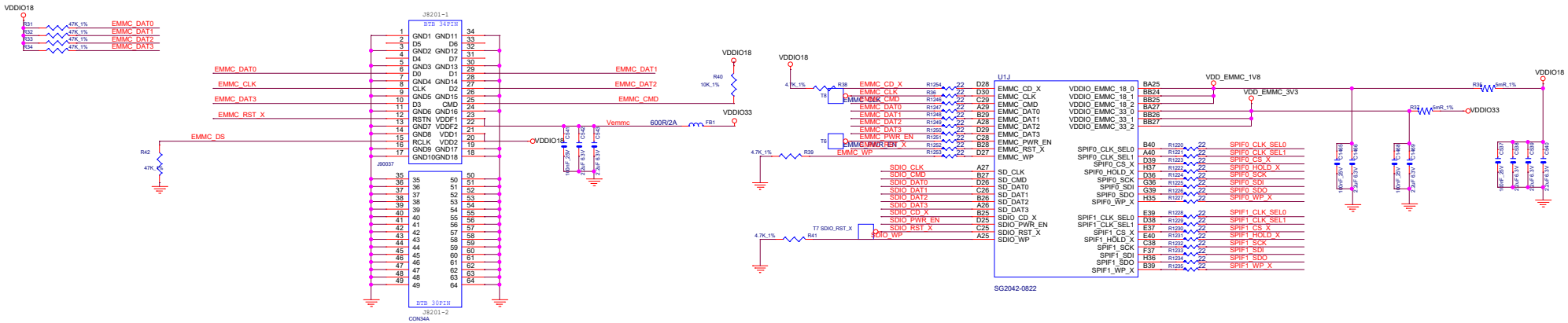

SD CARD

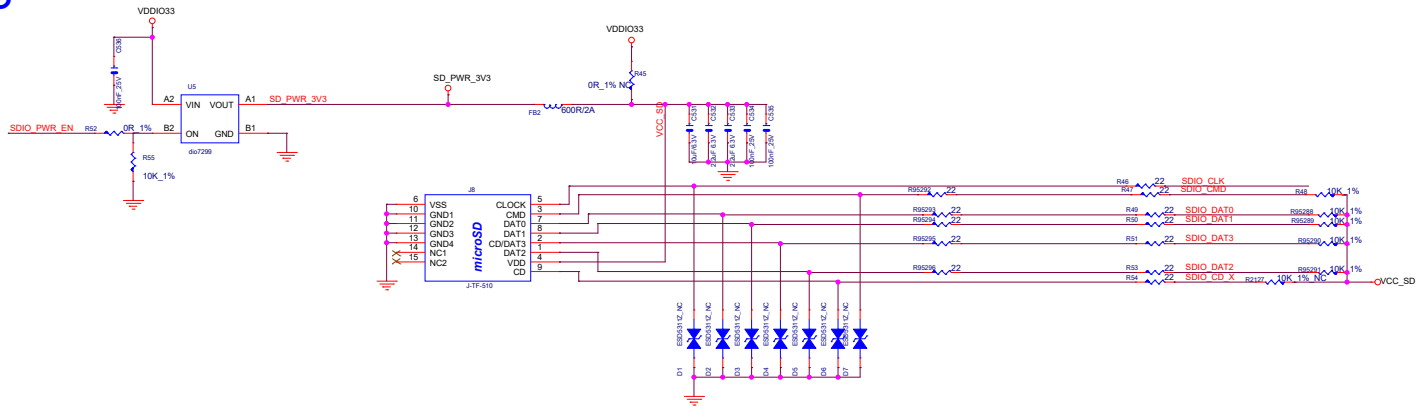

Project:	Pioneer
File:	SG2042 EMMC
Date:	Friday, January 19, 2024
Rev:	1.2
Designed by:	<designer>
Sheet:	11 of 36

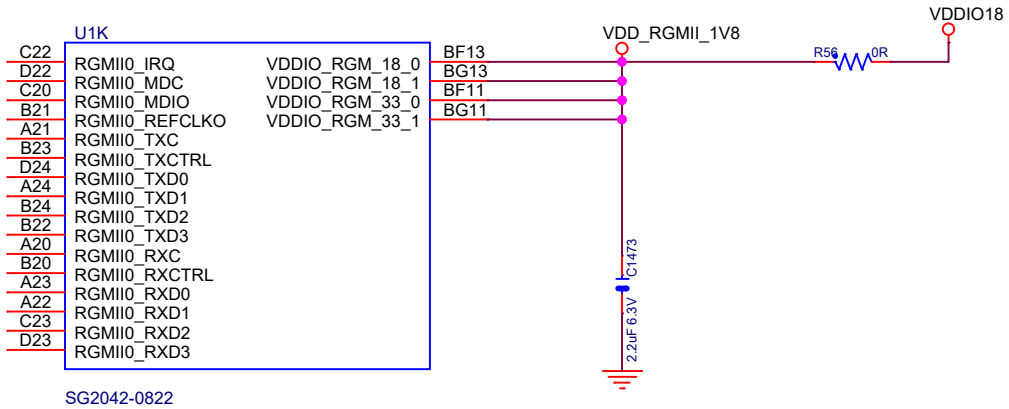

Project:	Pionner		
File:	SG2042 RGMII		
Date:	Friday, January 19, 2024	Rev:	1.2
Designed by:	<designer>	Sheet:	12 of 36

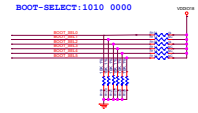
BOOT-SELECT:1010 0000

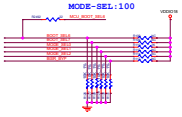
MODE-SEL:100

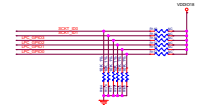

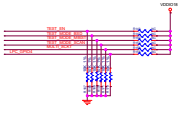

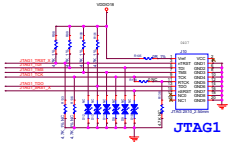
JTAG1

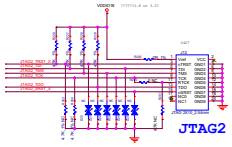
JTAG2

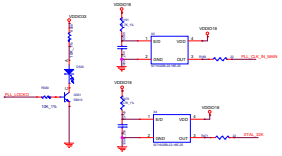

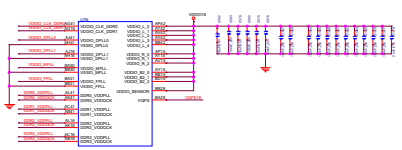

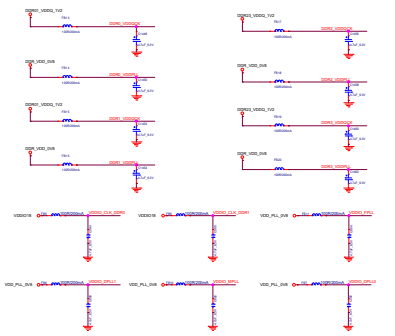

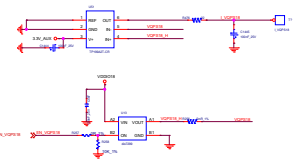

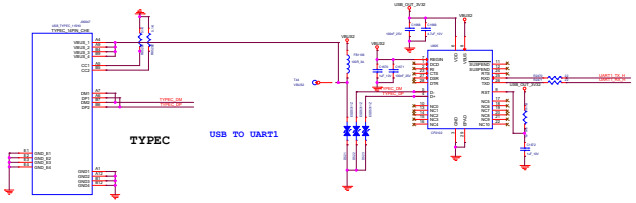
TYPEC
USB TO UART1

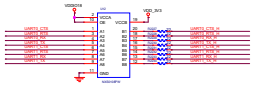

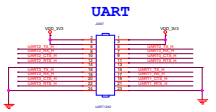
UART

PCIE-I2C

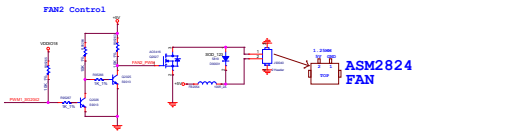
FAN2 Control
ASM2824
FAN
UART0-3V3

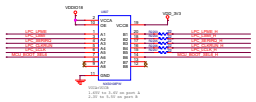

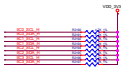

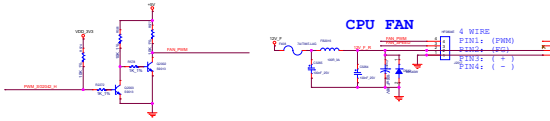
FAN Control
CPU FAN
4 WIRE
PIN1: (PWM)
PIN2: (FG)
PIN3: (+)
PIN4: (-)

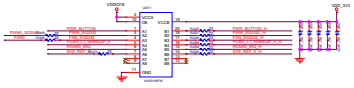

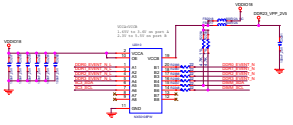

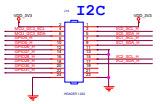
I2C

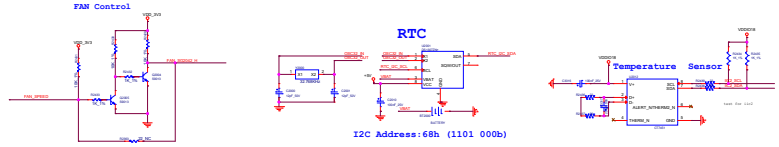
FAN Control
RTC
I2C Address:68h (1101 000b)
Temperature Sensor

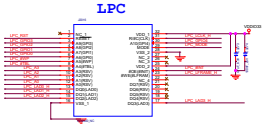
LPC

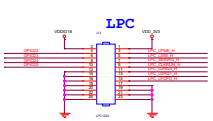
LPC

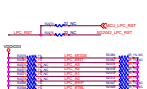

milkV
Project: Pioneer
File: Added MISC
Title: Ring_Array_V.SCH
Size: A3
Rev: 1.2
Sheet: 3 of 10

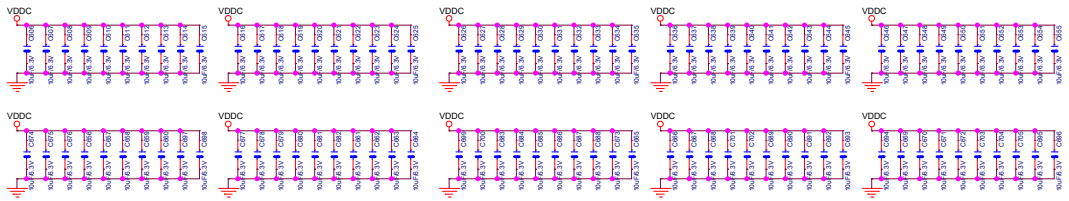
VDDC
C505
C506
C507
C508
C509
C510
C511
C512
C513
C514
C515
C516
C517
C518
C519
C520
C521
C522
C523
C524
C525
C526
C527
C528
C529
C530
C531
C532
C533
C534
C535
C536
C537
C538
C539
C540
C541
C542
C543
C544
C545
C546
C547
C548
C549
C550
C551
C552
C553
C554
C555
C556
C557
C558
C559
C560
C561
C562
C563
C564
C565
C566
C567
C568
C569
C570
C571
C572
C573
C574
C575
C576
C577
C578
C579
C580
C581
C582
C583
C584
C585
C586
C587
C588
C589
C590
C591
C592
C593
C594
C595
10uF/6.3V

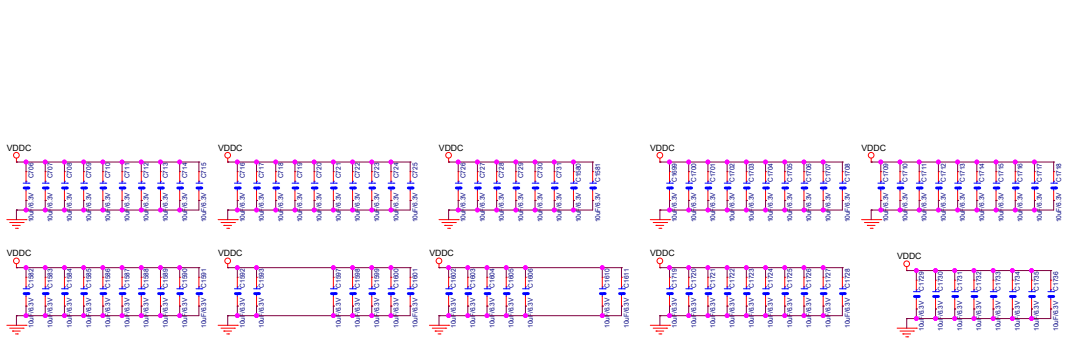
VDDC
C596
C597
C598
C599
C600
C601
C602
C603
C604
C605
C606
C607
C608
C609
C610
C611
C612
C613
C614
C615
C616
C617
C618
C619
C620
C621
C622
C623
C624
C625
C626
C627
C628
C629
C630
C631
C632
C633
C634
C635
C636
C637
C638
C639
C640
C641
C642
C643
C644
C645
C646
C647
C648
C649
C650
C651
C652
C653
C654
C655
C656
C657
C658
C659
C660
C661
C662
C663
C664
C665
C666
C667
C668
C669
C670
C671
C672
C673
C674
C675
C676
C677
C678
C679
C680
C681
C682
C683
C684
C685
C686
C687
C688
C689
C690
C691
C692
C693
C694
C695
10uF/6.3V

VDDC
C696
C697
C698
C699
C700
C701
C702
C703
C704
C705
C706
C707
C708
C709
C710
C711
C712
C713
C714
C715
C716
C717
C718
C719
C720
C721
C722
C723
C724
C725
C726
C727
C728
C729
C730
C731
C732
C733
C734
C735
C736
C737
C738
C739
C740
C741
C742
C743
C744
C745
C746
C747
C748
C749
C750
C751
C752
C753
C754
C755
C756
C757
C758
C759
C760
C761
C762
C763
C764
C765
C766
C767
C768
C769
C770
C771
C772
C773
C774
C775
C776
C777
C778
C779
C780
C781
C782
C783
C784
C785
C786
C787
C788
C789
C790
C791
C792
C793
C794
C795
10uF/6.3V

VDDC
C796
C797
C798
C799
C800
C801
C802
C803
C804
C805
C806
C807
C808
C809
C810
C811
C812
C813
C814
C815
C816
C817
C818
C819
C820
C821
C822
C823
C824
C825
C826
C827
C828
C829
C830
C831
C832
C833
C834
C835
C836
C837
C838
C839
C840
C841
C842
C843
C844
C845
C846
C847
C848
C849
C850
C851
C852
C853
C854
C855
C856
C857
C858
C859
C860
C861
C862
C863
C864
C865
C866
C867
C868
C869
C870
C871
C872
C873
C874
C875
C876
C877
C878
C879
C880
C881
C882
C883
C884
C885
C886
C887
C888
C889
C890
C891
C892
C893
C894
C895
10uF/6.3V

VDDC
C896
C897
C898
C899
C900
C901
C902
C903
C904
C905
C906
C907
C908
C909
C910
C911
C912
C913
C914
C915
C916
C917
C918
C919
C920
C921
C922
C923
C924
C925
C926
C927
C928
C929
C930
C931
C932
C933
C934
C935
C936
C937
C938
C939
C940
C941
C942
C943
C944
C945
C946
C947
C948
C949
C950
C951
C952
C953
C954
C955
C956
C957
C958
C959
C960
C961
C962
C963
C964
C965
C966
C967
C968
C969
C970
C971
C972
C973
C974
C975
C976
C977
C978
C979
C980
C981
C982
C983
C984
C985
C986
C987
C988
C989
C990
C991
C992
C993
C994
C995
10uF/6.3V

VDDC
C996
C997
C998
C999
C1000
C1001
C1002
C1003
C1004
C1005
C1006
C1007
C1008
C1009
C1010
C1011
C1012
C1013
C1014
C1015
C1016
C1017
C1018
C1019
C1020
C1021
C1022
C1023
C1024
C1025
C1026
C1027
C1028
C1029
C1030
C1031
C1032
C1033
C1034
C1035
C1036
C1037
C1038
C1039
C1040
C1041
C1042
C1043
C1044
C1045
C1046
C1047
C1048
C1049
C1050
C1051
C1052
C1053
C1054
C1055
C1056
C1057
C1058
C1059
C1060
C1061
C1062
C1063
C1064
C1065
C1066
C1067
C1068
C1069
C1070
C1071
C1072
C1073
C1074
C1075
C1076
C1077
C1078
C1079
C1080
C1081
C1082
C1083
C1084
C1085
C1086
C1087
C1088
C1089
C1090
C1091
C1092
C1093
C1094
C1095
10uF/6.3V

VDDC
C1096
C1097
C1098
C1099
C1100
C1101
C1102
C1103
C1104
C1105
C1106
C1107
C1108
C1109
C1110
C1111
C1112
C1113
C1114
C1115
C1116
C1117
C1118
C1119
C1120
C1121
C1122
C1123
C1124
C1125
C1126
C1127
C1128
C1129
C1130
C1131
C1132
C1133
C1134
C1135

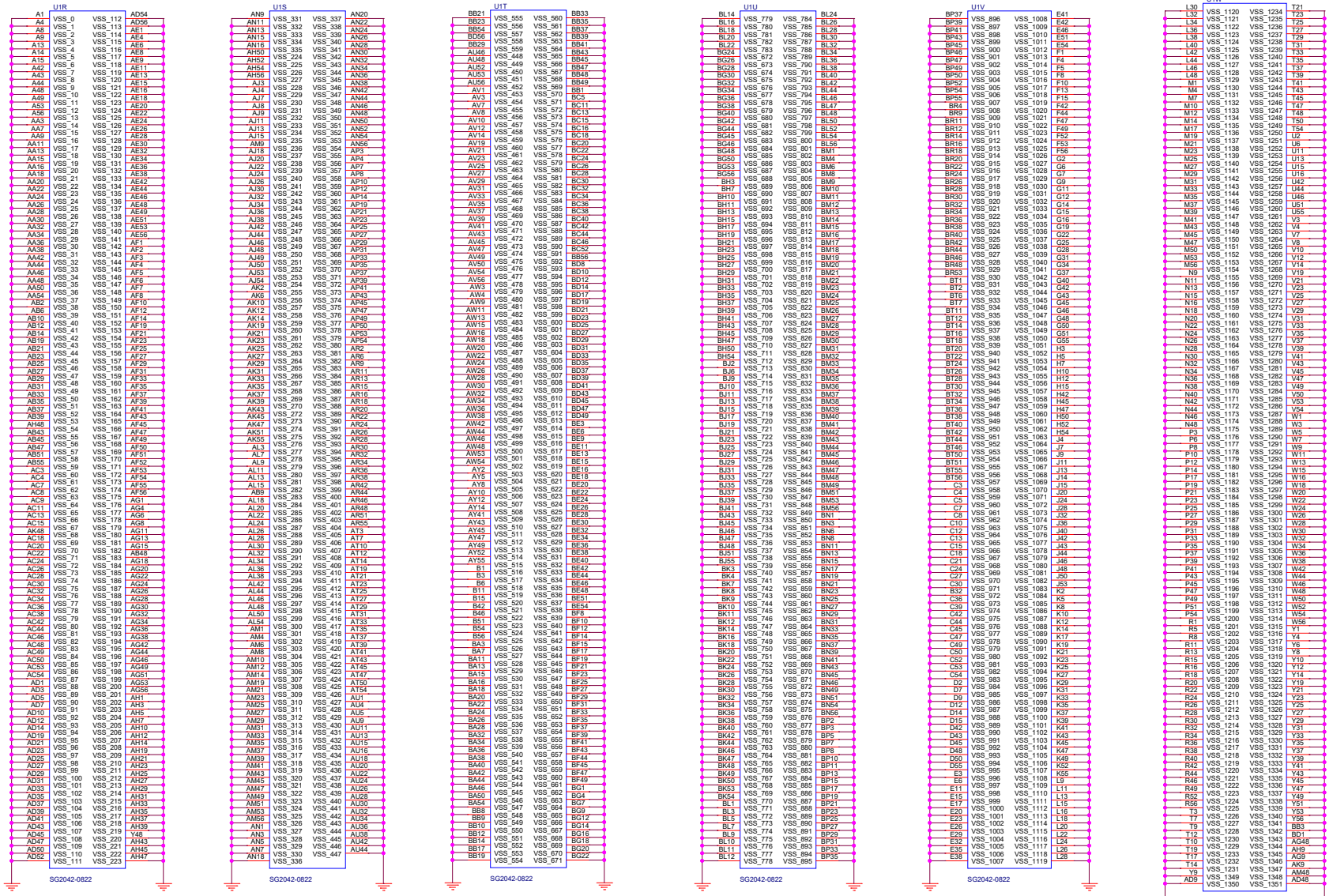

Project:	Pionner
File:	SG2042 VSS
Date:	Friday, January 19, 2024
Rev:	1.2
Designed by:	<designer>
Sheet:	15 of 36

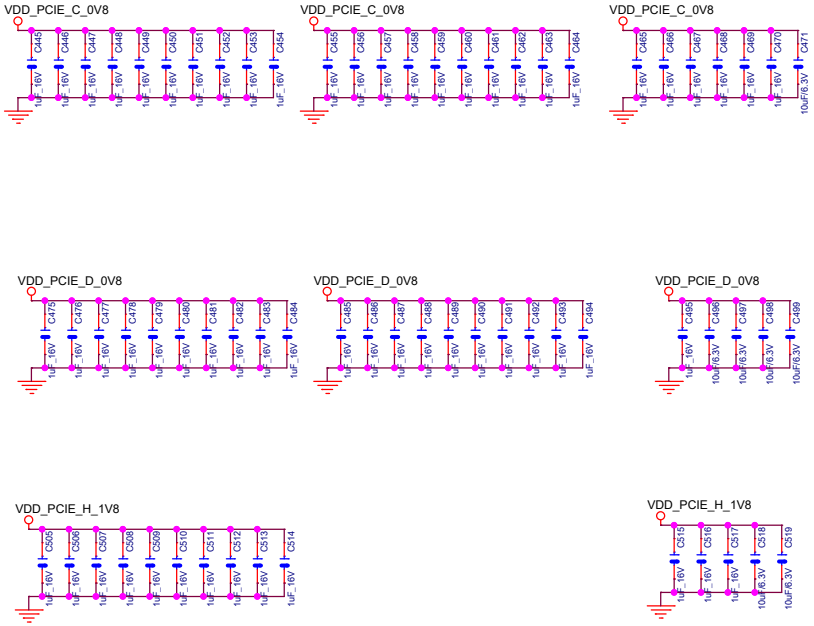

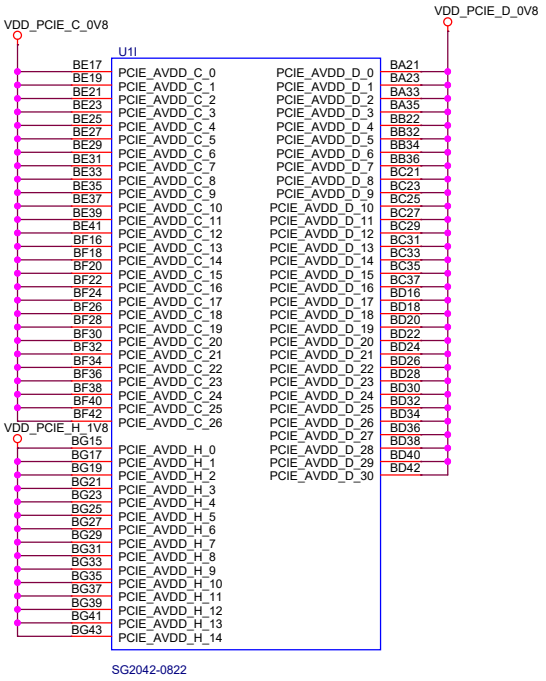

Project:	Pionner		
File:	SG2042 PCIE POWER		
Date:	Friday, January 19, 2024	Rev:	1.2
Designed by:	<designer>	Sheet:	16 of 36

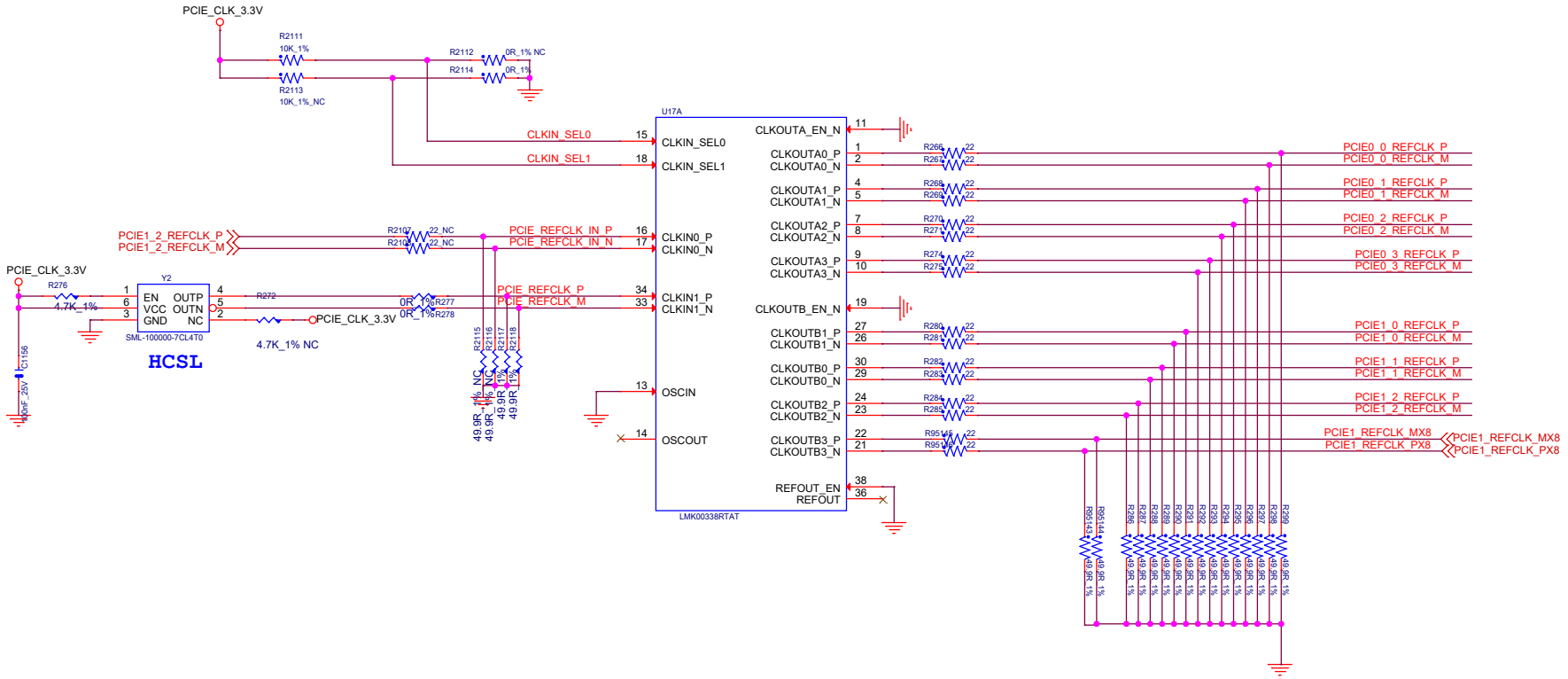

Project:	Pionner
File:	Pcie CLK Buffer
Date:	Friday, January 19, 2024
Rev:	1.2
Designed by:	<designer>
Sheet:	17 of 36

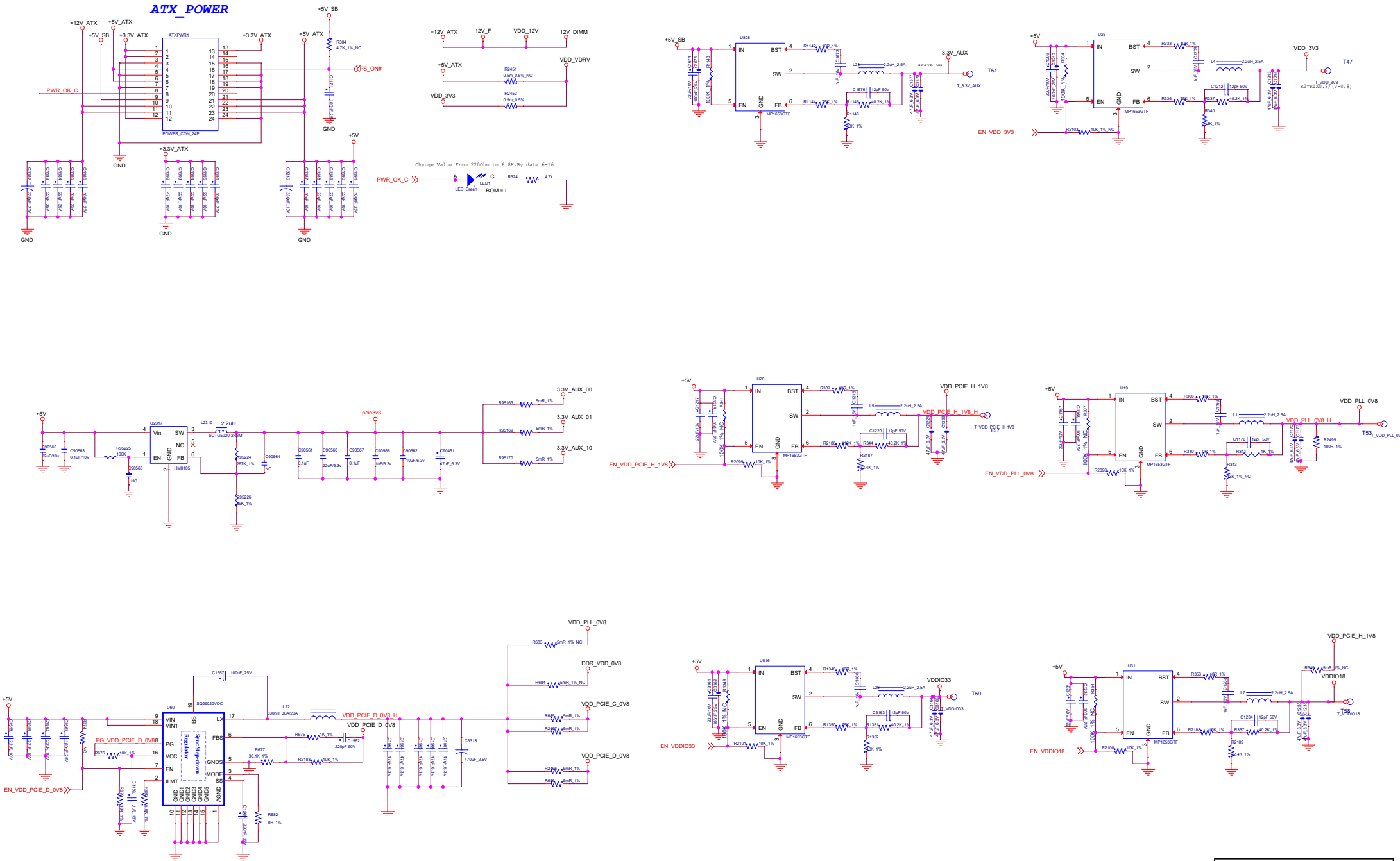

Project:	Pionner
File:	POWER_MISC
Date:	Friday, January 19, 2024
Rev:	1.2
Designed by:	<designer>
Sheet:	18 of 36

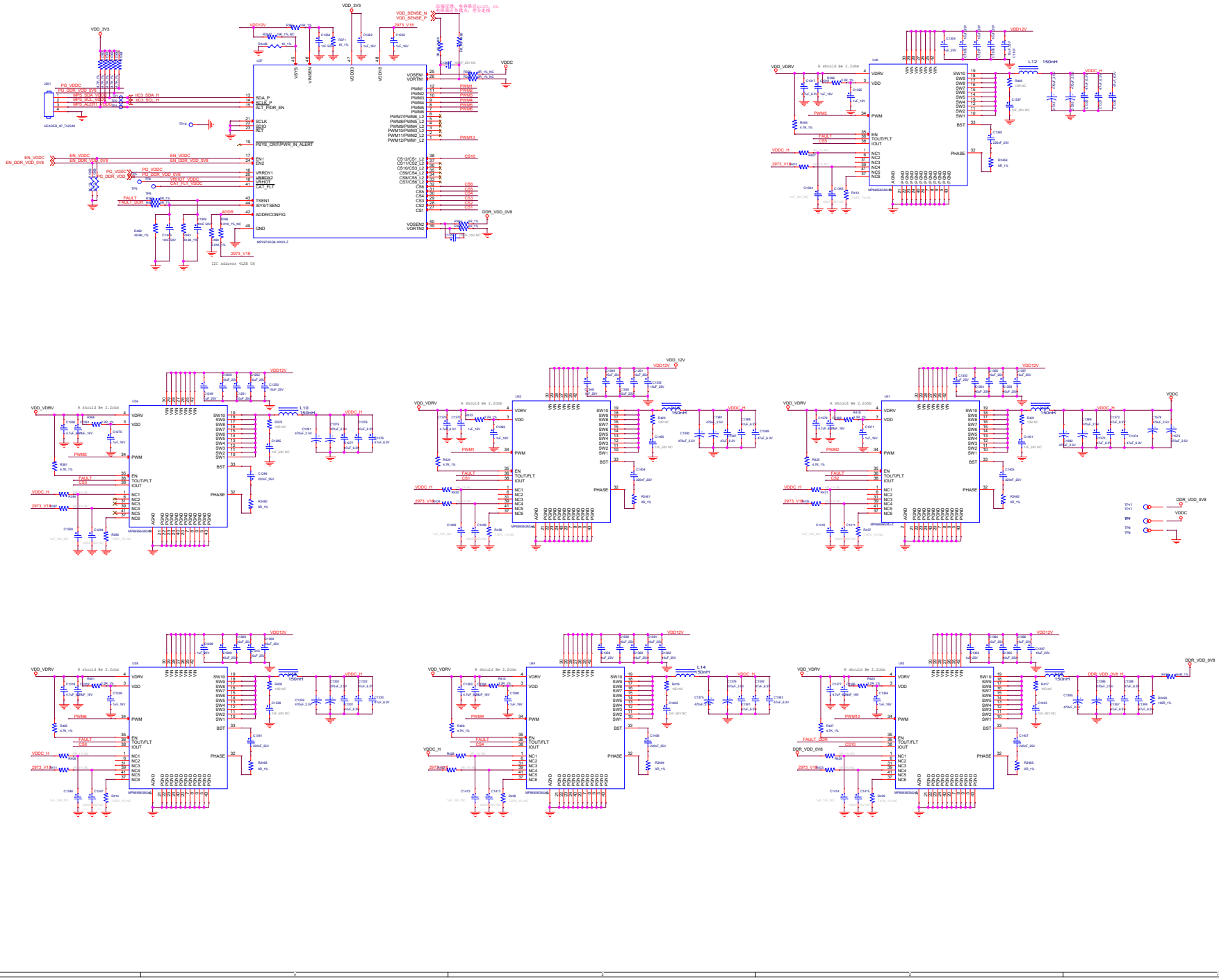

Project:	Pioneer		
File:	POWER_VDDC		
Date:	Friday, January 19, 2024	Rev:	1.0
Designed by:	<designer>	Sheet	19 of 36

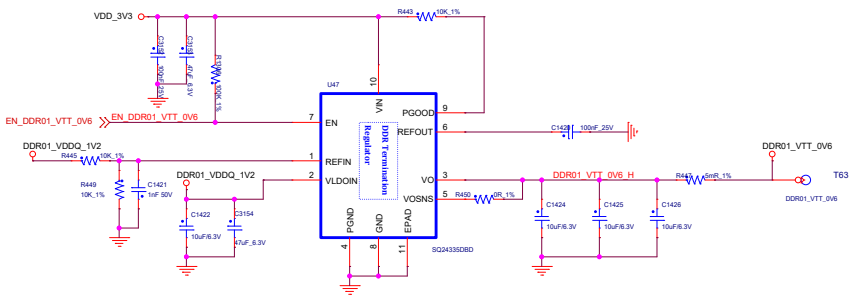

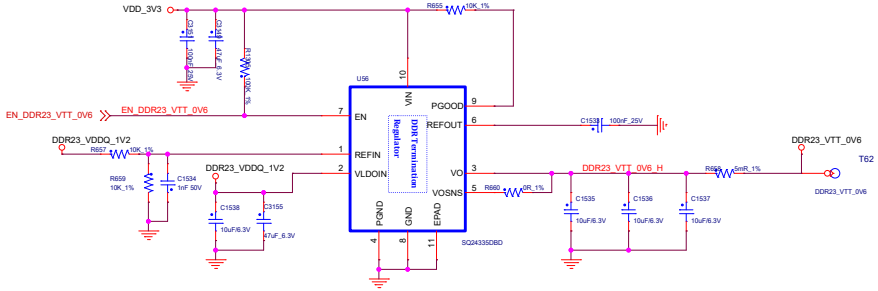

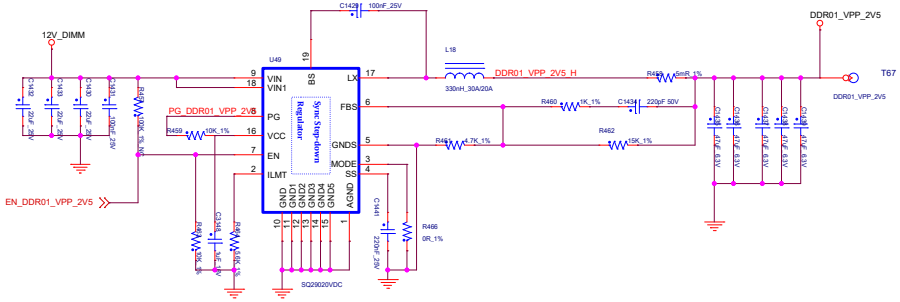

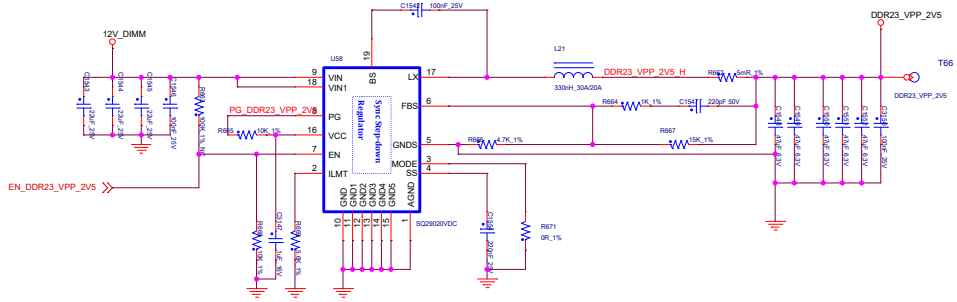

Project:	Pioneer
File:	POWER_VTT/VPP
Date:	Friday, January 19, 2024
Rev:	1.2
Designed by:	<designer>
Sheet:	20 of 36

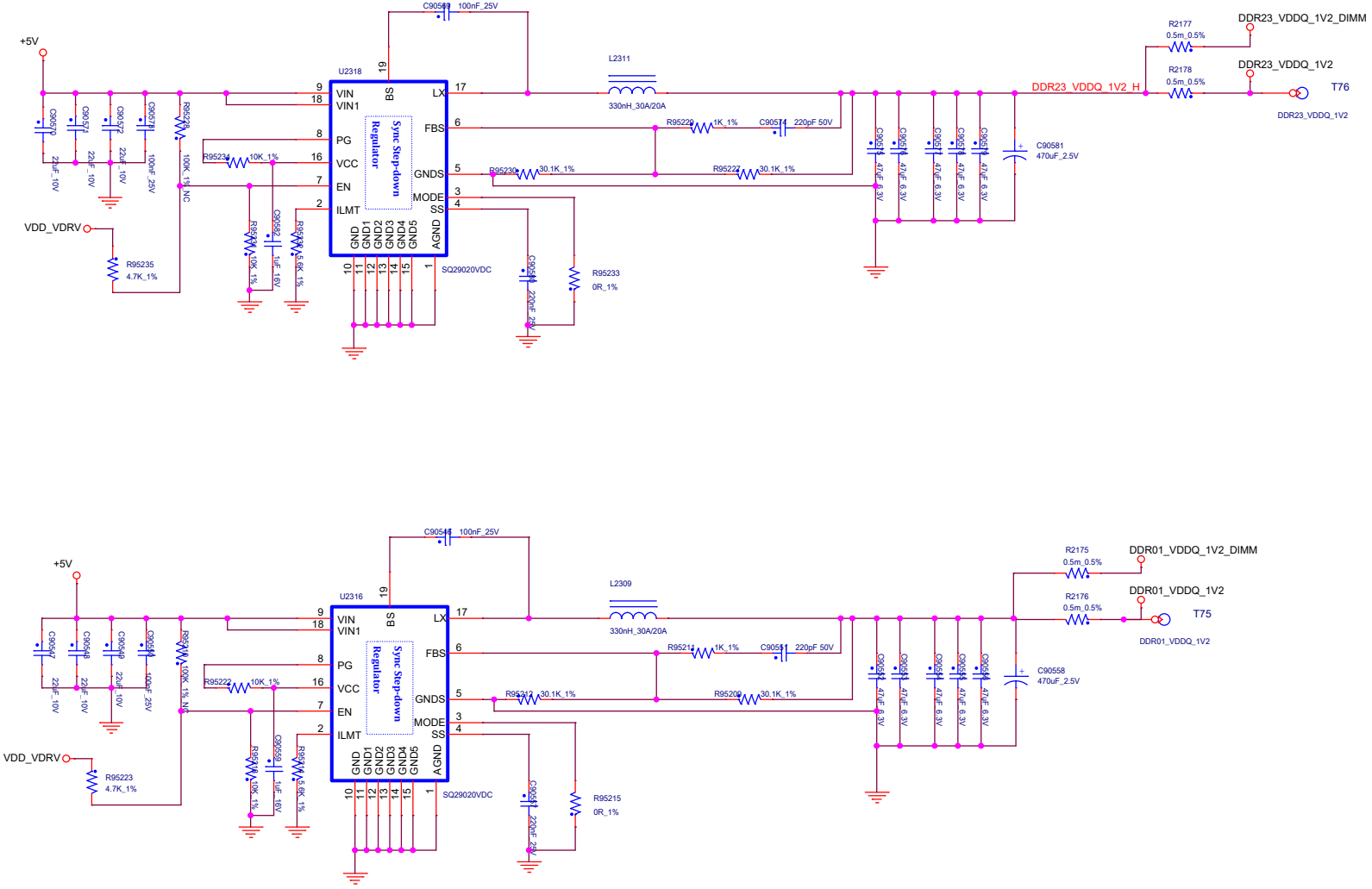

Project:	Pionner		
File:	POWER_VDDQ		
Date:	Friday, January 19, 2024	Rev:	1.2
Designed by:	<designer>	Sheet:	21 of 36

E KEY

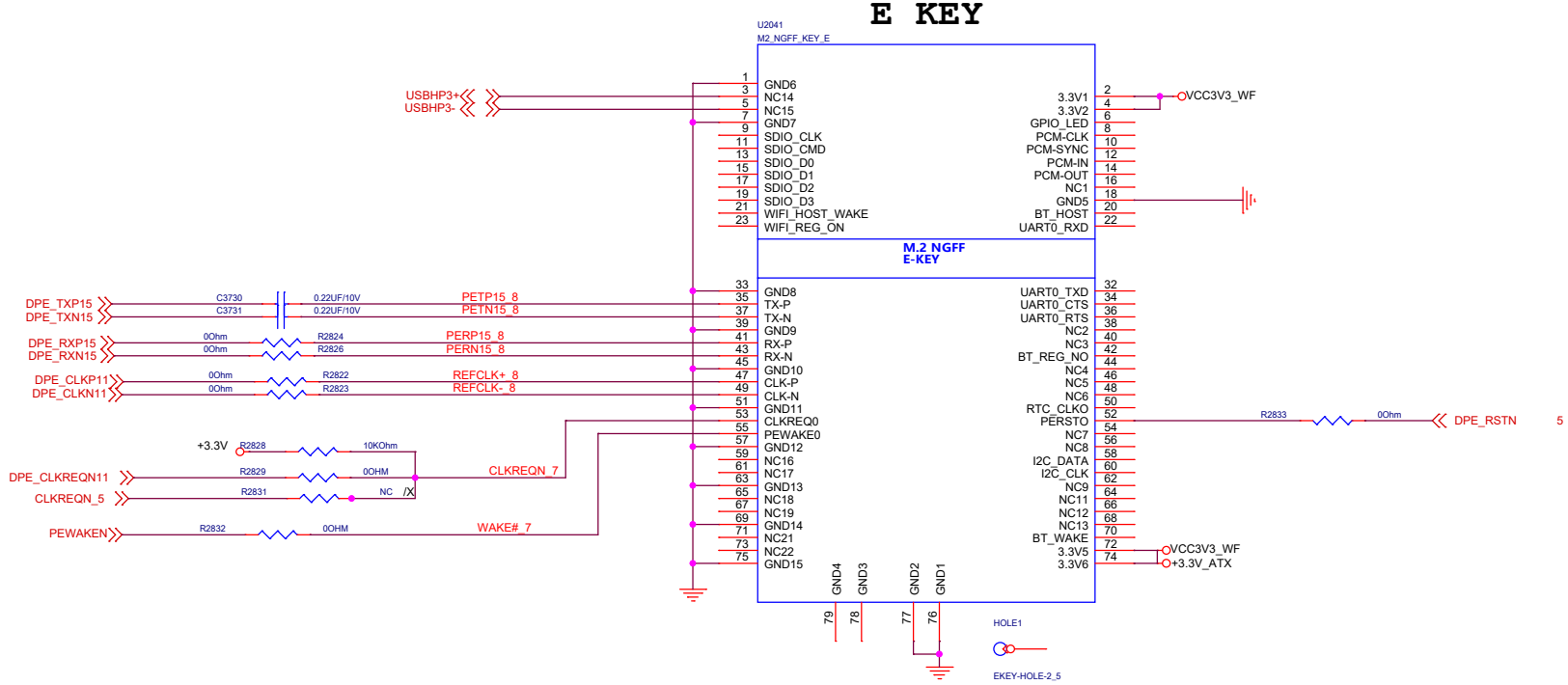

Project:	Pionner		
File:	PCIE_X1-EKEY		
Date:	Friday, January 19, 2024	Rev:	1.2
Designed by:	<designer>	Sheet:	22 of 36

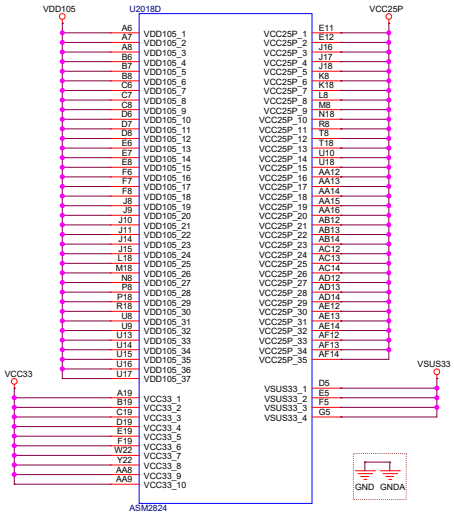

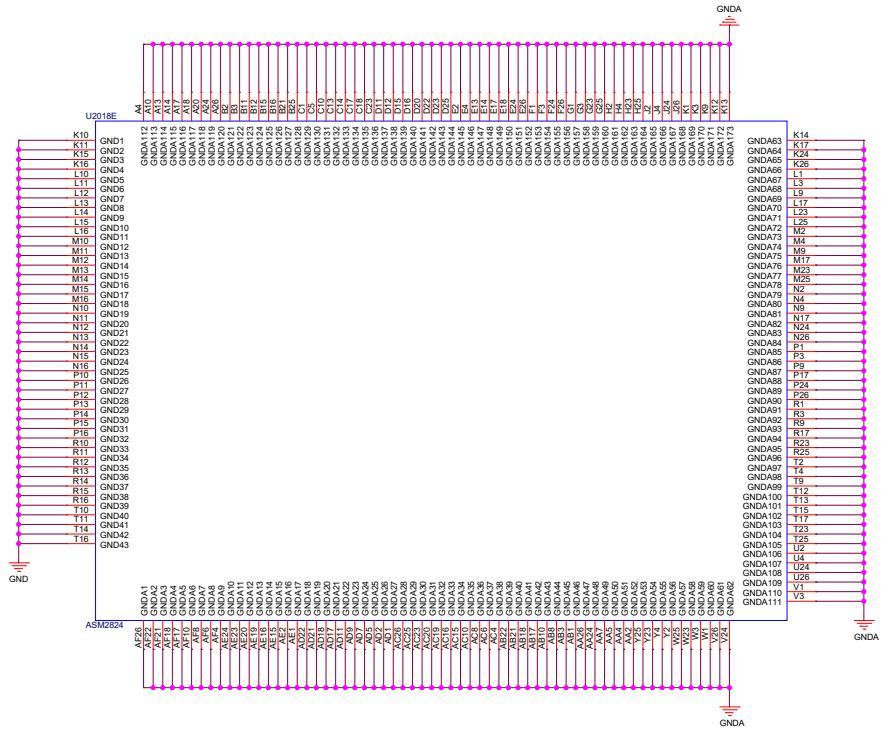

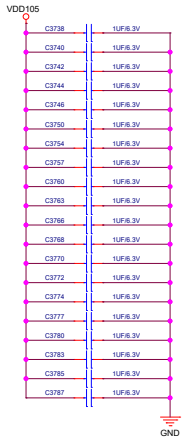

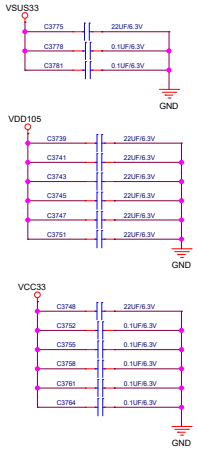

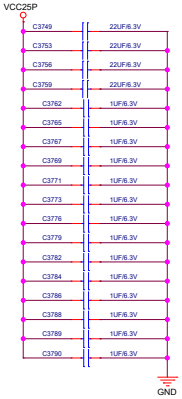

milkV	
Project:	Pionner
File:	ASM2824_POWER/GND
Date:	Friday, January 19, 2024
Rev:	1.2
Designed by:	<designer>
Sheet:	23 of 36

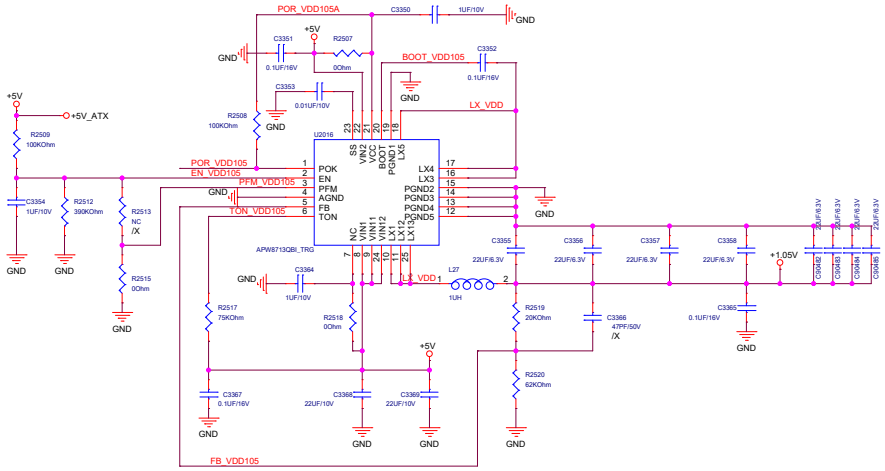

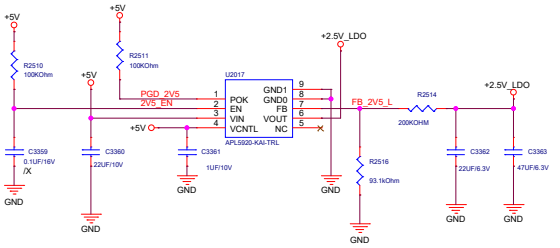

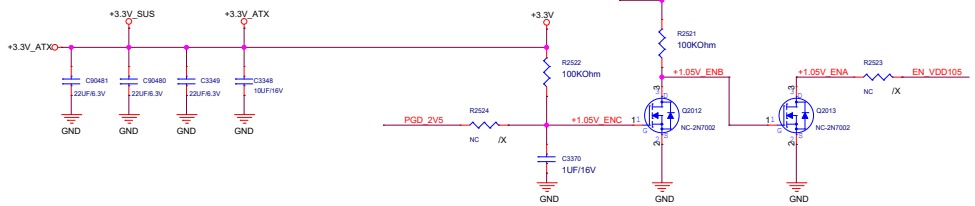

Project:	Pionner		
File:	ASM2824- POWER		
Date:	Friday, January 19, 2024	Rev:	1.2
Designed by:	<designer>	Sheet:	24 of 36

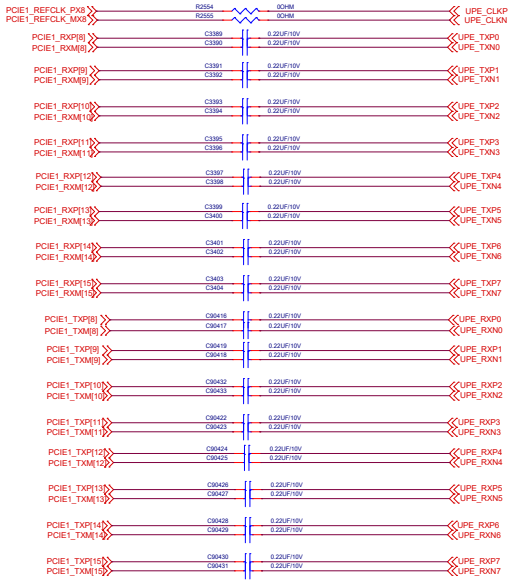

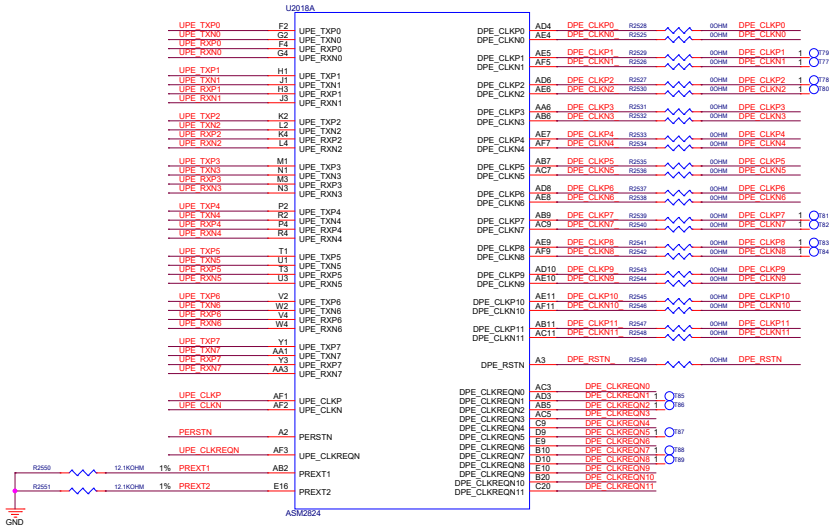

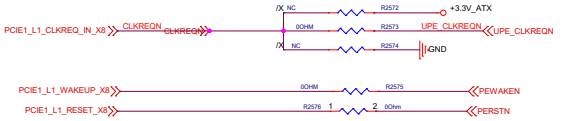

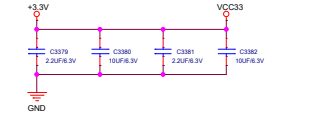

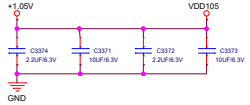

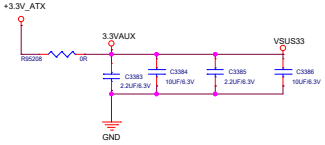

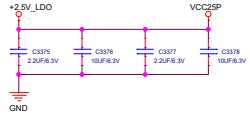

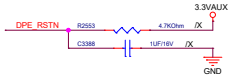

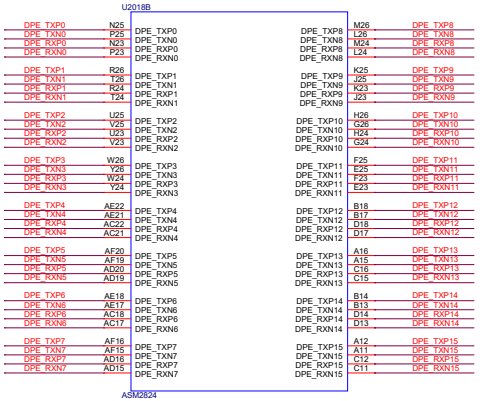

Project:	Pionner
File:	ASM2824_PCIE
Date:	Friday, January 19, 2024
Rev:	1.2
Designed by:	<designer>
Sheet:	25 of 36

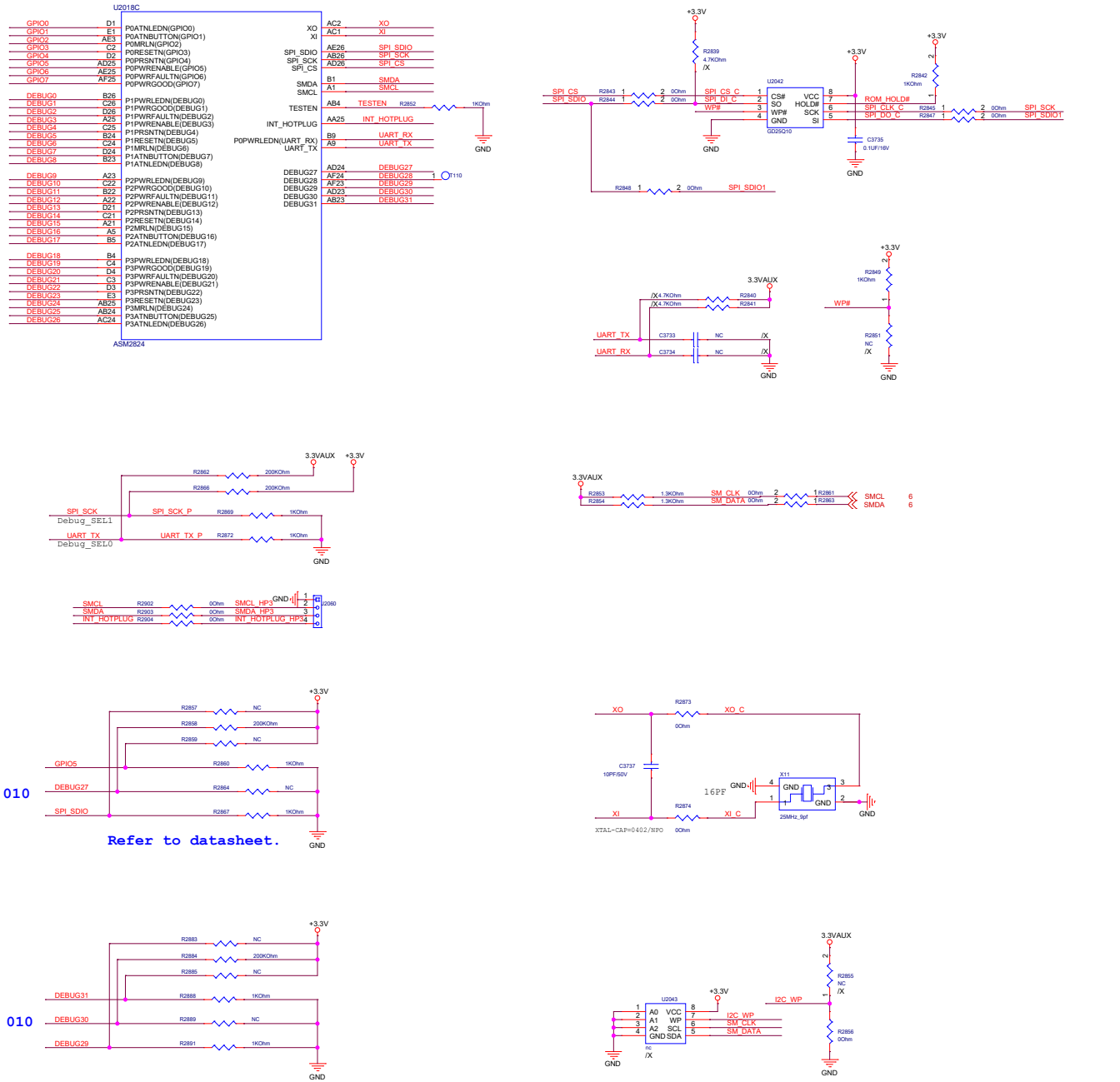

Project:	Pionner
File:	ASM2824_config
Date:	Friday, January 19, 2024
Rev:	1.2
Designed by:	<designer>
Sheet:	26 of 36

M KEY

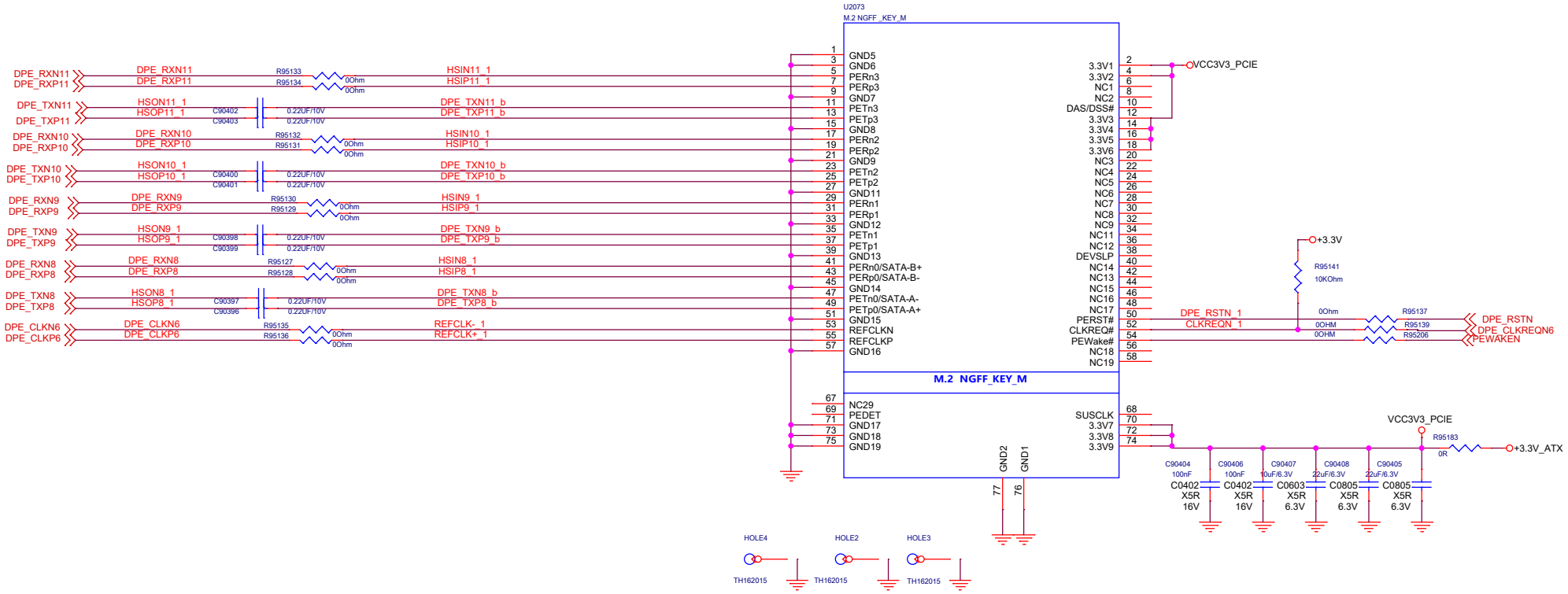

Project:	Pionner		
File:	PCIE_X4 -MKEY2		
Date:	Friday, January 19, 2024	Rev:	1.2
Designed by:	<designer>	Sheet:	27 of 36

MKEY

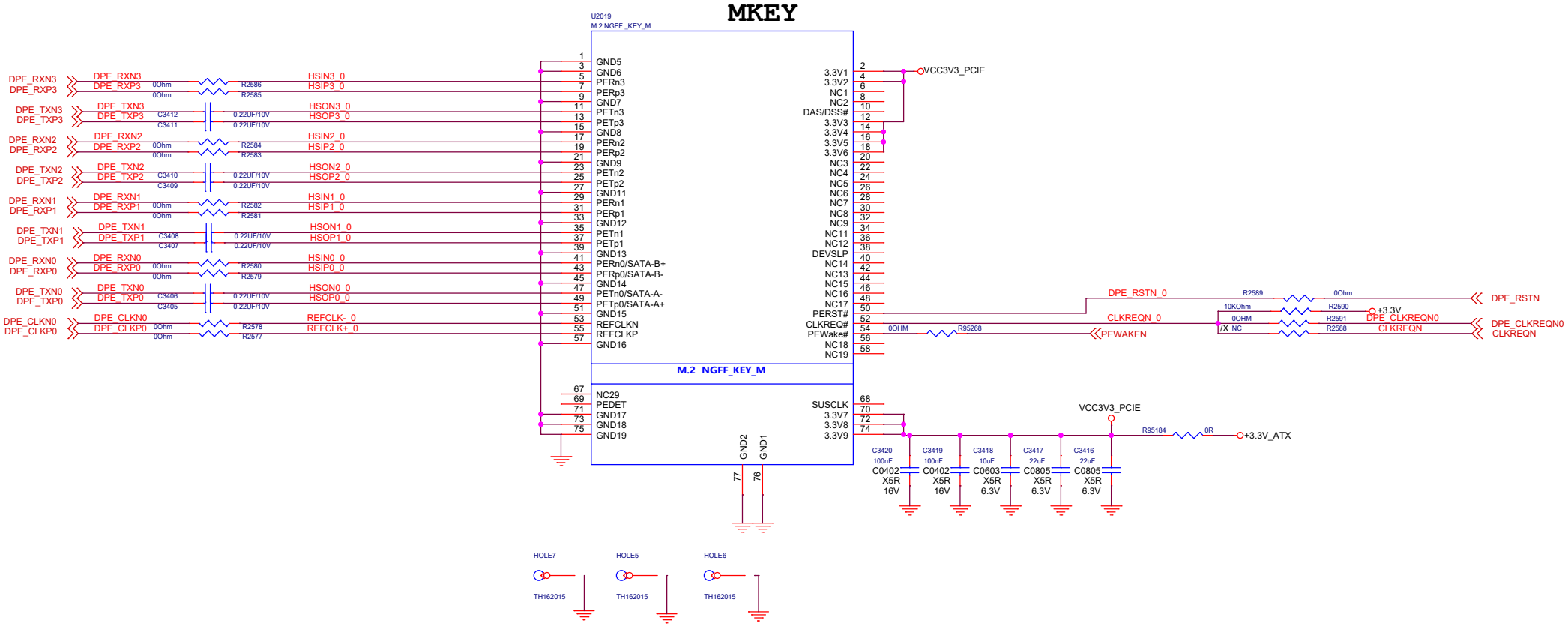

Project:	Pionner		
File:	PCIE_X4 -MKEY1		
Date:	Friday, January 19, 2024	Rev:	1.2
Designed by:	<designer>	Sheet:	28 of 36

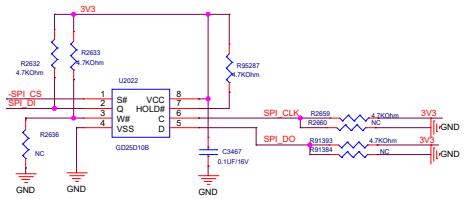

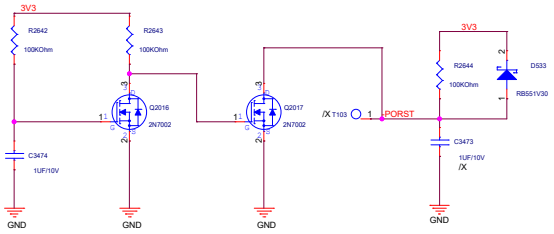

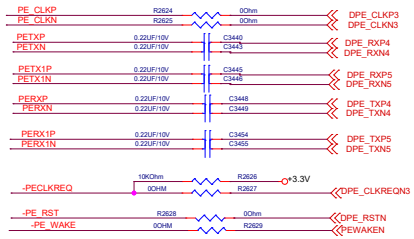

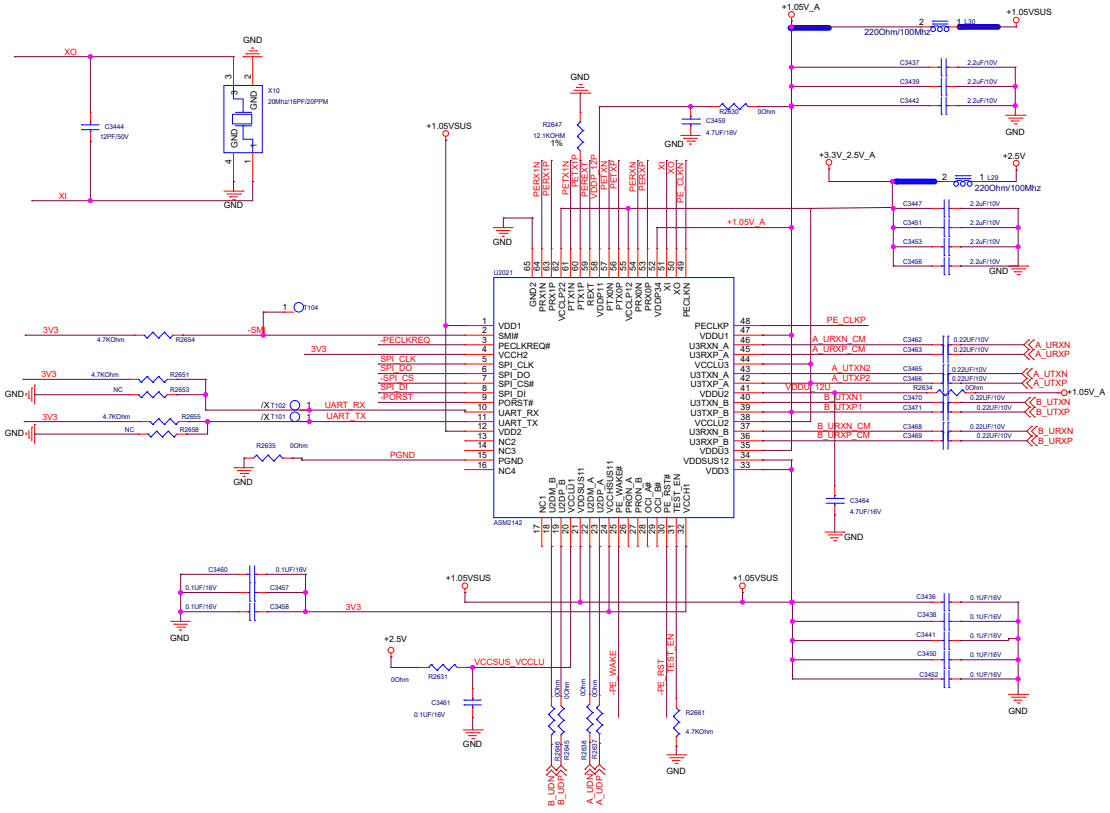

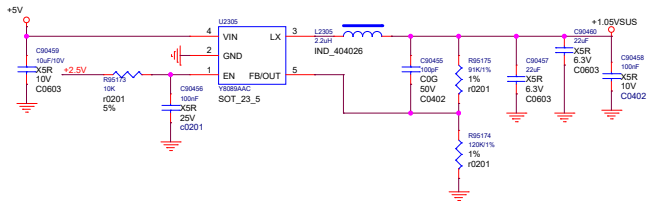

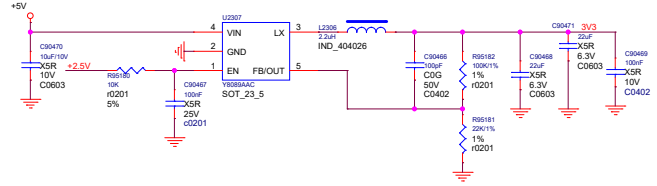

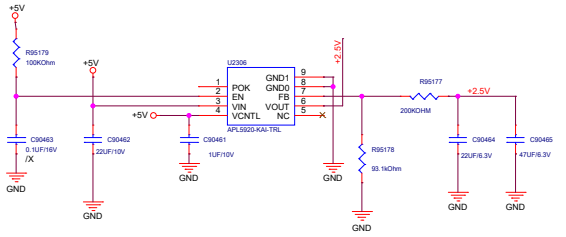

Project:	Pionner
File:	PCIE_X2 -ASM3142
Date:	Friday, January 19, 2024
Rev:	1.2
Designed by	<designer>
Sheet:	29 of 36

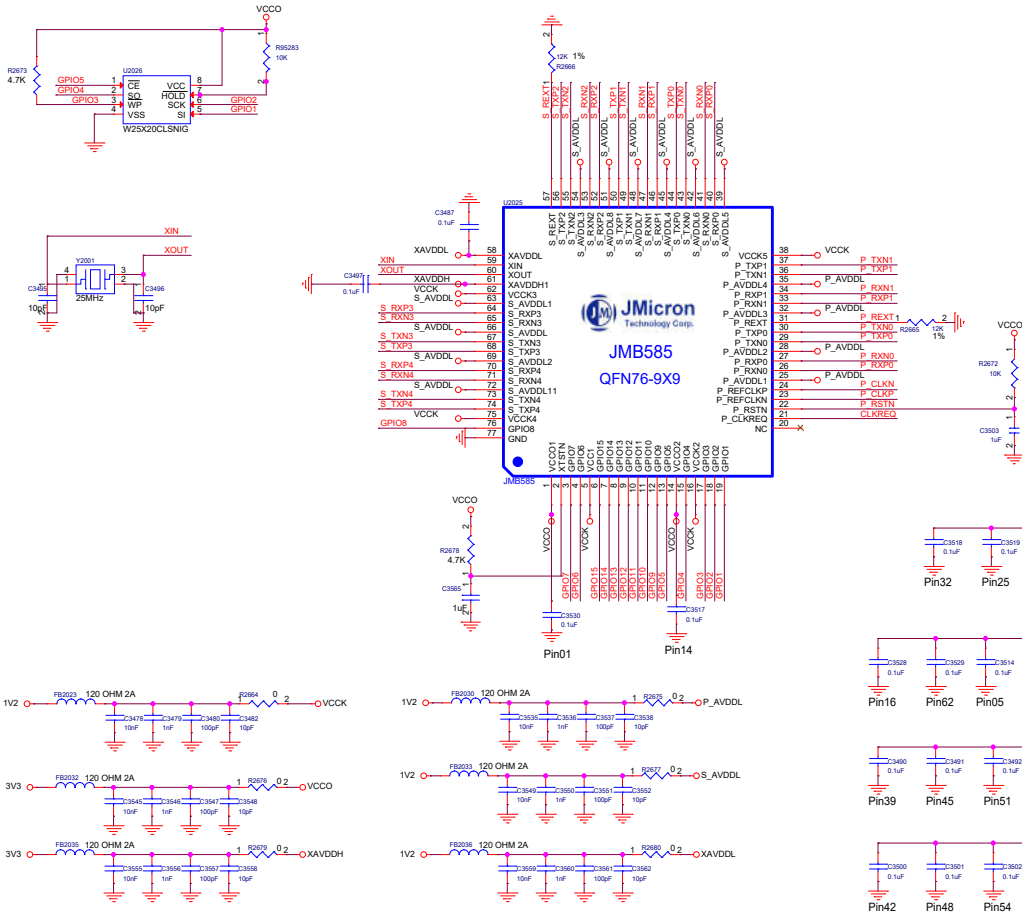

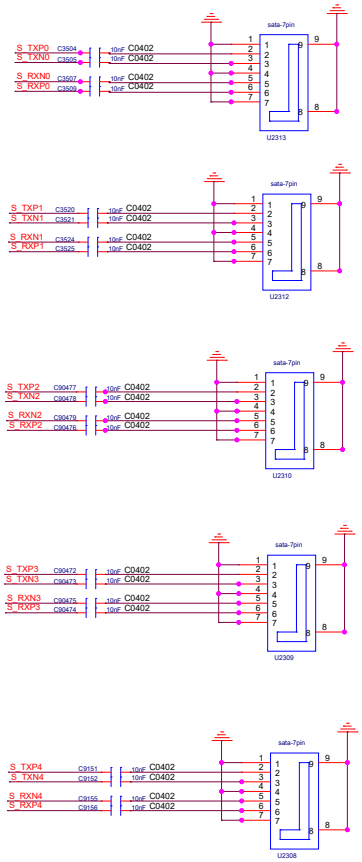

SATA X 5

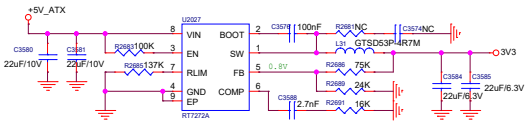

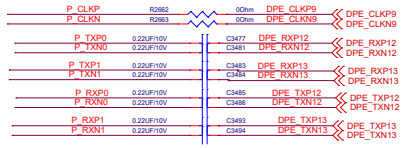

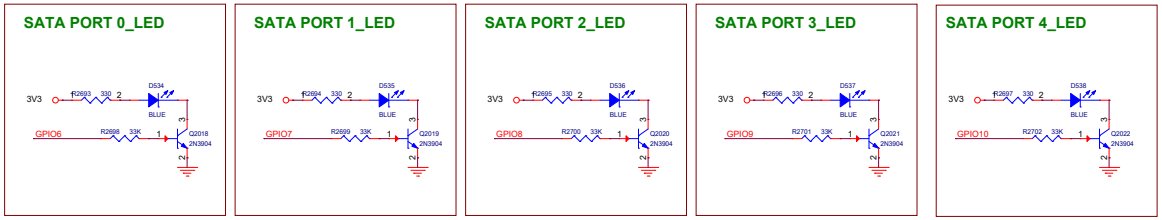

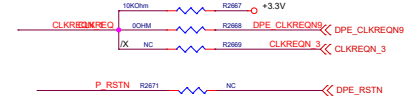

Project:	Pionner
File:	PCIE_X2 JMB585
Date:	Friday, January 19, 2024
Rev:	1.2
Designed by:	<designer>
Sheet:	30 of 36

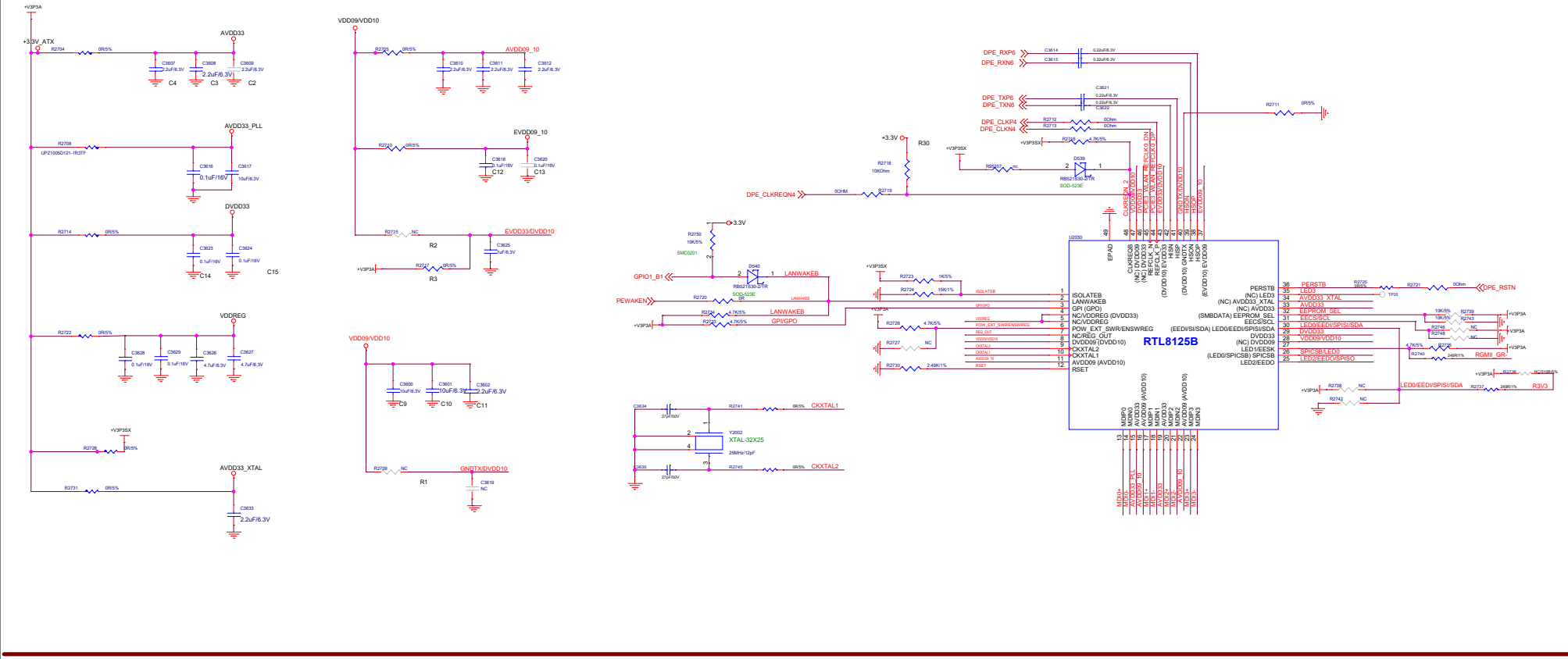

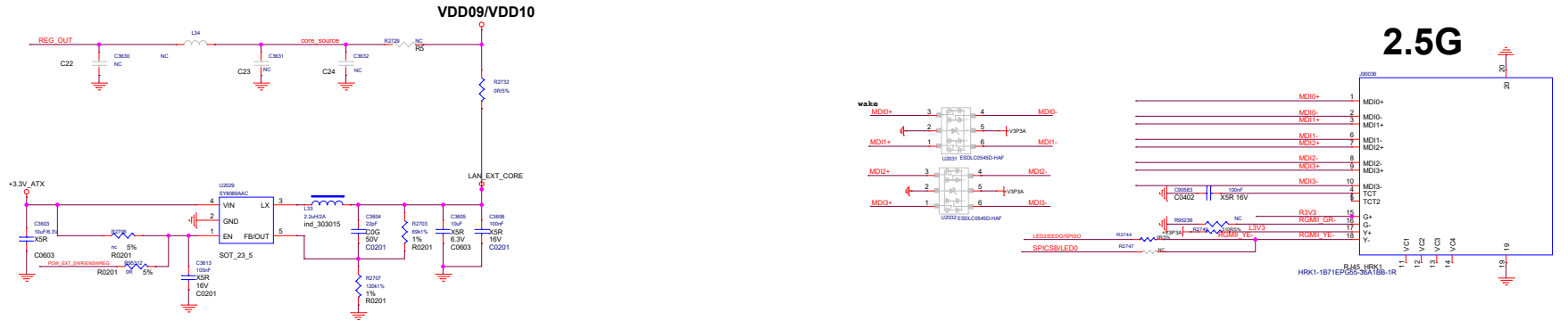

milkV			
Project:	Pionner		
File:	PCIE_X1_RTL8125B_1		
Date:	Friday, January 19, 2024	Rev:	1.2
Designed by:	<designer>	Sheet:	31 of 36

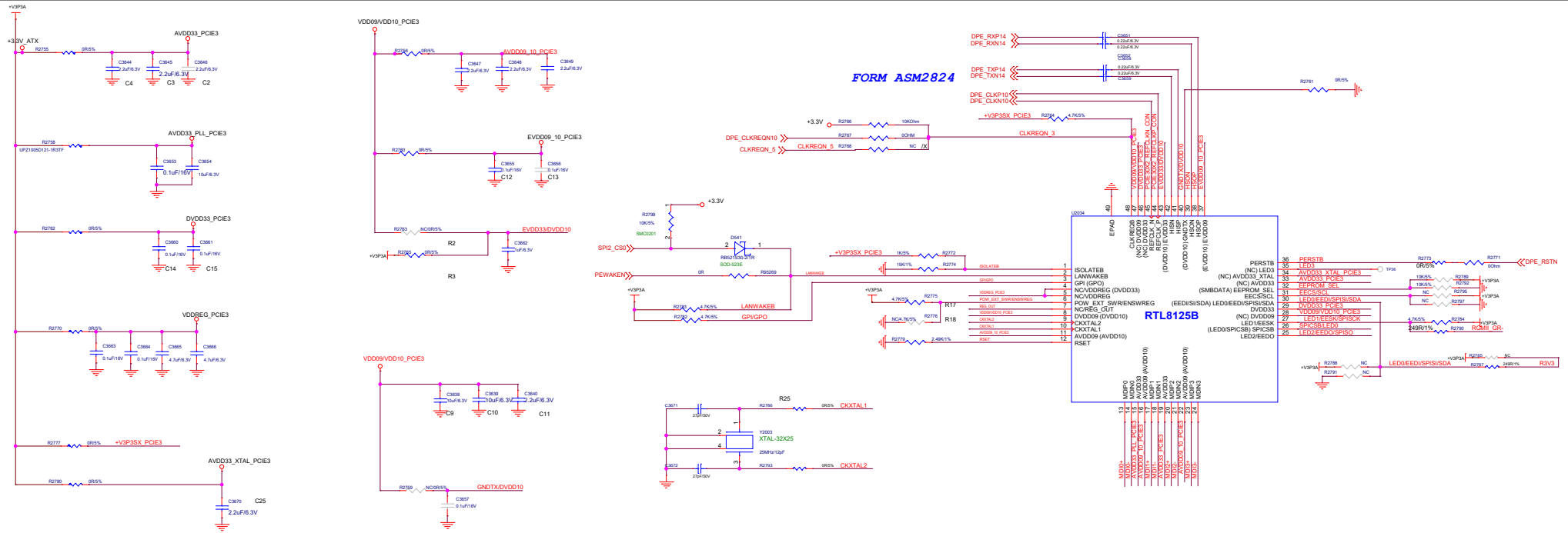

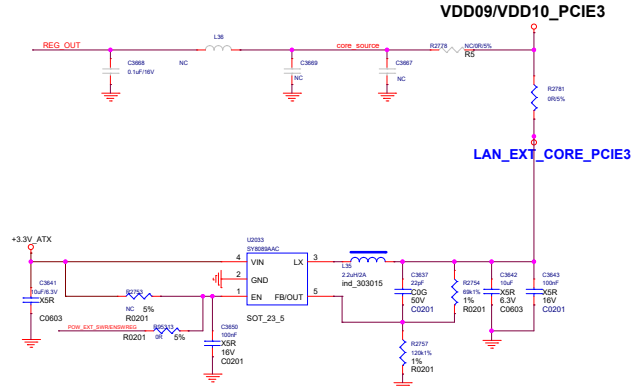

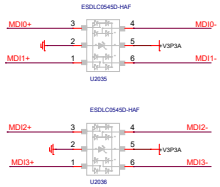

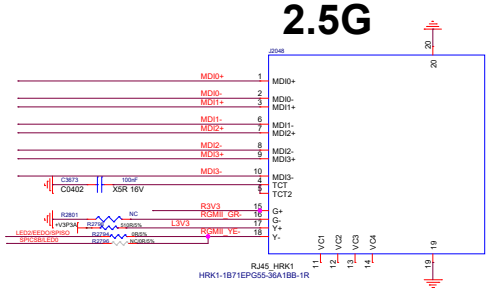

milkV			
Project:	Pionner		
File:	PCIE_X1_RTL8125B_2		
Date:	Friday, January 19, 2024	Rev:	1.2
Designed by:	<designer>	Sheet:	32 of 36

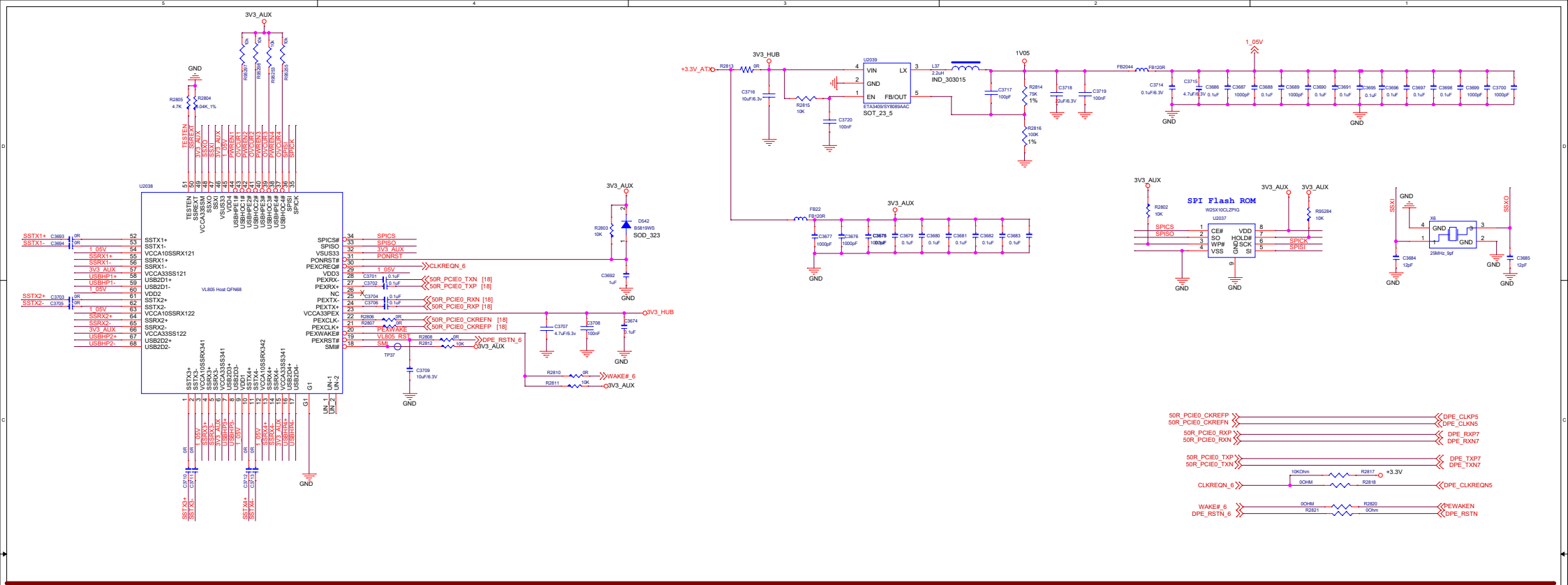

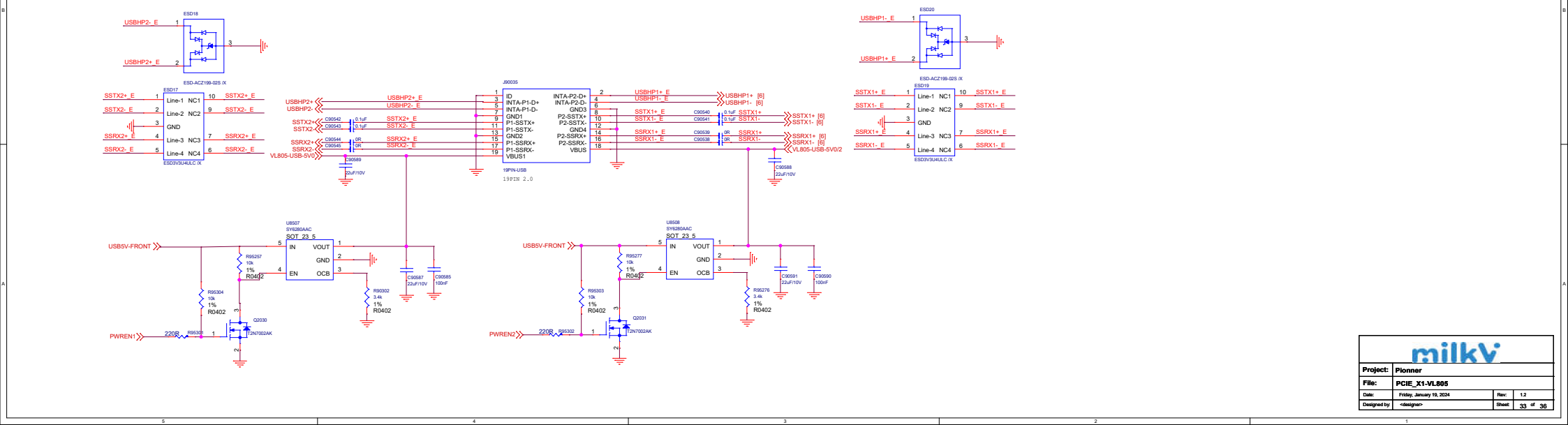

Project:	Pionner
File:	PCIE_X1-VL805
Date:	Friday, January 19, 2024
Rev:	1.2
Designed by:	<designer>
Sheet:	33 of 36

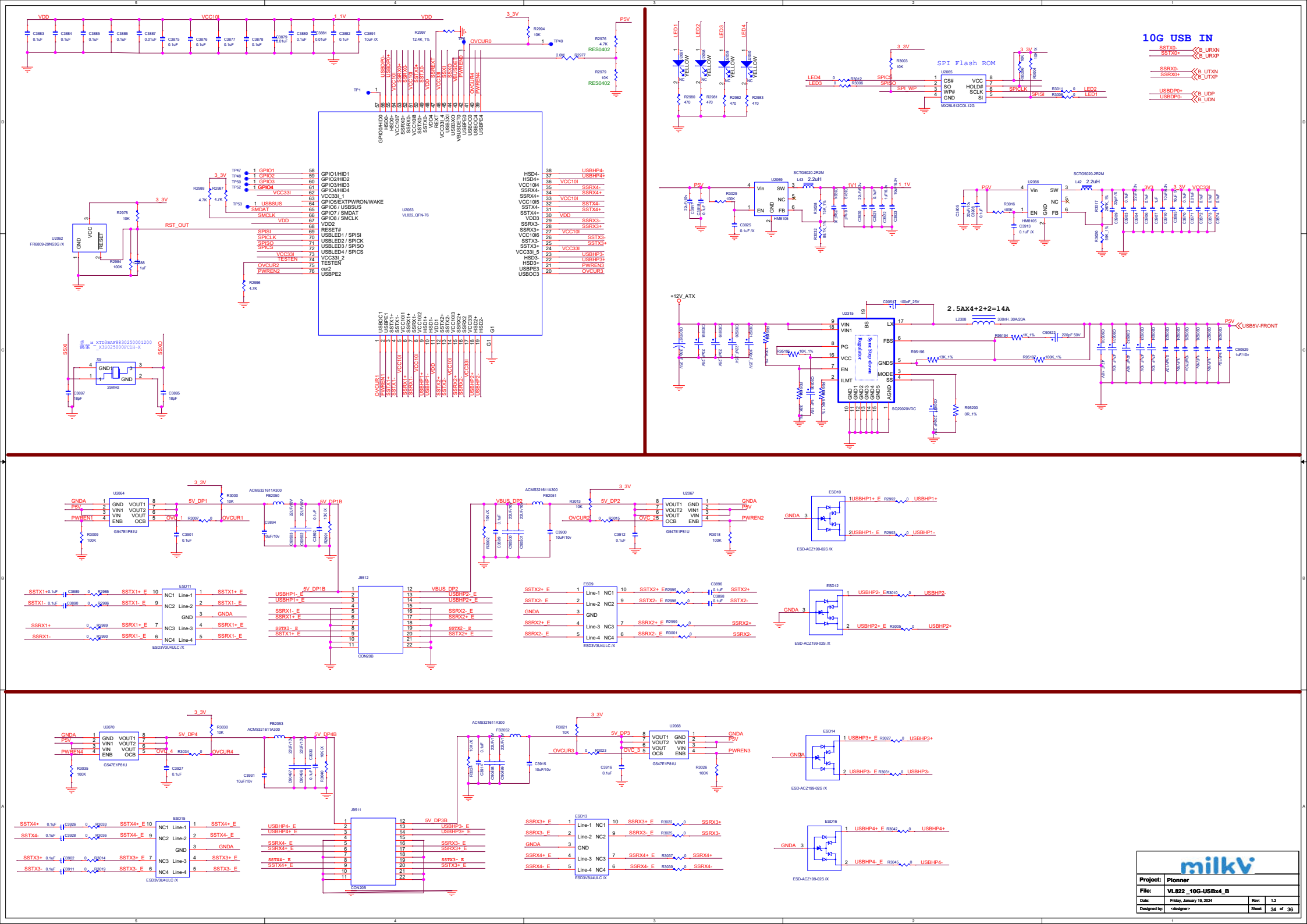
10G USB IN
SSTX0-
SSTX0+
B_URXN
B_URXP
SSRX0-
SSRX0+
B_UTXN
B_UTXP
USBDP0+
USBDP0-
B_UDP
B_UDN
SPI Flash ROM
MX25LS12COI-12G
2.5AX4+2+2=14A
+12V_ATX
P5V
USB5V-FRONT
milkV
Project: Pionner
File: VL822_10G-USBx4_B
Date: Friday, January 19, 2024
Rev: 1.2
Designed by: <designer>
Sheet: 34 of 36

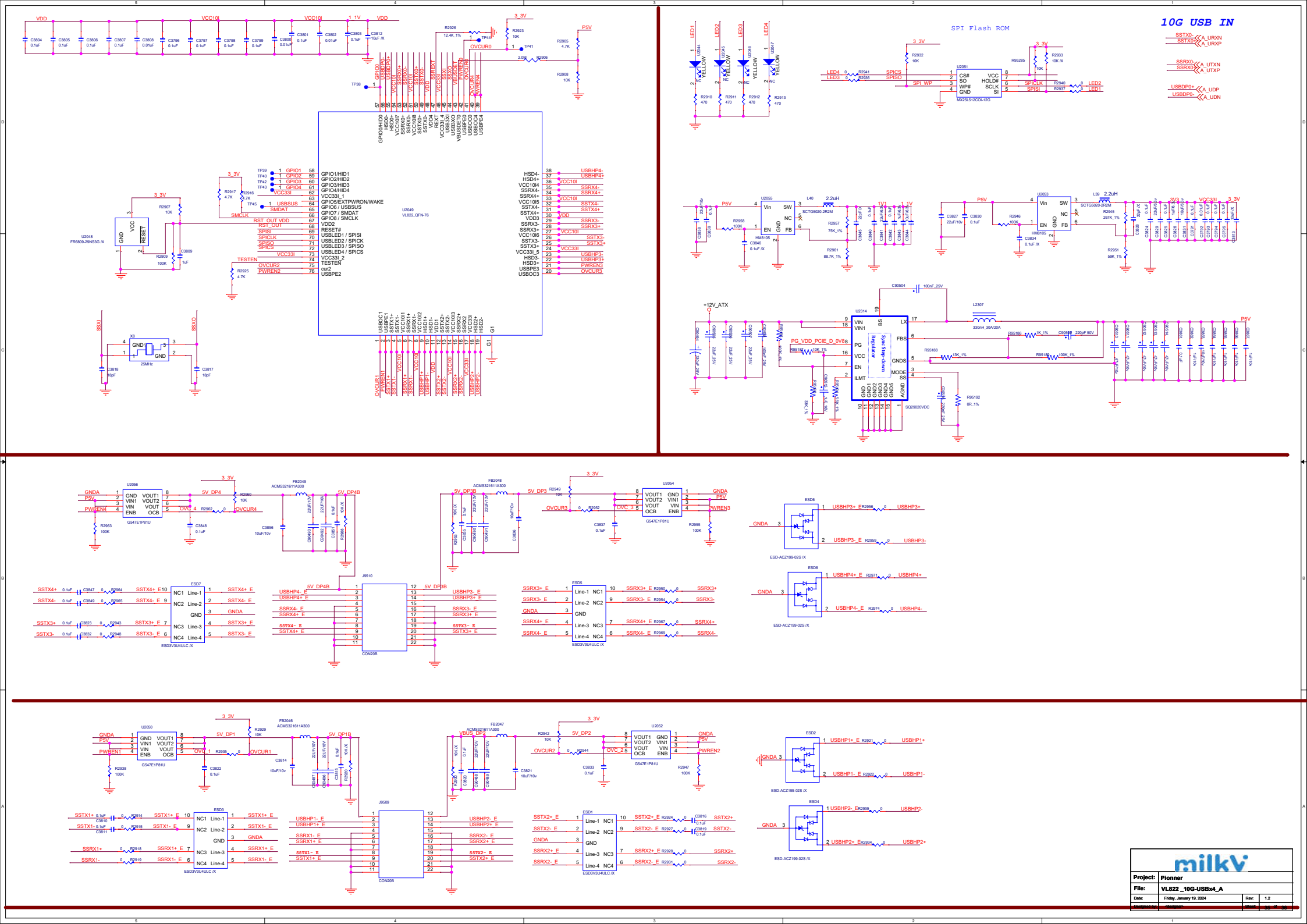
10G USB IN
SPI Flash ROM
U2049
VL822_QFN-76
U2048
FR6809-29N53G /X
U2051
MX25L512COI-12G
U2055
HM8105
U2053
HM8105
U2314
SQ29020VDC
Sync Step-down Regulator
U2056
G547E1P81U
U2054
G547E1P81U
U2050
G547E1P81U
U2052
G547E1P81U
J9510
CON20B
J9509
CON20B
ESD7
ESD3V3U4ULC /X
ESD5
ESD3V3U4ULC /X
ESD6
ESD-ACZ199-02S /X
ESD8
ESD-ACZ199-02S /X
ESD3
ESD3V3U4ULC /X
ESD1
ESD3V3U4ULC /X
ESD2
ESD-ACZ199-02S /X
ESD4
ESD-ACZ199-02S /X
milkV
Project: Pionner
File: VL822 _10G-USBx4_A
Date: Friday, January 19, 2024
Rev: 1.2
Designed by: rdesign.cn
Sheet: 35 of 38

固定孔

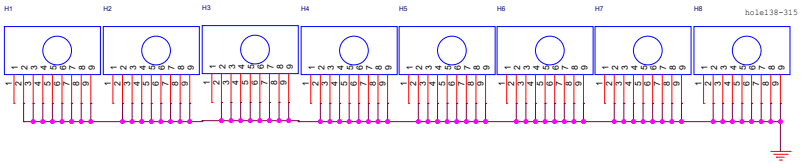

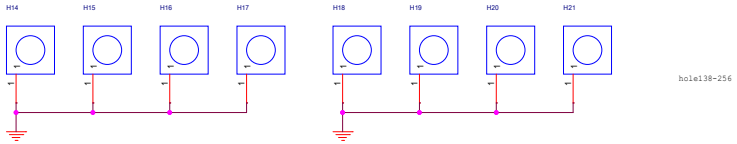

MARK

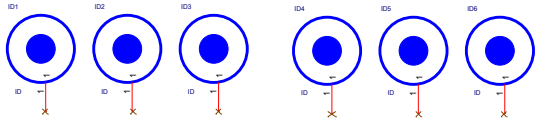

milkV			
Project:	Pionner		
File:	MACH		
Date:	Friday, January 19, 2024	Rev:	1.2
Designed by:	<designer>	Sheet:	36 of 36