SE2205: Algorithms and Data Structures for Object-Oriented Design

Graphs

Dr. Pirathayini Srikantha

Western University

March 11, 2019

Readings/References

- Goodrich (14)

Table of Contents

1. Introduction
2. Graph Definition
3. Graph Representations
4. Graph Applications
   - Graph Searching
   - Topological Ordering in a Graph
   - Supp: Shortest Paths in a Graph
   - Minimal Spanning Trees
   - Supp: Flow Networks
   - Supp: Four-Colour Problem
   - Supp: Hamiltonian Circuits and Travelling Salesman Problem

Table of Contents

1. Introduction
2. Graph Definition
3. Graph Representations
4. Graph Applications
   - Graph Searching
   - Topological Ordering in a Graph
   - Supp: Shortest Paths in a Graph
   - Minimal Spanning Trees
   - Supp: Flow Networks
   - Supp: Four-Colour Problem
   - Supp: Hamiltonian Circuits and Travelling Salesman Problem

Motivation

- A graph consists of a set of nodes that may or may not have **relationships** between one another
- Graphs are a **generalization** of trees with many useful and interesting applications
- **Transportation network**: vertices are cities and links are roads connecting cities
  - Links can represent the distance (**shortest path problem**) or the cost (route with **minimal cost problem**)
- **Oil pipeline network**: vertices are pumping stations and links are pipelines
  - Each link or pipeline can have various diameters (**max flow rate**)
- **Graph exploration**: each vertex is a city and the links are roads
  - **Traversing** a maze (find the exit path from a maze) or the traveller's salesman problem (visit every city before reaching the starting city)

Table of Contents

1. Introduction
2. Graph Definition
3. Graph Representations
4. Graph Applications
   - Graph Searching
   - Topological Ordering in a Graph
   - Supp: Shortest Paths in a Graph
   - Minimal Spanning Trees
   - Supp: Flow Networks
   - Supp: Four-Colour Problem
   - Supp: Hamiltonian Circuits and Travelling Salesman Problem

Edges and Vertices

- **Graph** is represented by $G = (V, E)$ where V is a set containing all the vertices in the graph and E contains all the links in the graph
- Suppose that $v_i, v_j \in V$ and if there is a **relationship** between these nodes then this will be represented by an **edge** $e_k \in E$ where $e_k = (v_i, v_j)$
- If the order of the relationship is important then $(v_i, v_j) \neq (v_j, v_i)$ and these graphs are referred to as digraph
  - If $e_k = (v_i, v_j) \in E$ then v_i is the **origin** and v_j is the **terminus** of the edge
- If the order of relationship between nodes need not be preserved then $(v_i, v_j) = (v_j, v_i)$ and these graphs are referred to as **undirected graphs** or just plain graphs

Edges and Vertices

Undirected

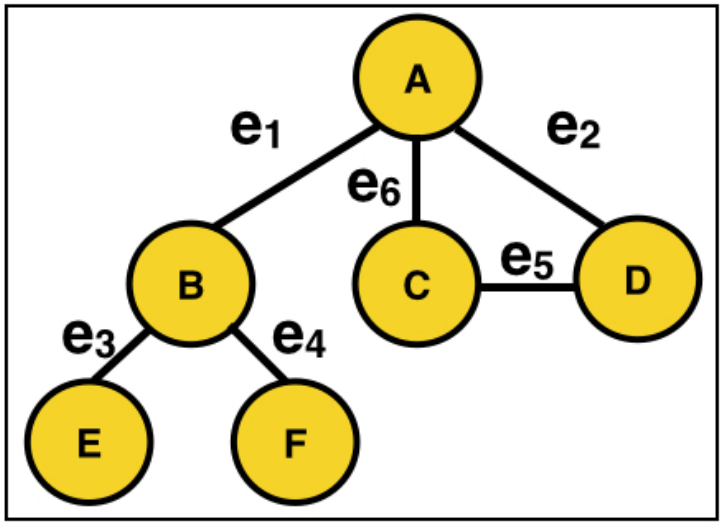

Directed

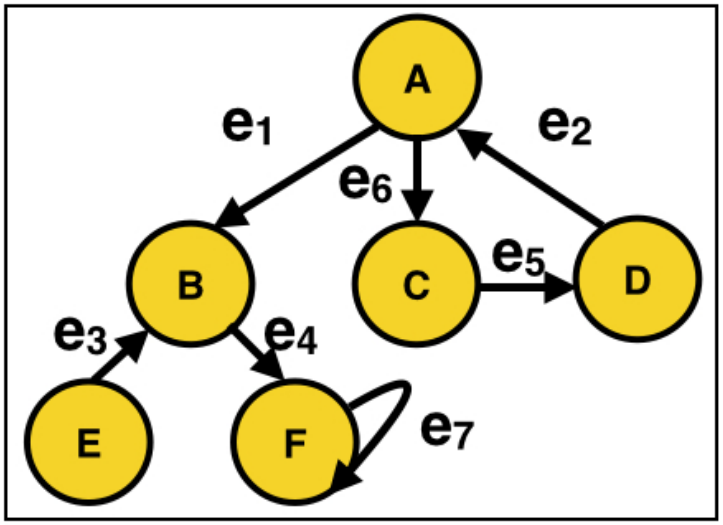

$V=\{A, B, C, D, E, F\}$

$E=\{e_1,e_2,e_3,e_4,e_5,e_6\}$

$e_1=(A,B)$, $e_1=(B,A)$

$E=\{e_1,e_2,e_3,e_4,e_5,e_7\}$

$e_1=(A,B)$, $e_1\neq(B,A)$

Paths, Cycles, and Adjacency

- **Adjacency:** If two vertices are connected by an edge $(v_i, v_j) = e$ then v_j is adjacent to v_i
- **Path:** A collection of edges $p = e_1, e_2, ...e_n$ where at least one node in each edge is adjacent to a node in the consecutive edge
  - E.g. $(v_i, v_j), (v_j, v_k), (v_k, v_l), \ldots$
  - An alternate representation of a path is $p = v_i v_j \ldots v_n$
- **Cycle:** A special type of path $p = v_i v_j \ldots v_n$ where $v_i = v_n$
- Simple cycle: All nodes (with the exception of the first and last nodes) occur only once in a path forming a simple cycle ($n > 3$)

Paths, Cycles, and Adjacency

Undirected

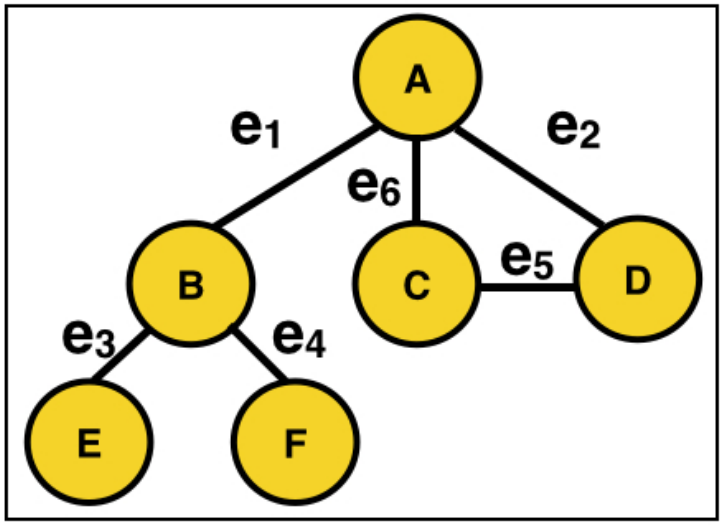

Directed

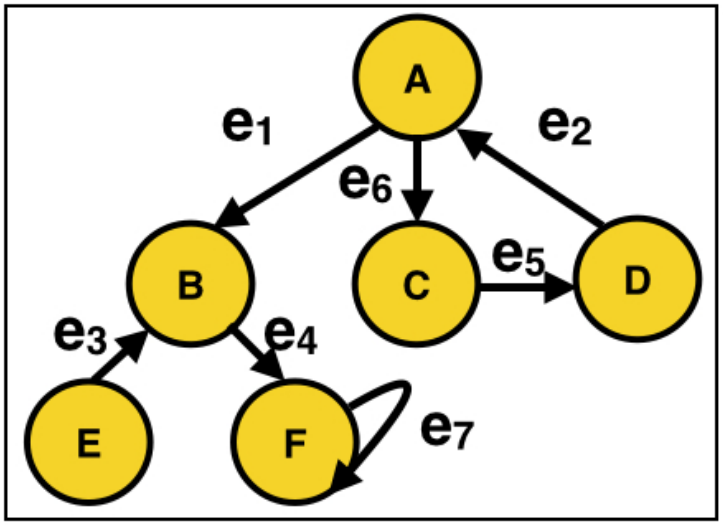

$V=\{A, B, C, D, E, F\}$

$E=\{e_1,e_2,e_3,e_4,e_5,e_6\}$

$e_1=(A,B)$, $e_1=(B,A)$

$P_{AE}=\{e_1,e_3\}$

$P_{AF}=\{e_1,e_4\}$

Cycle: $P_{AA}=\{e_6,e_5,e_2\}$

$E=\{e_1,e_2,e_3,e_4,e_5,e_7\}$

$e_1=(A,B)$, $e_1\neq(B,A)$

$P_{AE}=NA$

$P_{AF}=\{e_1,e_4\}$

Cycle: $P_{AA}=\{e_6,e_5,e_2\}$

Cycle: $P_{FF}=\{e_7\}$

Adjacency Sets

- **Adjacency Sets**: Provides an equivalent definition of a graph

$$G = (V, E)$$

- V_x: set of all vertices adjacent to v_x

$$V_x = \{v_y | (v_x, v_y) \in E\}$$

- The set $A = \{V_x | x \in V\}$ completely represents the graph G and therefore A provides an equivalent definition of G

Adjacency Sets

Undirected

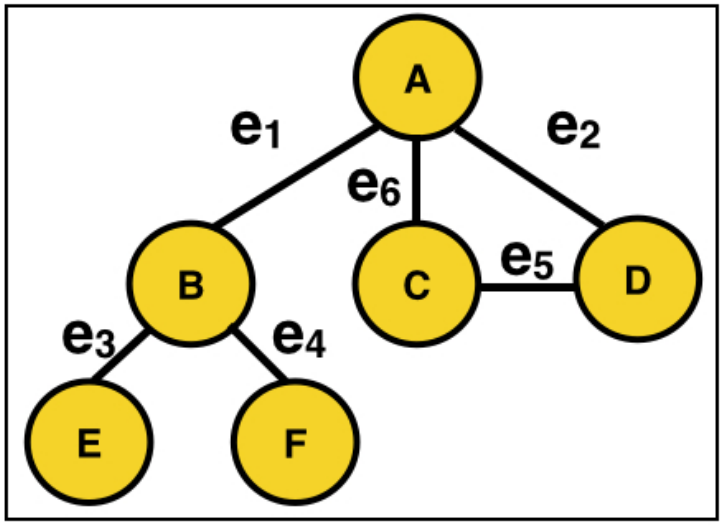

Directed

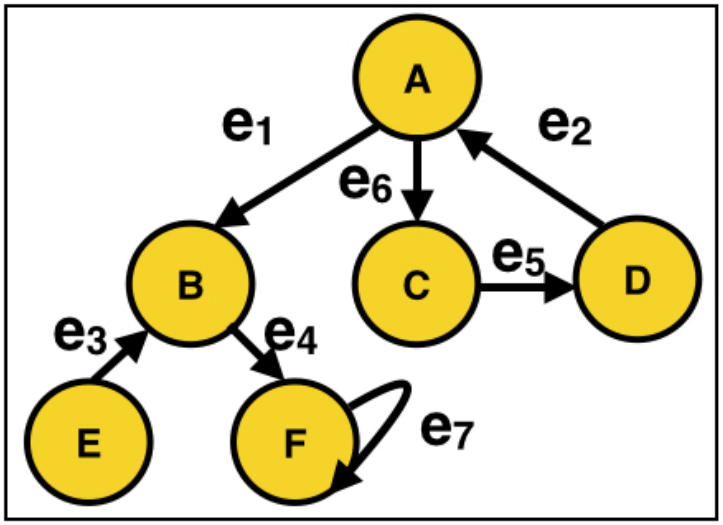

$V=\{A, B, C, D, E, F\}$

$E=\{e_1,e_2,e_3,e_4,e_5,e_6\}$

$e_1=(A,B)$, $e_1=(B,A)$

$V_A=(B,C,D)$

$E=\{e_1,e_2,e_3,e_4,e_5,e_7\}$

$e_1=(A,B)$, $e_1\neq(B,A)$

$V_A=(B,C)$

Vertex Metrics

Undirected Graph

- **Degree** of a vertex v_x: Number of edges in which v_x is one of the endpoint

Directed Graph

- **Predecessors** of v_x: $Pred(v_x) = \{v_y | (v_y, v_x) \in E\}$
- **Successors** of v_x: $Succ(v_x) = \{v_y | (v_x, v_y) \in E\}$
- **In-degree** of v_x: number of nodes in $Pred(v_x)$
- **Out-degree** of v_x: number of nodes in $Succ(v_x)$

Vertex Metrics

Undirected

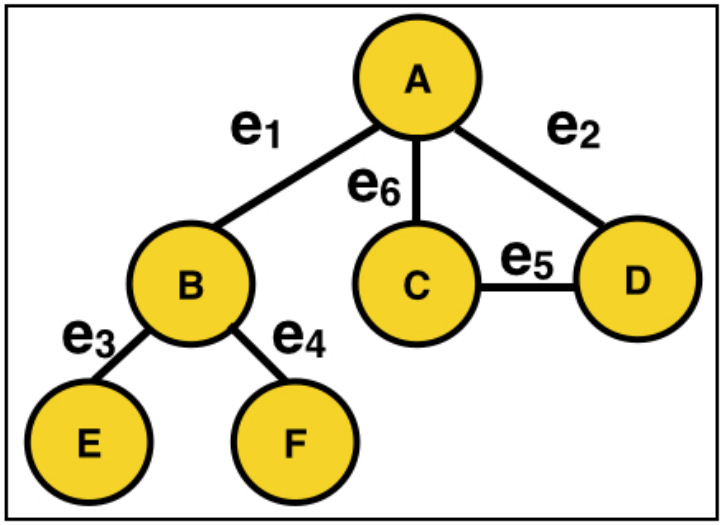

Directed

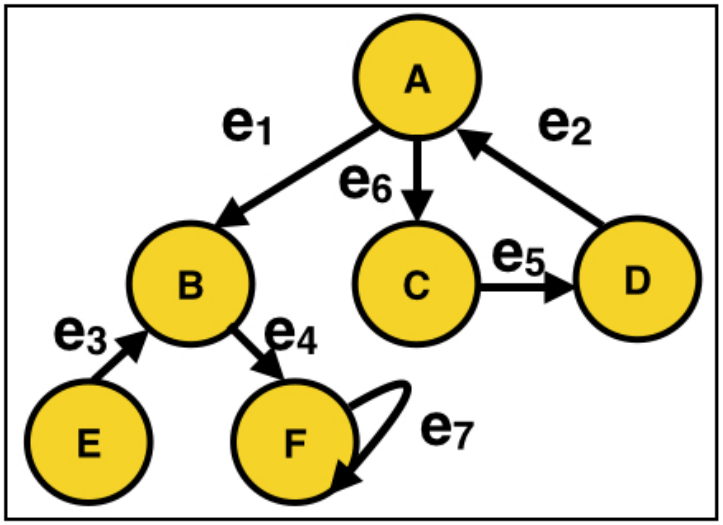

V={A, B, C, D, E, F}

E={e_1,e_2,e_3,e_4,e_5,e_6}

Deg(A)=3

E={e_1,e_2,e_3,e_4,e_5,e_7}

Pred(A)=D

Succ(A)=B,C

In-degree(A)=1

Out-degree(A)=2

Connectivity and Components

Undirected Graph: Ordering does not matter

- **Connected**: $v_i, v_m \in V$ are connected if there exists a path between these vertices
- **Connected Component S**: $S \subset V$ is a set containing vertices that are all connected to one another
- **Maximal Connected Component T**: Largest subset of nodes that are all connected to one another
- If an undirected graph has distinct $T_1, T_2 \ldots T_k$ then $T_i \cap T_j = \varnothing \; \forall i, j \in \{1 \ldots k\}$

Connectivity and Components

Undirected

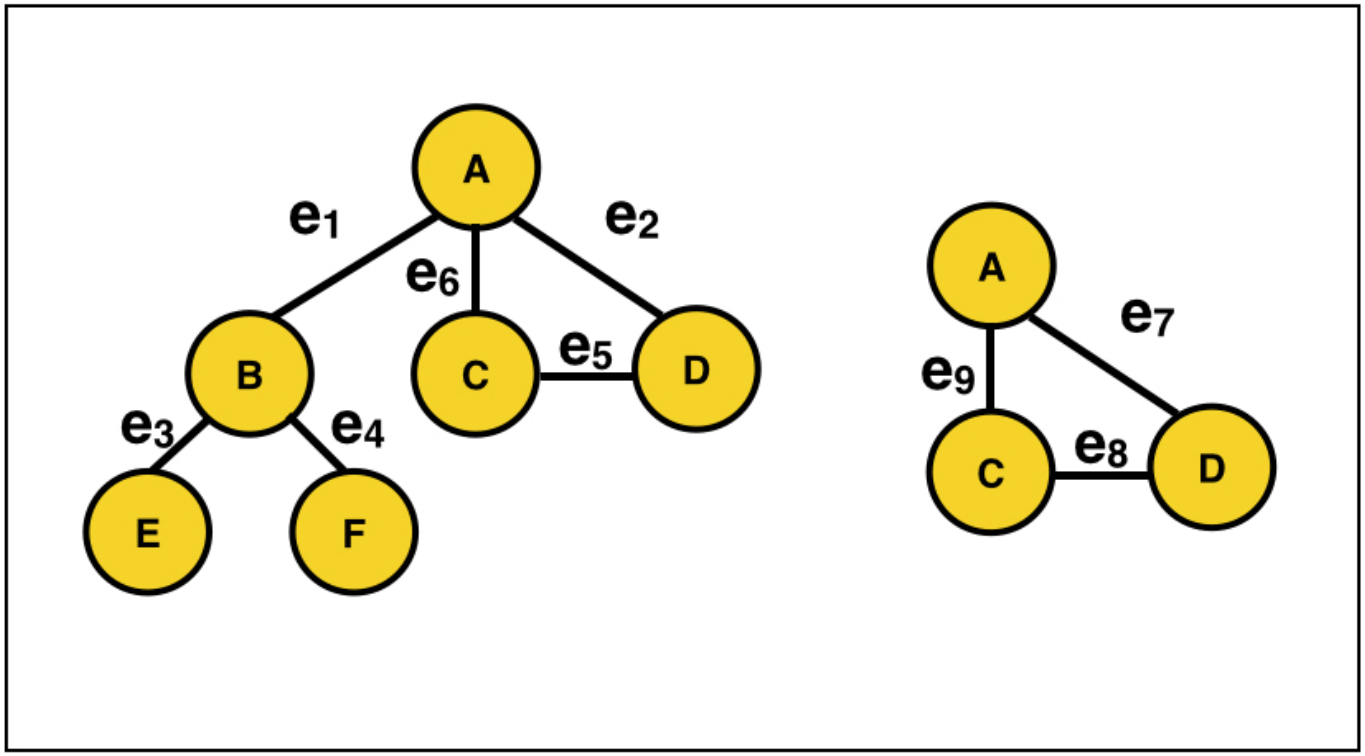

Connectivity and Components

Undirected

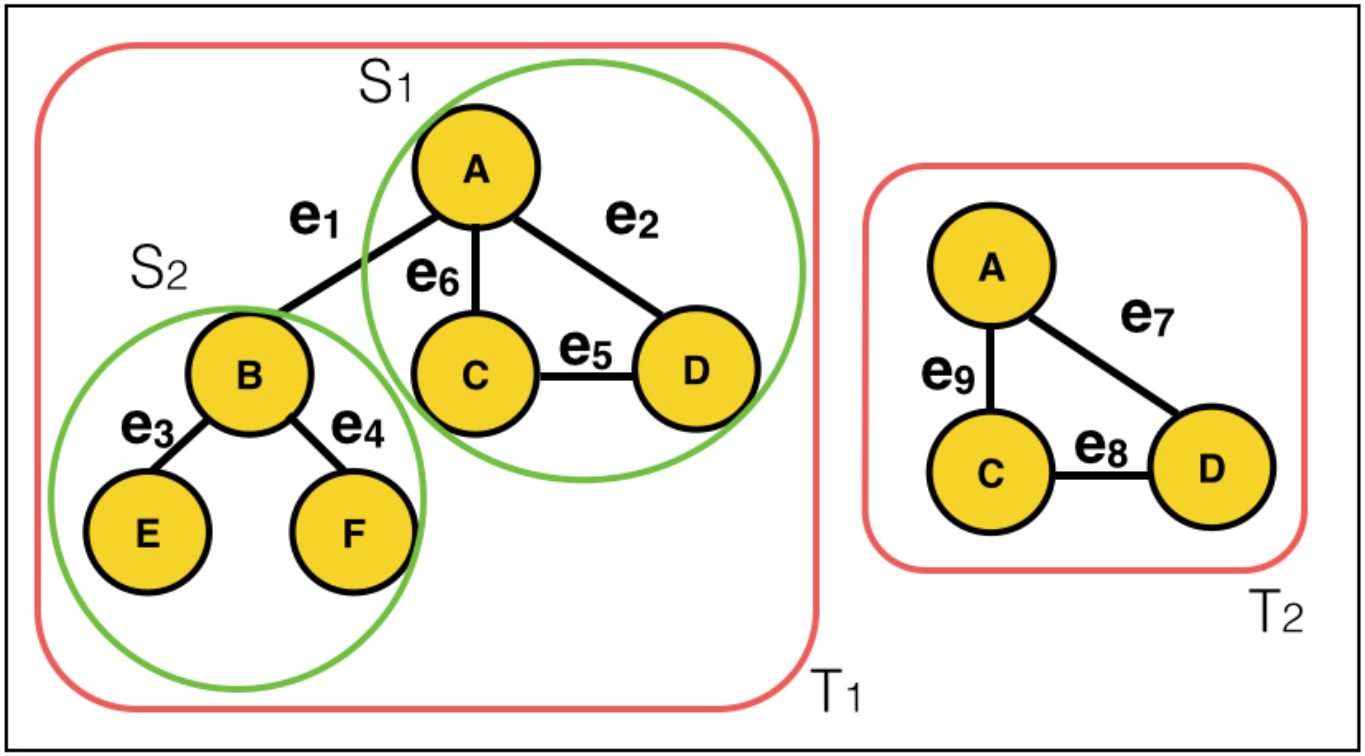

$S_1 \subset T_1$

$S_2 \subset T_1$

$T_2 \cap T_1 = \emptyset$

Connectivity and Components

Directed Graph: Ordering does matter

- **Connected**: $v_i, v_m \in V$ are connected if there exists a path between these vertices (direction of edges must be same in the path)
- **Strongly connected S**: All $v_i, v_m \in S$ are connected to one another
- **Weakly connected S**: $v_i, v_m \in S$ where either v_i is connected to v_j or v_j is connected to v_i (both statements are not true at once)

Connectivity and Components

Directed

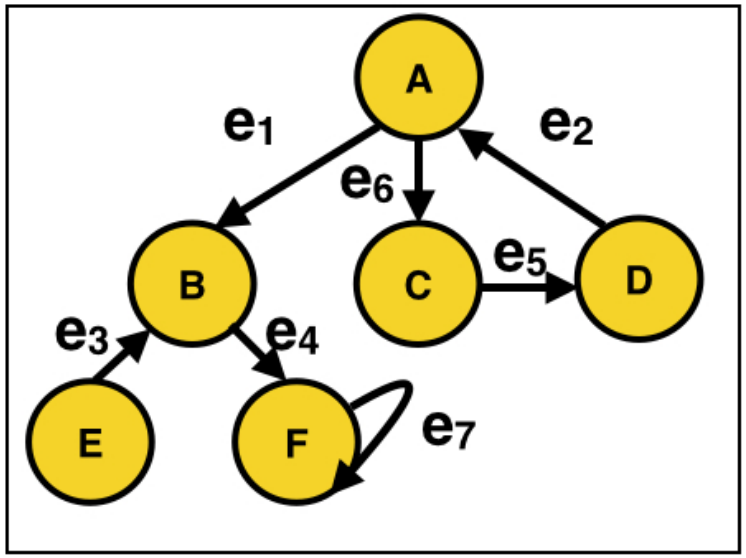

Weakly Connected

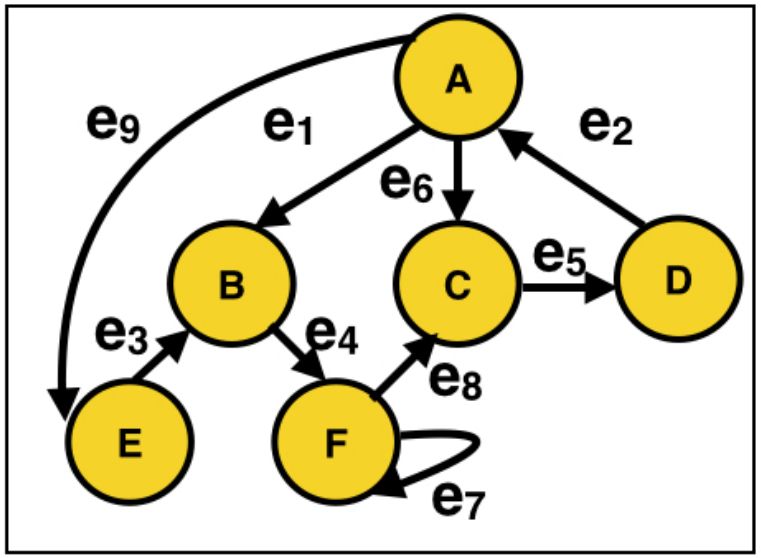

Strongly Connected

Table of Contents

1. Introduction
2. Graph Definition
3. Graph Representations
4. Graph Applications
   - Graph Searching
   - Topological Ordering in a Graph
   - Supp: Shortest Paths in a Graph
   - Minimal Spanning Trees
   - Supp: Flow Networks
   - Supp: Four-Colour Problem
   - Supp: Hamiltonian Circuits and Travelling Salesman Problem

Graph Representation

- In a **graph representation**, it is necessary to include all vertices/nodes (V) and edges present (E) in the graph
- Two different methods can capture all necessary information about a graph
- **Adjacency Matrices**
- **Adjacency Lists**

Adjacency Matrix

Graph Representation

An **adjacency matrix** A representation of a graph is composed of n rows and n columns (i.e. there are n vertices/nodes in the graph)

Undirected Graph

- If there is an edge between (v_i, v_j), then both entries $A[i][j]$ and $A[j][i]$ are set to 1
- Thus A is a **symmetric** matrix

Directed Graph

- Rows are originating nodes and columns are terminus nodes
- If $(v_i, v_j) \in E$, then $A[i][j]$ is set to 1
- When (v_i, v_j) do not form an edge, $A[i][j]$ is set to 0
- A is not always symmetric

If edges have weight, then weights are listed explicitly in the corresponding entry instead of 1

Graph Representation: Adjacency Matrix Example

Directed Graph *G*

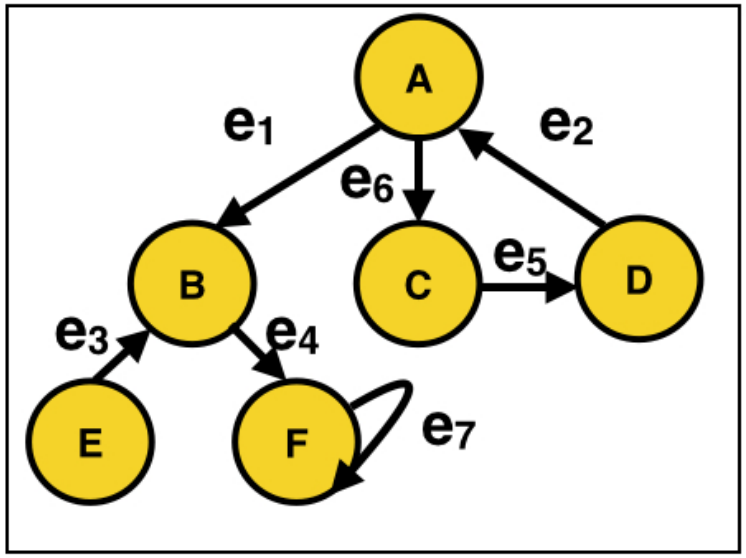

Adjacency Matrix for *G*

	A	B	C	D	E	F
A	0	1	1	0	0	0
B	0	0	0	0	0	1
C	0	0	0	1	0	0
D	1	0	0	0	0	0
E	0	1	0	0	0	0
F	0	0	0	0	0	1

Graph Representation: Adjacency Matrix Example

Weighted Directed Graph *G*

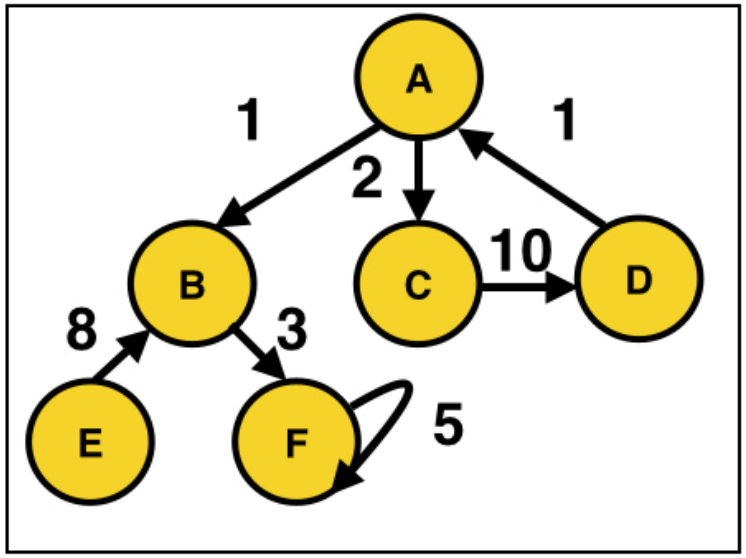

Adjacency Matrix for *G*

	A	B	C	D	E	F
A	0	1	2	0	0	0
B	0	0	0	0	0	3
C	0	0	0	10	0	0
D	1	0	0	0	0	0
E	0	8	0	0	0	0
F	0	0	0	0	0	5

Graph Representation: Adjacency Matrix Example

Undirected Graph *G*

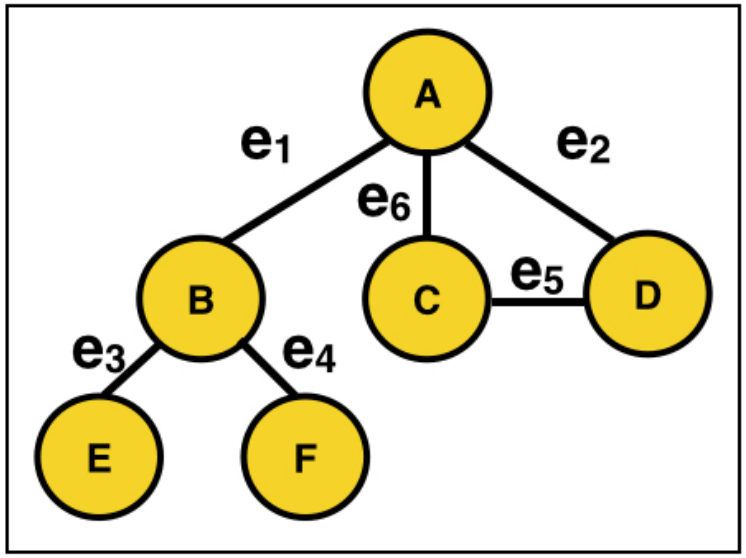

Adjacency Matrix for *G*

	A	B	C	D	E	F
A	0	1	1	1	0	0
B	1	0	0	0	1	1
C	1	0	0	1	0	0
D	1	0	1	0	0	0
E	0	1	0	0	0	0
F	0	1	0	0	0	0

Graph Representation: Adjacency Matrix Example

Weighted Undirected Graph *G*

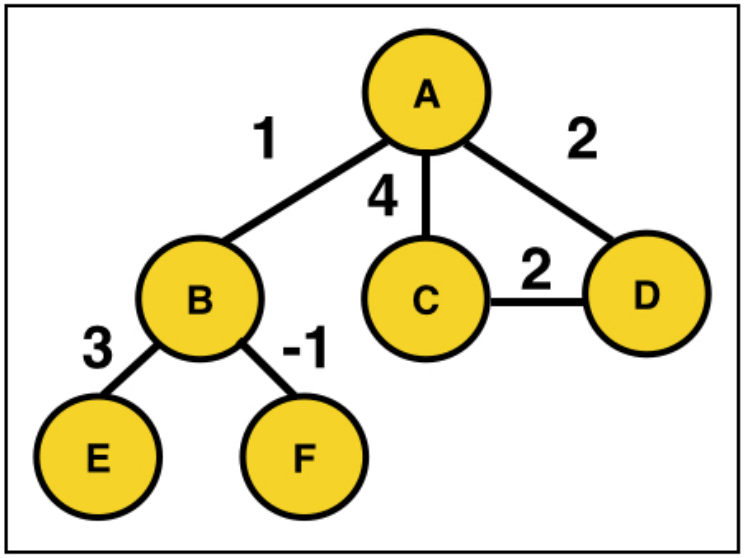

Adjacency Matrix for *G*

	A	B	C	D	E	F
A	0	1	4	2	0	0
B	1	0	0	0	3	-1
C	4	0	0	2	0	0
D	2	0	2	0	0	0
E	0	3	0	0	0	0
F	0	-1	0	0	0	0

Adjacency List

Graph Representation

- An **adjacency list** is another method of representing a graph
- **Linked lists** are engaged to form an **adjacency list**
- Information about every combination of edges possible in the graph is **not** stored in adjacency lists
- An array of n references is created where each element in the array represents a node in the graph
- A linked list residing in the ith index of the array represents all edges where v_i is the originating node (all non-zero columns for the ith entry in the adjacency matrix)
- The jth node in the ith linked list represents a terminating node forming the edge (v_i, v_j)

Graph Representation: Adjacency List Example

Weighted Directed Graph *G*

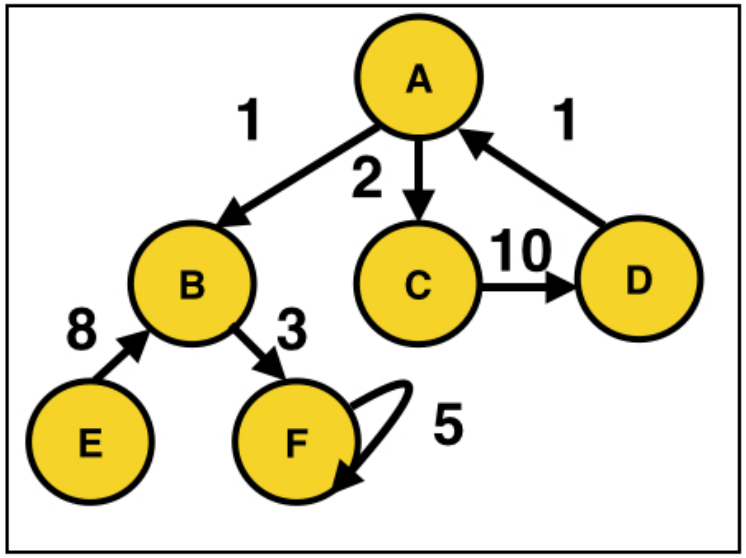

Adjacency List for *G*

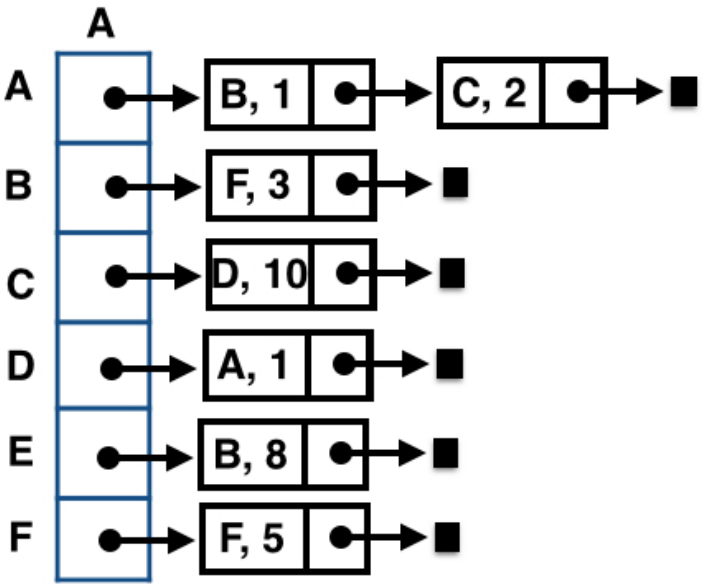

Graph Representation: Adjacency List Example

Weighted Undirected Graph *G*

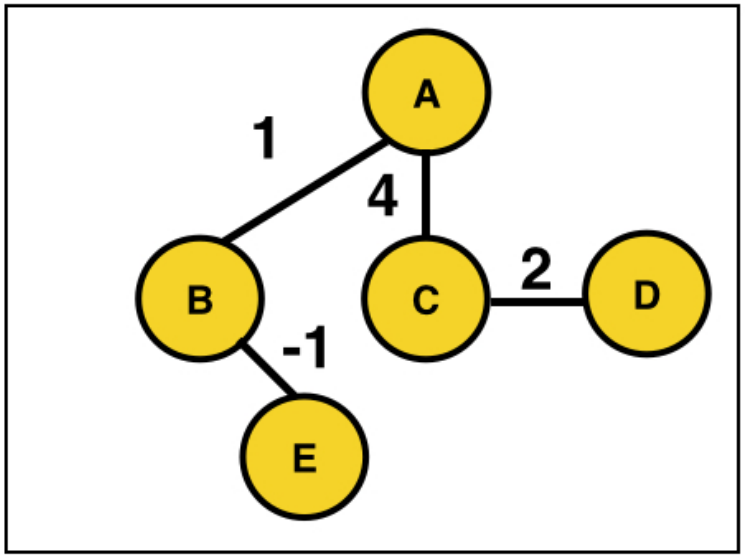

Adjacency List for *G*

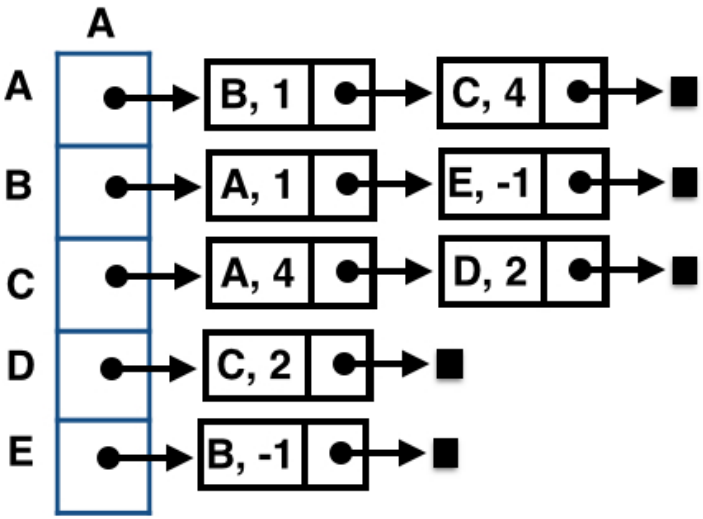

Key Elements of a Graph ADT

- Three main data-types: `Vertex`, `Edge`, `Graph`
- **Adjacency List**: Collection to store the references to edges from each vertex and lists to store the outgoing edges from these edges
- **Adjacency Matrix**: If there are `n` vertices, create an $n \times n$ matrix where each element is of type `Edge`
  - If there is no edge connecting vertices `u` and `v`, set this position as `NULL`

Definition of Interface Functions of Graph ADT

- `numVertices()`: Total number of vertices in the graph
- `vertices()`: Iteration of all the vertices in the graph
- `numEdges()`: Total number of edges in the graph
- `edges()`: Iteration of all the edges in the graph
- `getEdge(u,v)`: Returns the edge connected by vertices `u` and `v`
- `endVertices(e)`: Returns the vertices that form the edge `e`
- `opposite(v,e)`: Returns the other vertex of the edge incident to `v`
- `outDegree(v)`: Returns the number of outgoing edges from `v`
- `inDegree(v)`: Returns the number of incoming edges to `v`
- `outgoingEdges(v)`: Iteration of all the outgoing edges from `v`
- `incomingEdges(v)`: Iteration of all the incoming edges to `v`
- `insertVertex(v)`: Creates a new Vertex `v`
- `insertEdge(u,v,x)`: Creates a new Edge from `u` to `v` and store `x`
- `removeVertex(v)`: Deletes `v` and all the associated edges
- `removeEdge(e)`: Deletes edge `e` from the graph

Table of Contents

1. Introduction
2. Graph Definition
3. Graph Representations
4. Graph Applications
   - Graph Searching
   - Topological Ordering in a Graph
   - Supp: Shortest Paths in a Graph
   - Minimal Spanning Trees
   - Supp: Flow Networks
   - Supp: Four-Colour Problem
   - Supp: Hamiltonian Circuits and Travelling Salesman Problem

Table of Contents

1. Introduction
2. Graph Definition
3. Graph Representations
4. Graph Applications
   - Graph Searching
   - Topological Ordering in a Graph
   - Supp: Shortest Paths in a Graph
   - Minimal Spanning Trees
   - Supp: Flow Networks
   - Supp: Four-Colour Problem
   - Supp: Hamiltonian Circuits and Travelling Salesman Problem

Graph Traversal

- In order to perform a search on a graph G, it is necessary to **traverse** every node in the graph
- A graph search will begin from a **starting** vertex v
- All nodes in the graph can be traversed from v only if all other vertices are **accessible** from v
- Suppose that all nodes are accessible from v, can we employ in-order, pre-order or post-order traversals as we did in trees?
- Need to take care of **cycles** to prevent from being stuck in it infinitely by **marking** nodes already visited
- Two types of graph traversals: **breadth-first** and **depth-first**

Graph Traversal

- **Breadth-first** traversal is similar to level-order traversal as all siblings are visited first before visiting the descendants
- Can use **queues** for implementing breadth first traversal
- **Depth-first** traversal visits descendants first and then visits siblings
- Can use **stacks** for implementing depth first traversal

Breadth-First Traversal

Graph Traversal: Breadth-first

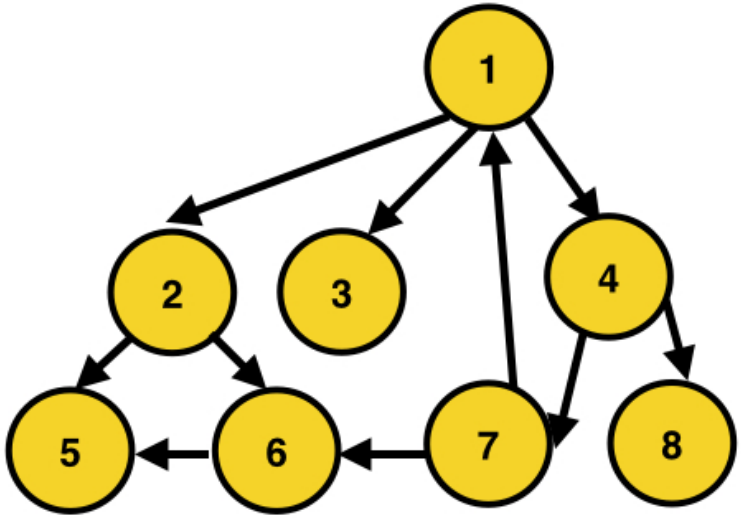

Breadth-First Traversal: 1 2 3 4 5 6 7 8

Can perform breadth-first traversal by using
a queue and marking nodes that are visited

Graph Traversal: Breadth-first

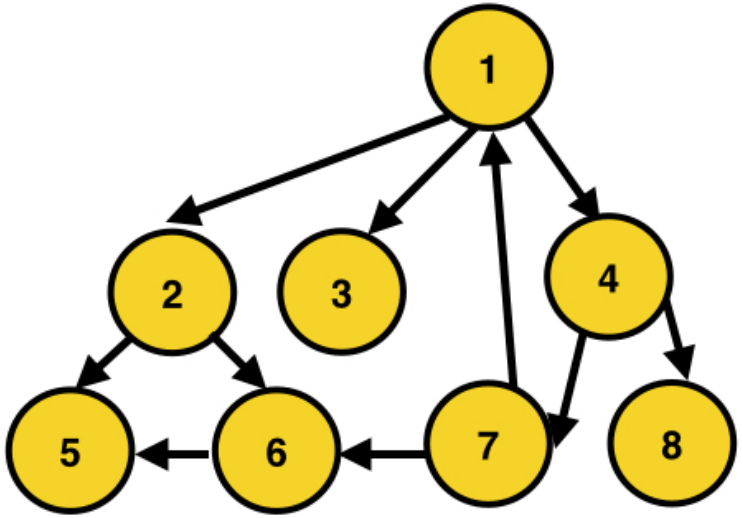

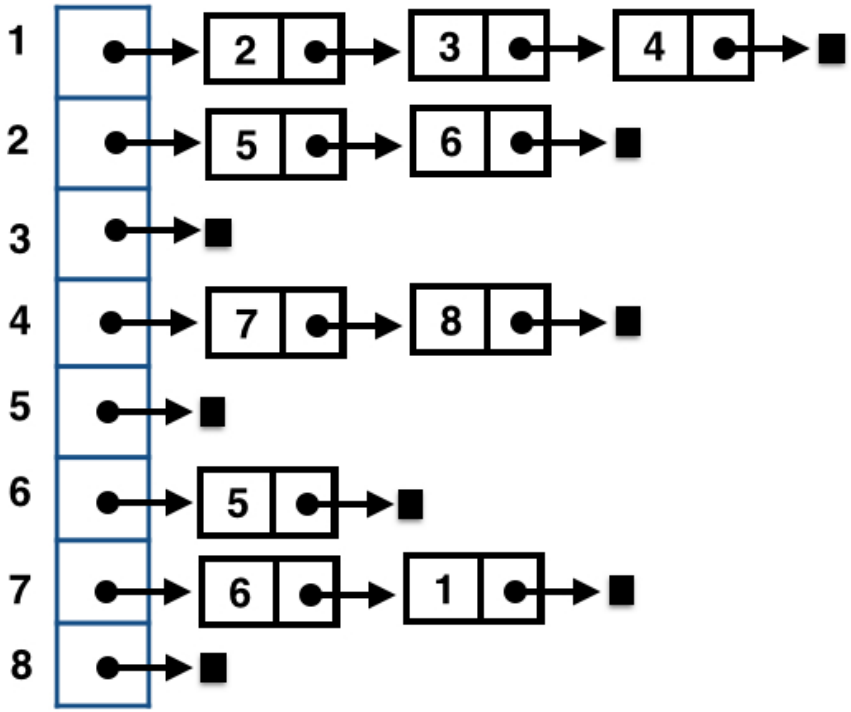

Enqueue the starting node into the queue Q

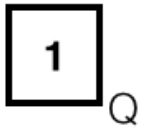

Graph Traversal: Breadth-first

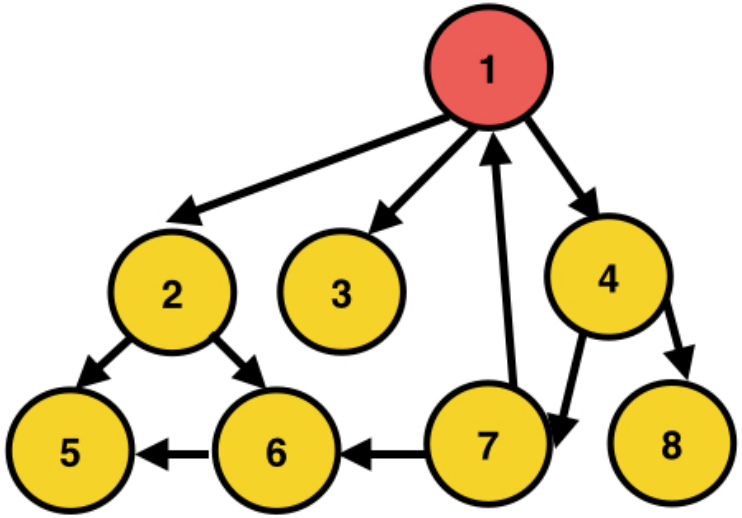

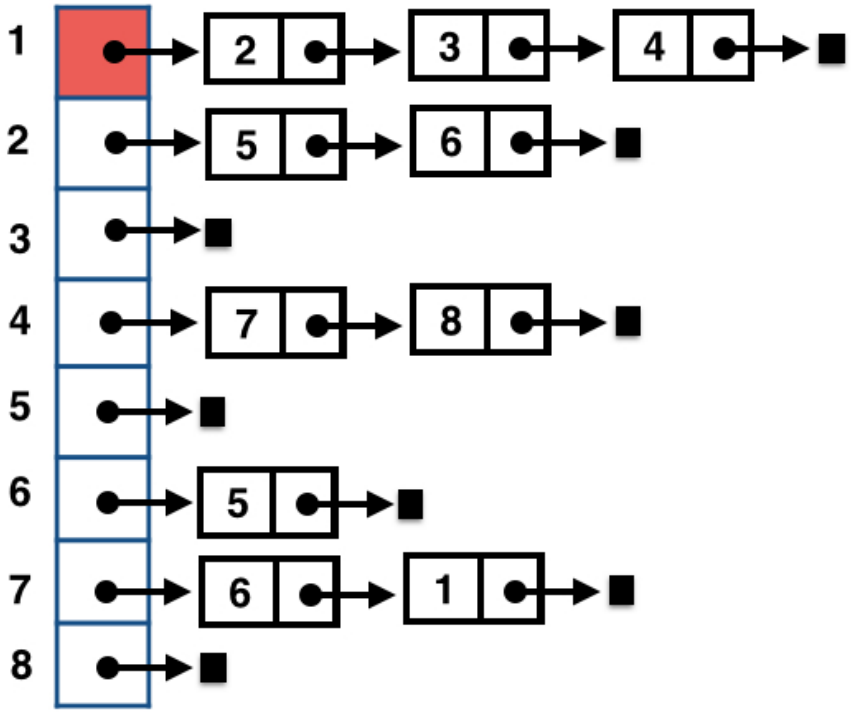

Dequeue a node from queue Q, insert into the snapshot list,
mark the node as visited and enqueue the dequeued node's adjacent nodes into Q

Snapshot: 1

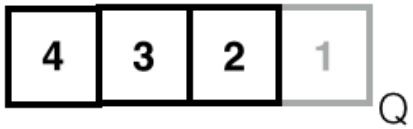

Graph Traversal: Breadth-first

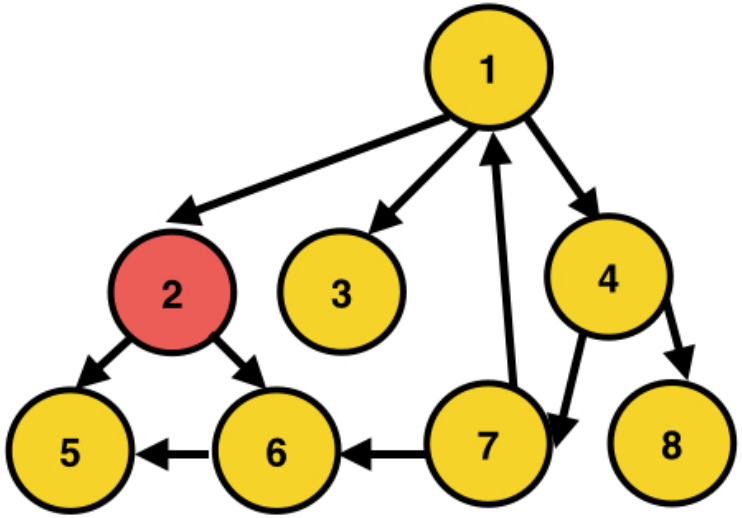

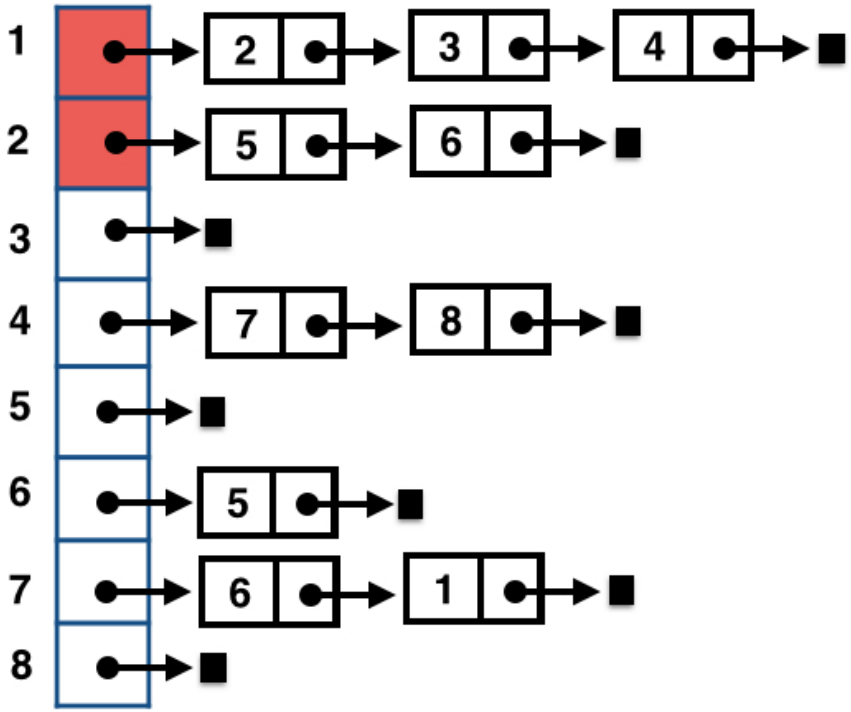

Dequeue a node from queue Q, insert into the snapshot list, mark the node as visited and enqueue the dequeued node's adjacent nodes into Q

Snapshot: 1 2

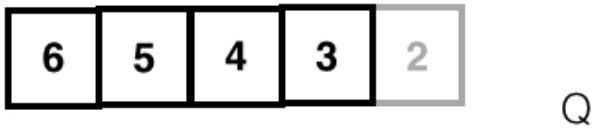

Graph Traversal: Breadth-first

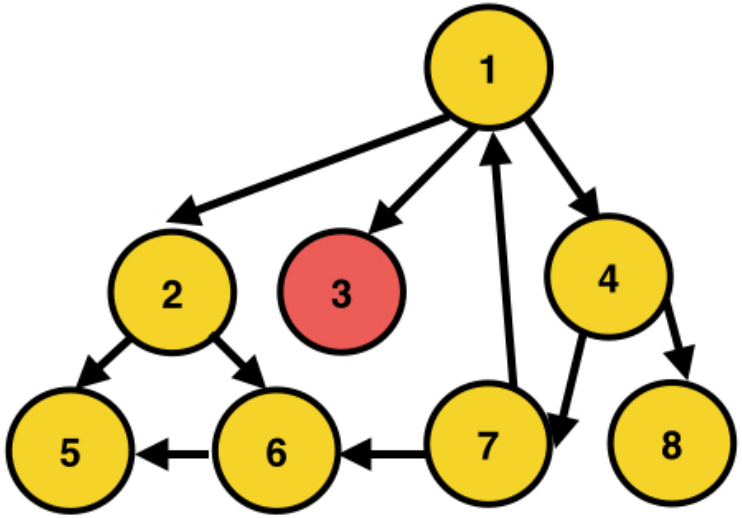

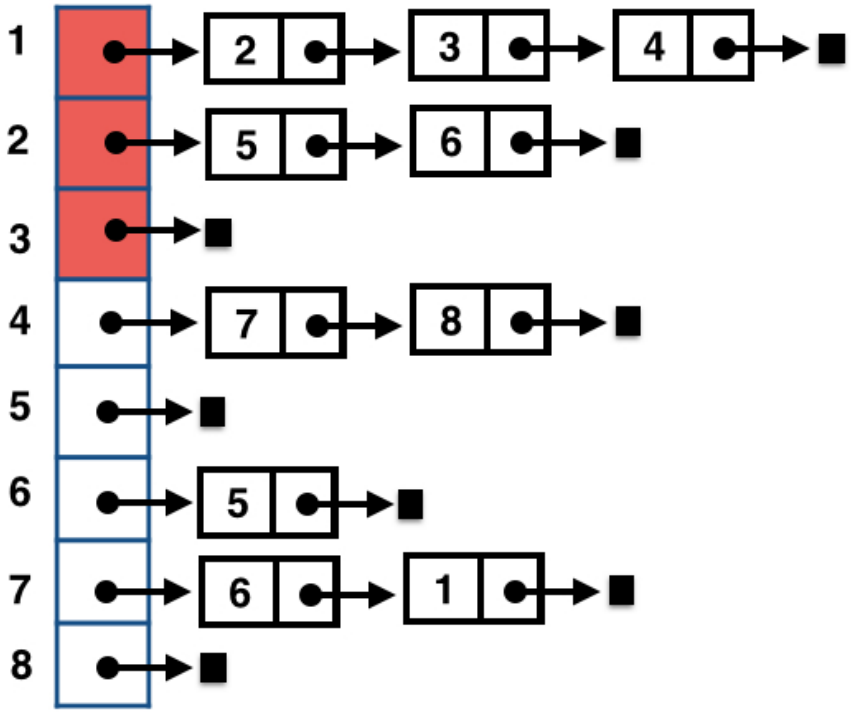

Dequeue a node from queue Q, insert into the snapshot list,
mark the node as visited and enqueue the dequeued node's adjacent nodes into Q

Snapshot: 1 2 3

Graph Traversal: Breadth-first

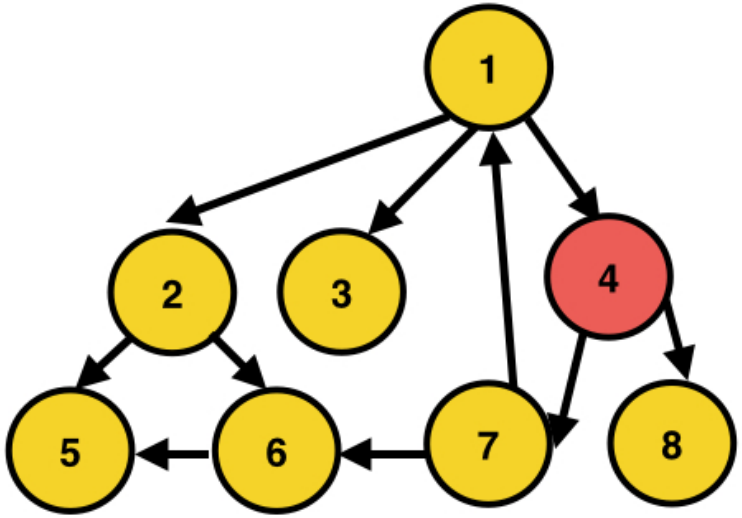

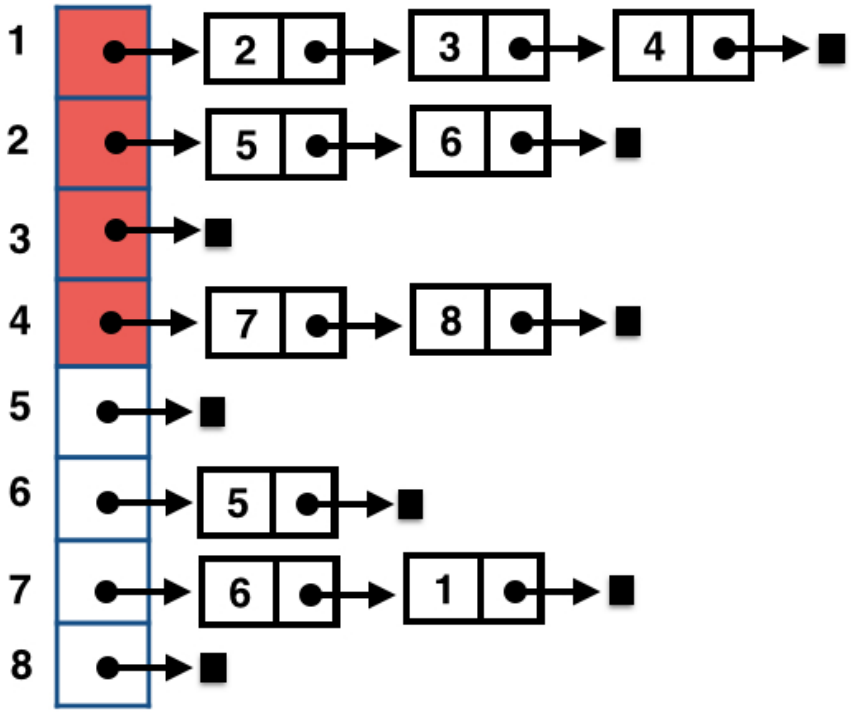

Dequeue a node from queue Q, insert into the snapshot list,
mark the node as visited and enqueue the dequeued node's adjacent nodes into Q

Snapshot: 1 2 3 4

Graph Traversal: Breadth-first

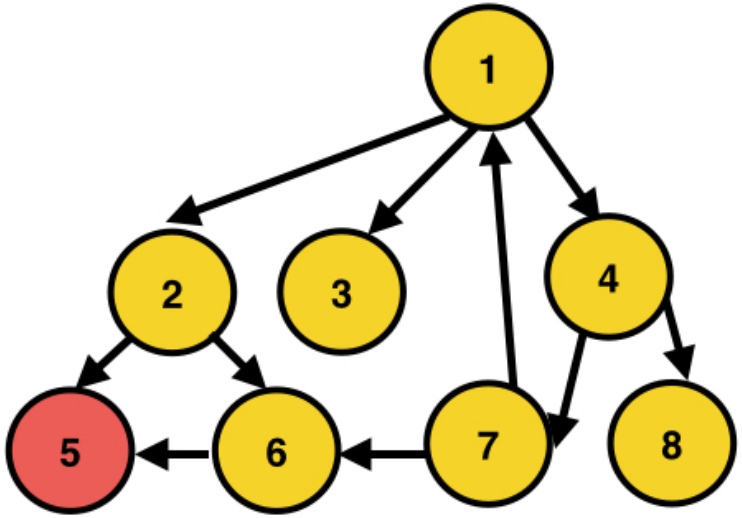

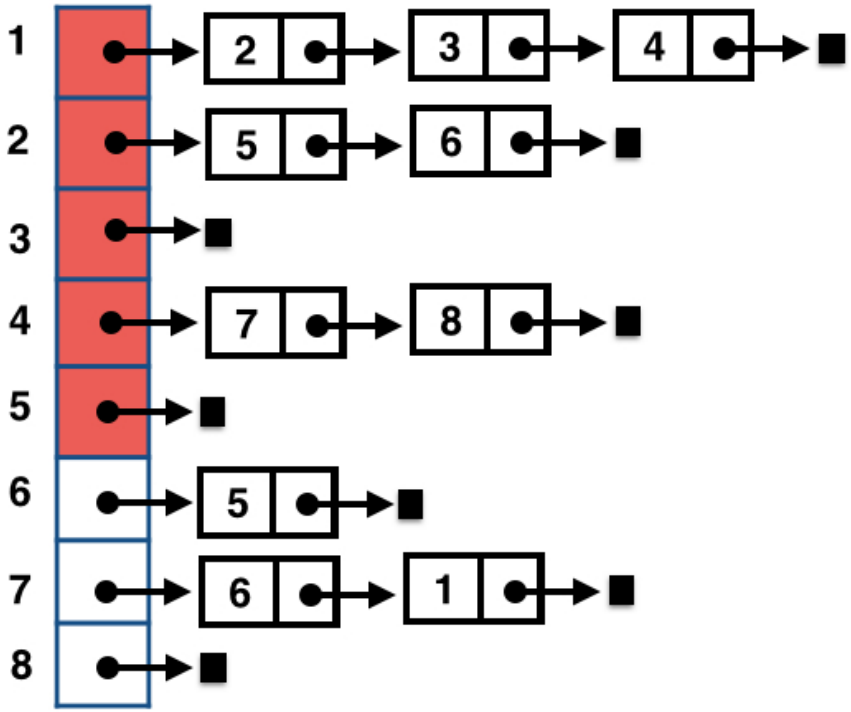

Dequeue a node from queue Q, insert into the snapshot list,
mark the node as visited and enqueue the dequeued node's adjacent nodes into Q

Snapshot: 1 2 3 4 5

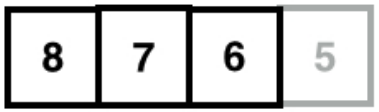

Q

Graph Traversal: Breadth-first

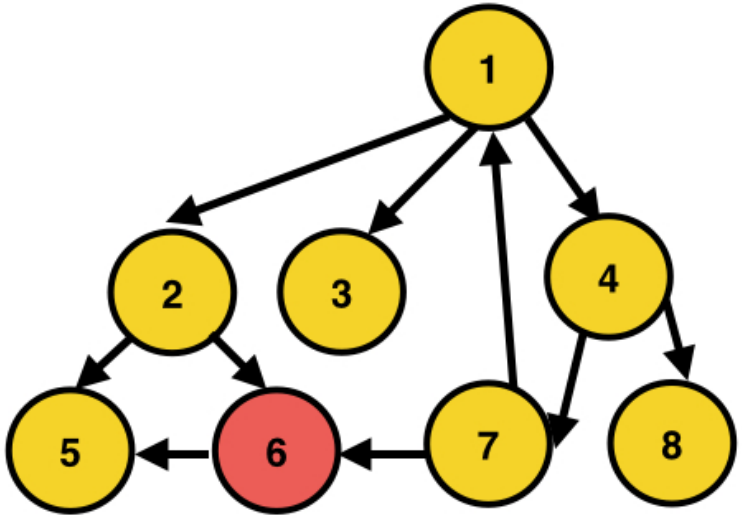

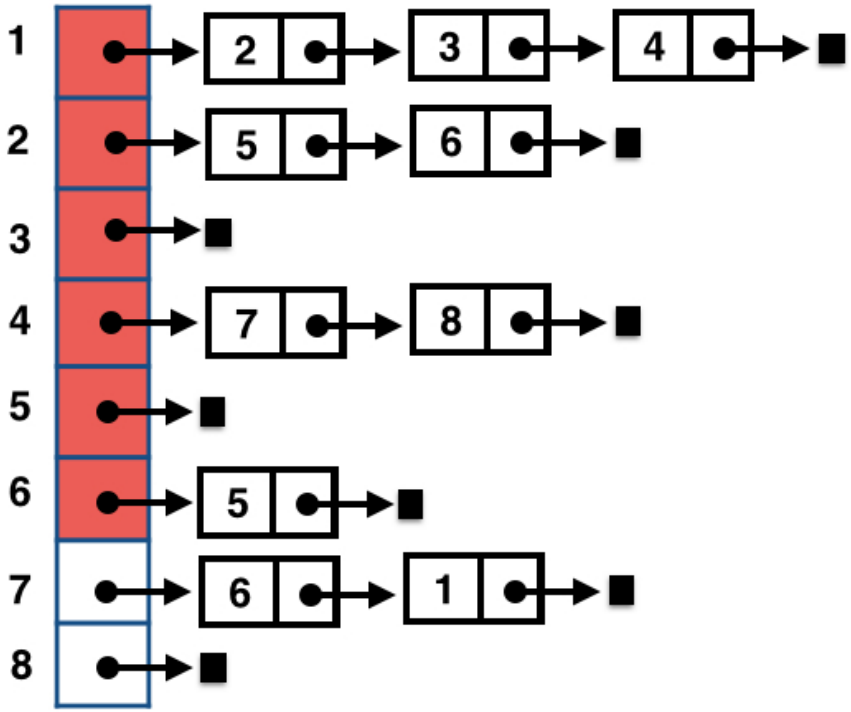

Dequeue a node from queue Q, insert into the snapshot list,
mark the node as visited and enqueue the dequeued node's adjacent nodes into Q

Snapshot: 1 2 3 4 5 6

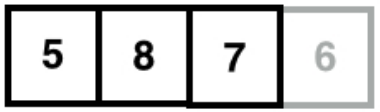

Q

Graph Traversal: Breadth-first

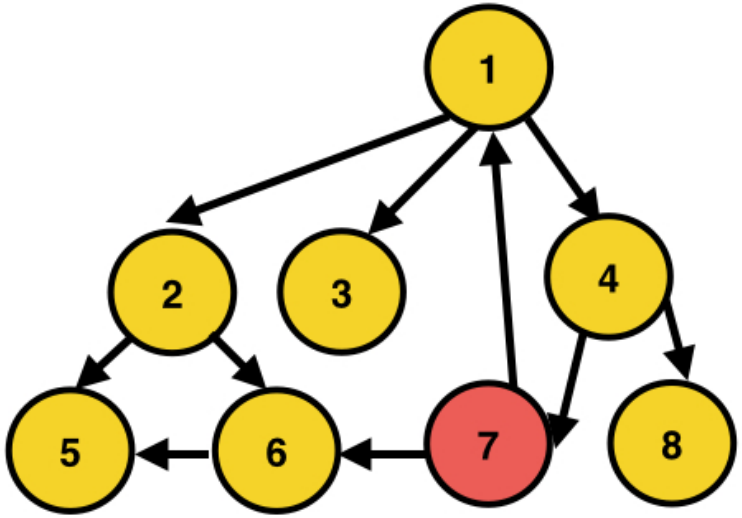

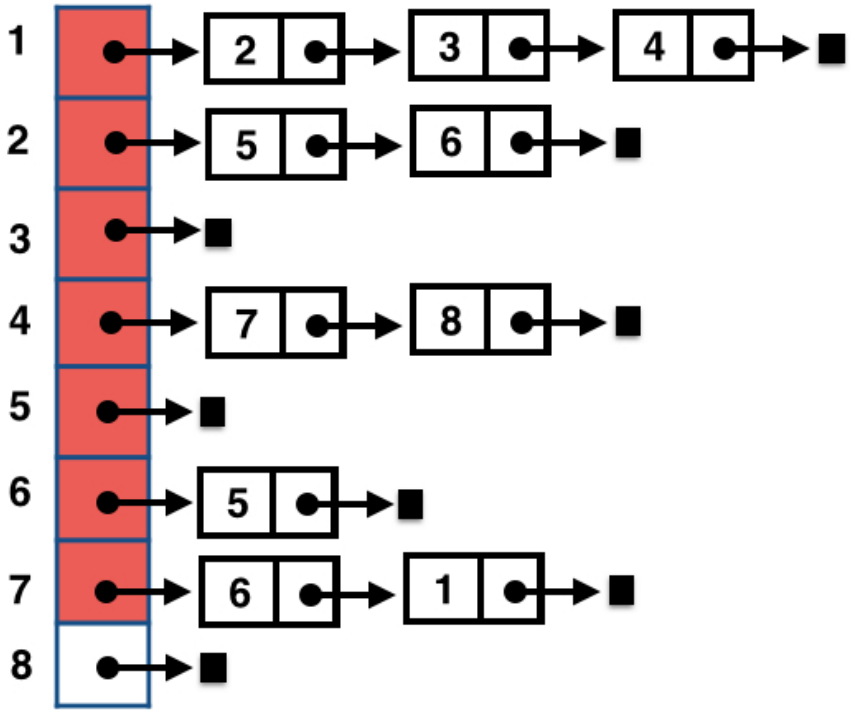

Dequeue a node from queue Q, insert into the snapshot list,
mark the node as visited and enqueue the dequeued node's adjacent nodes into Q

Snapshot: 1 2 3 4 5 6 7

Q

Graph Traversal: Breadth-first

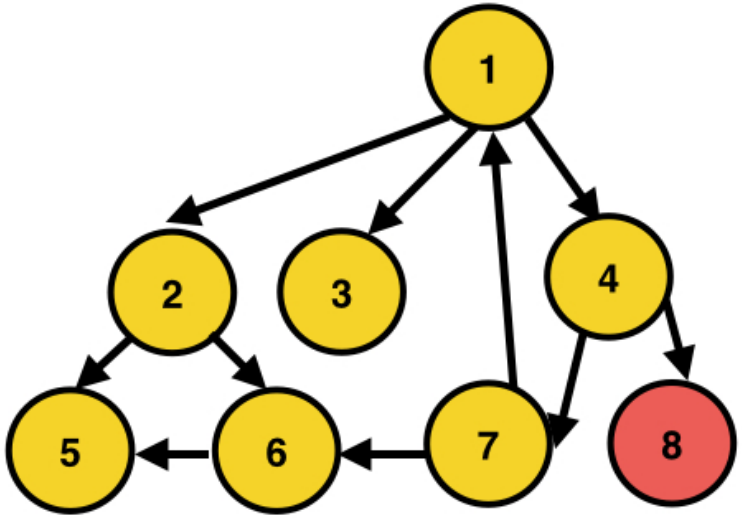

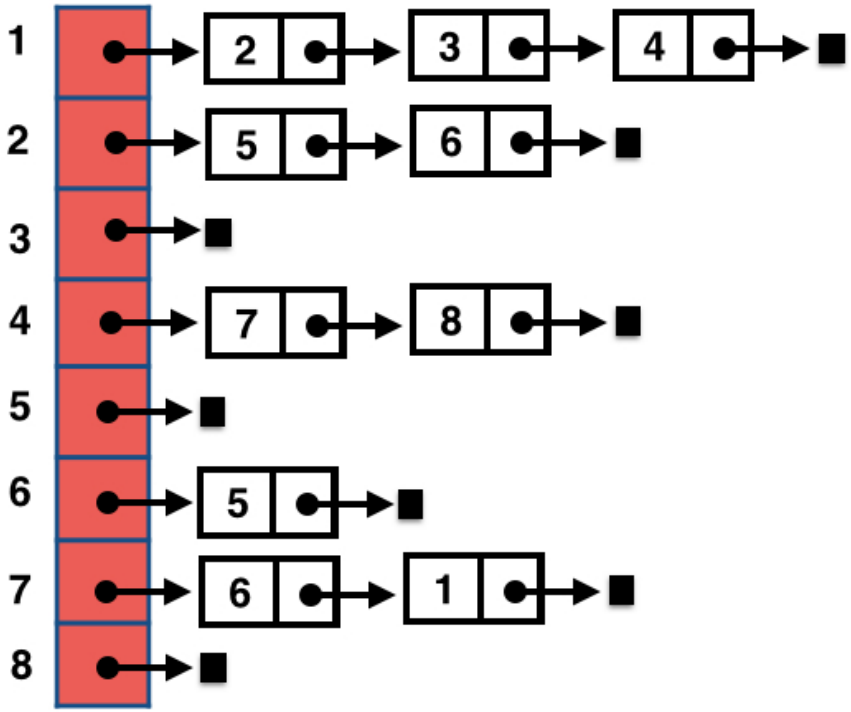

Dequeue a node from queue Q, insert into the snapshot list,
mark the node as visited and enqueue the dequeued node's adjacent nodes into Q

All remaining nodes in the queue have been visited already!

Snapshot: 1 2 3 4 5 6 7 8

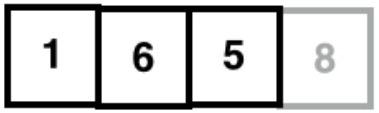

Q

Graph Traversal: Breadth-first

```
public Iterable<Vertex<V>> breadthFirstTraversal(Vertex<V> u)
{
  List<Vertex<V>> snapshot = new ArrayList<Vertex<V>>();
  LinkedListQueue<Vertex<V>> llQ = new LinkedListQueue();
  llQ.enqueue(u);
  int[] visitedList = new int[numVertices()];
  for (int i=0; i<numVertices(); i++) {
      visitedList[i]=0;
  }
  Vertex<V> v;
  while(!isEmpty(llQ)){
      v = dequeue(llQ);
      if (visitedList[v.getLabel()]==0){
          snapshot.add(v);
          visitedList[v.getLabel()]=1;
          for(Edge<E> e : outgoingEdges(v)){
            if(visitedList[v.getLabel()]==0)
              llQ.enqueue(opposite(v,e));
            }
          }
  }
  return snapshot;
}
```

Depth-First Traversal

Graph Traversal: Depth-first

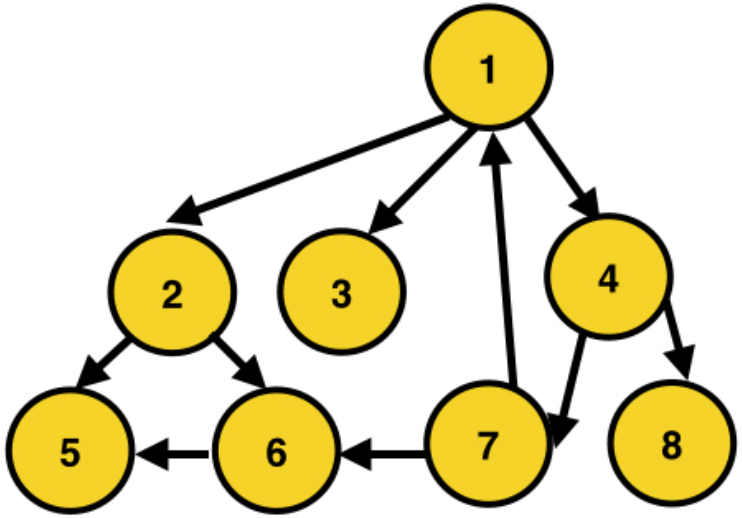

Depth-First Traversal: 1 2 5 6 3 4 7 8

Can perform depth-first traversal by using
two stacks and marking nodes that are visited

Graph Traversal: Depth-first

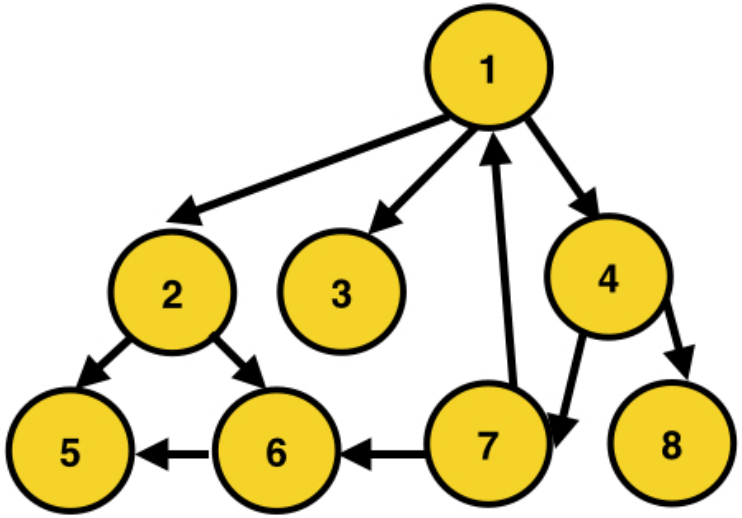

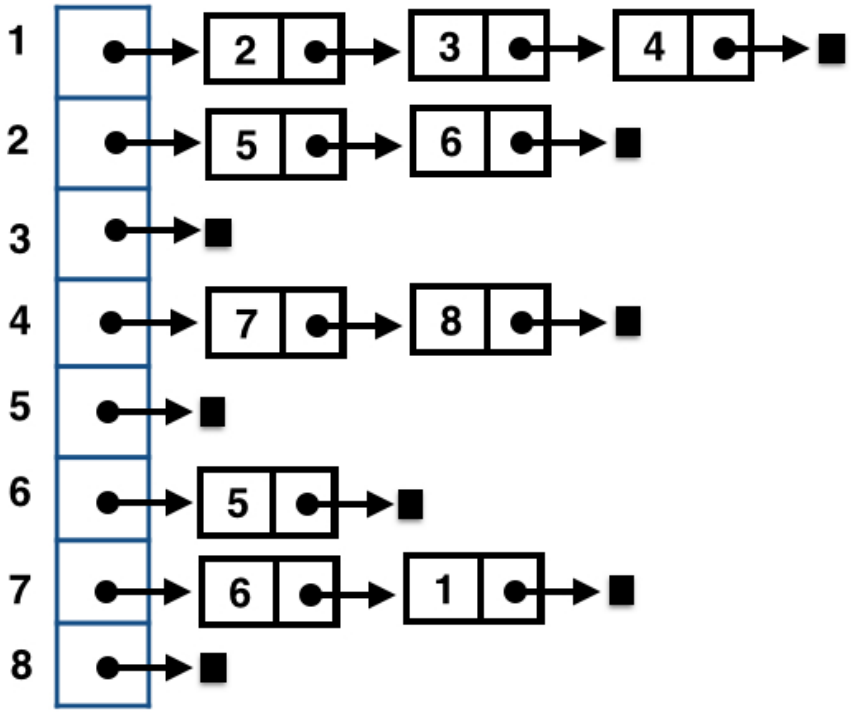

Graph Traversal: Depth-first

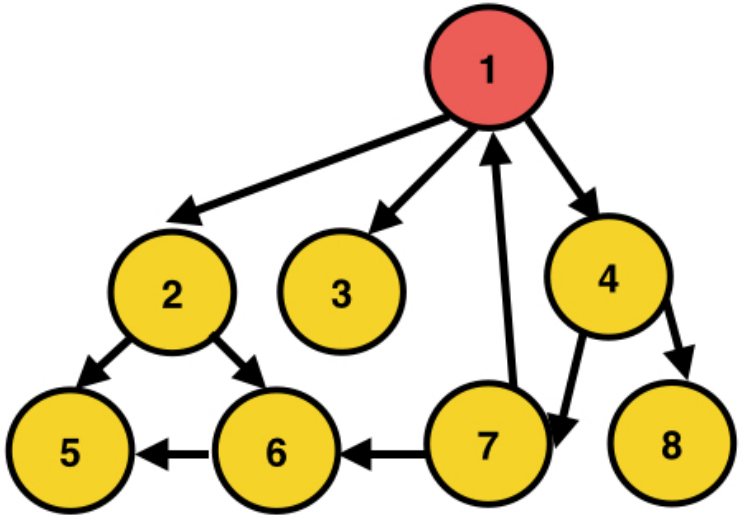

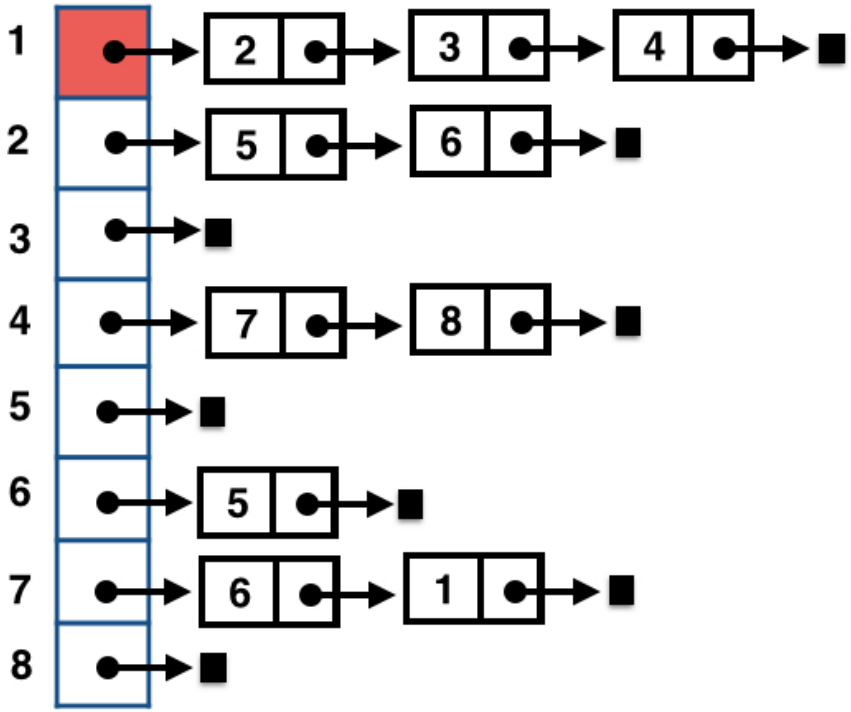

Mark nodes as these are visited. Push the starting node into S

Graph Traversal: Depth-first

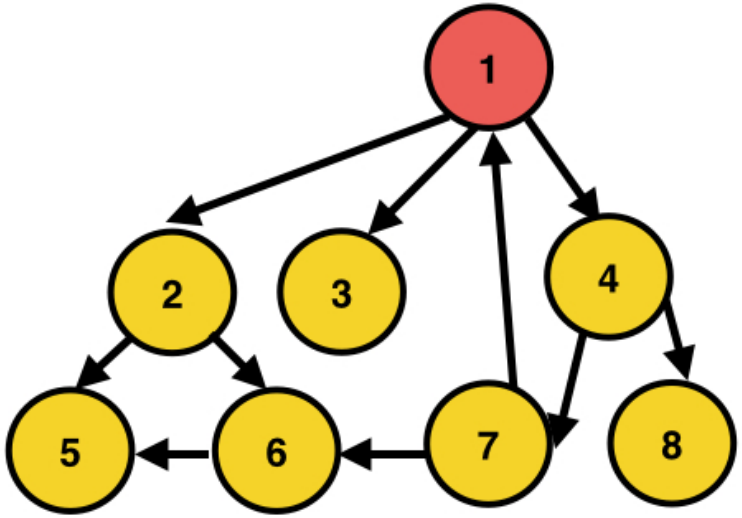

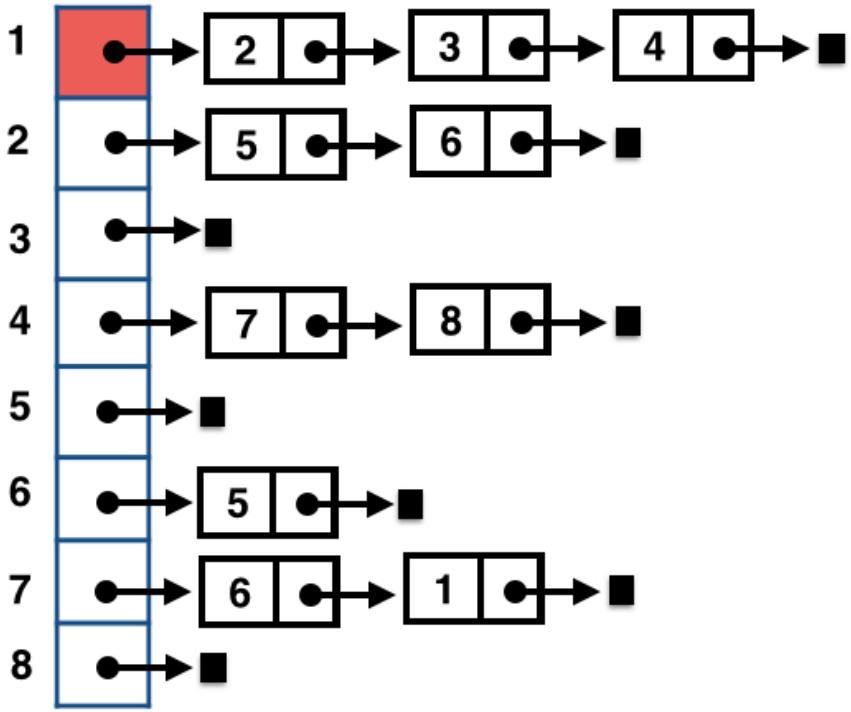

Pop a node from the stack s. Insert node into snapshot list. Push all the nodes adjacent to the popped node into stack sT.

Snapshot: 1

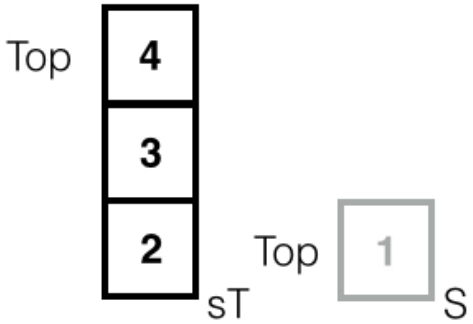

Graph Traversal: Depth-first

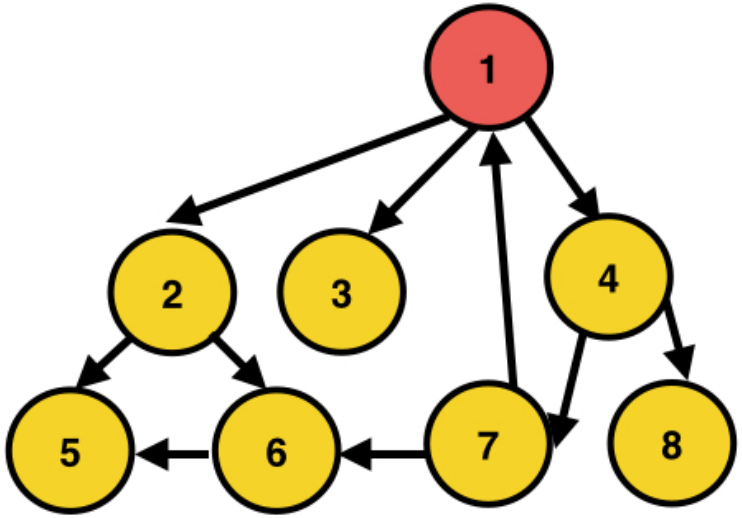

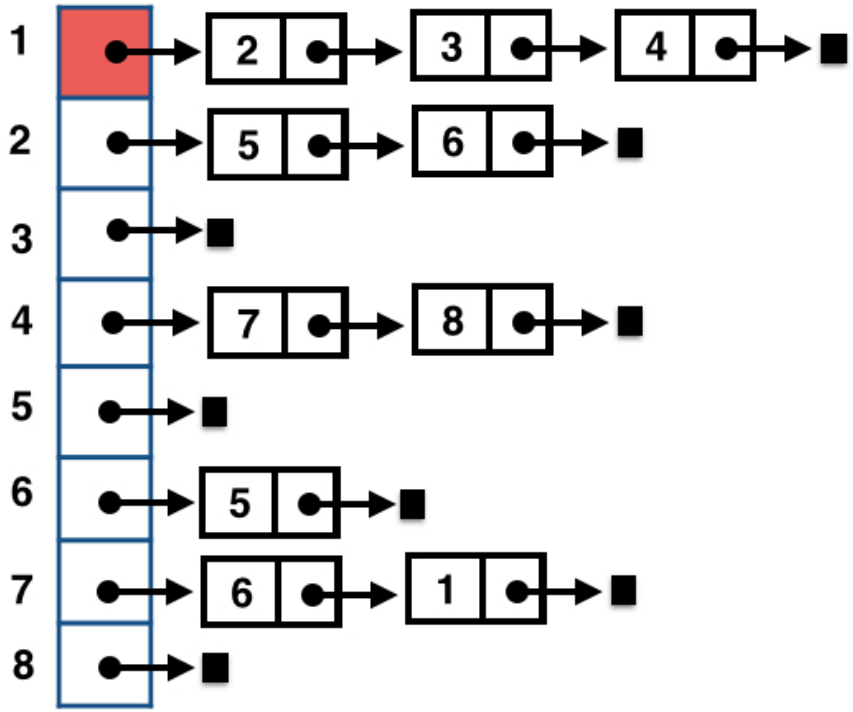

Push all nodes in sT into S

Snapshot: 1

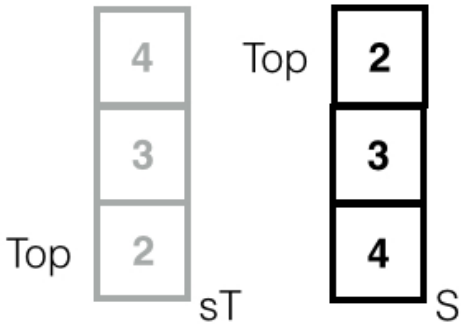

Graph Traversal: Depth-first

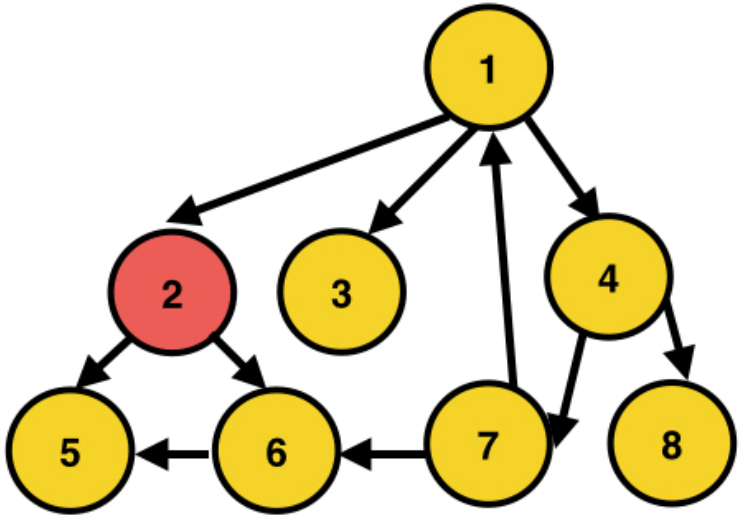

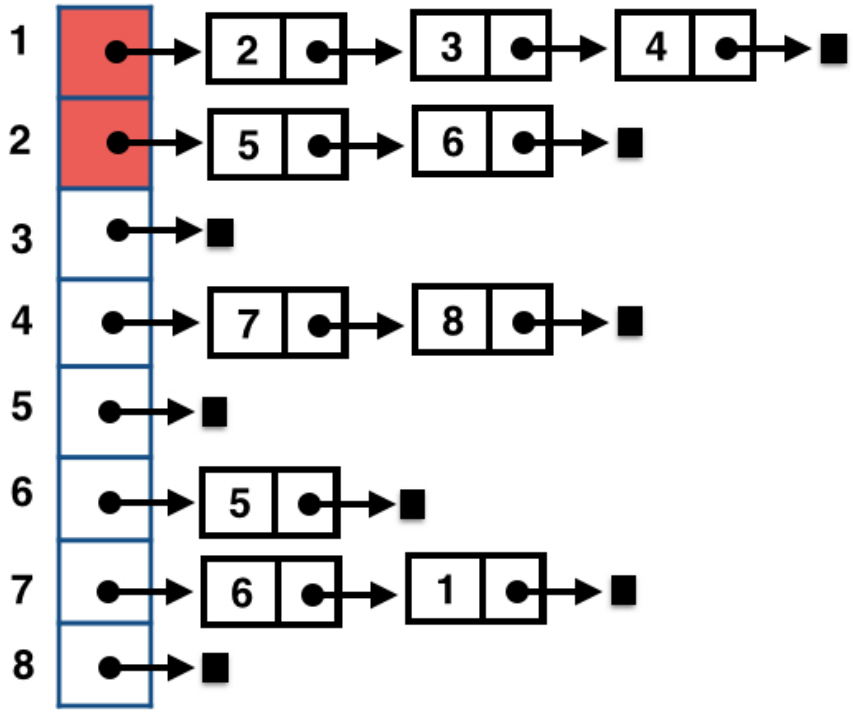

Pop a node from S. Insert node into snapshot list, push all adjacent nodes to the popped node into sT and mark the popped node as visited

Snapshot: 1 2

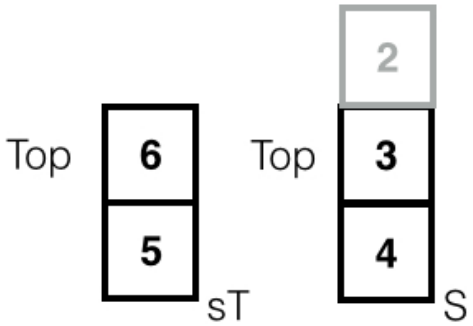

Graph Traversal: Depth-first

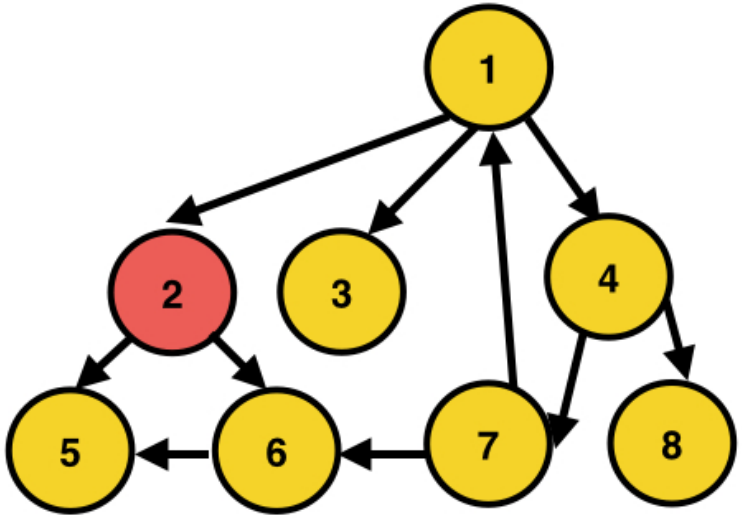

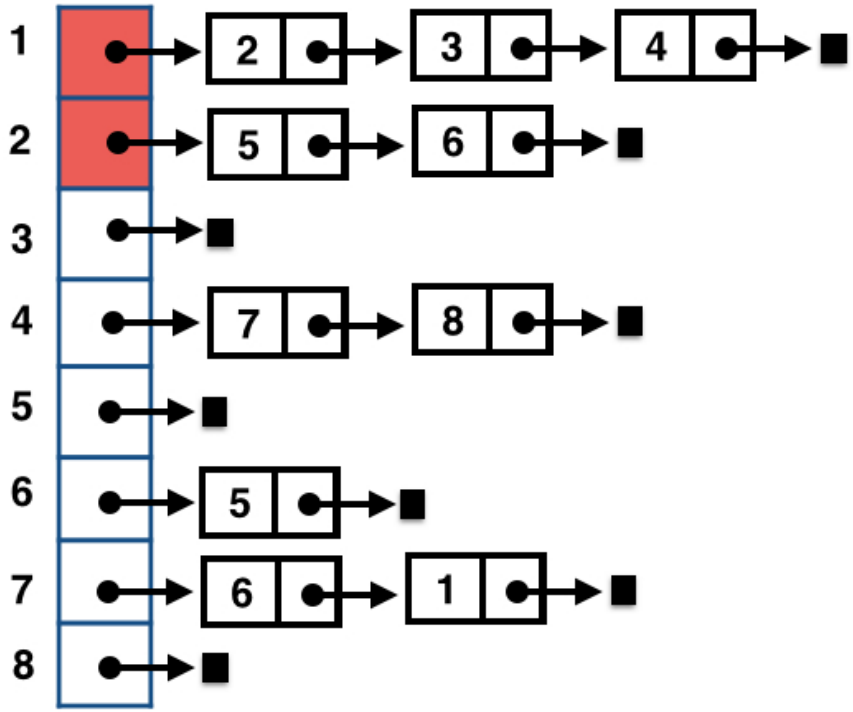

Push all the elements in sT into S

Snapshot: 1 2

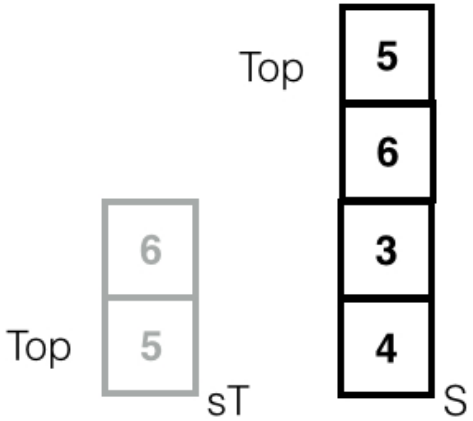

Graph Traversal: Depth-first

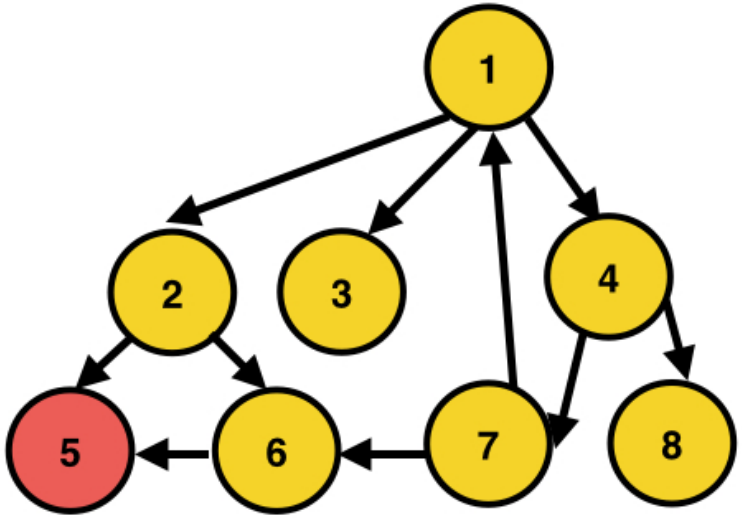

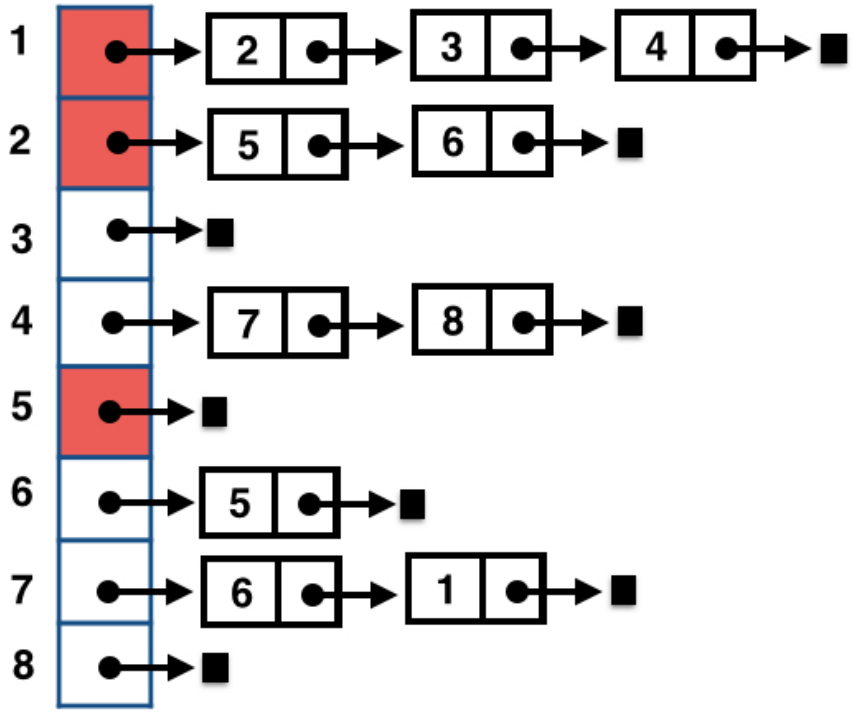

Pop a node from S, Insert node into snapshot list.
Mark the popped node as visited

Cannot push all adjacent nodes to the popped node into sT as node 5 has no adjacency list

Snapshot: 1 2 5

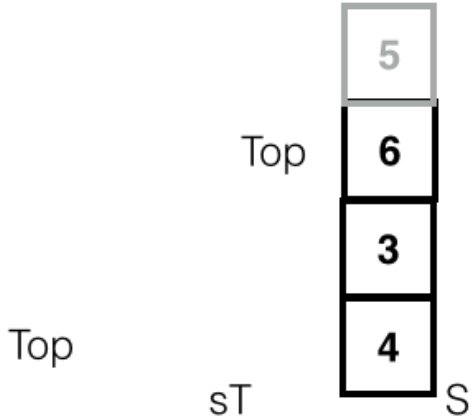

Graph Traversal: Depth-first

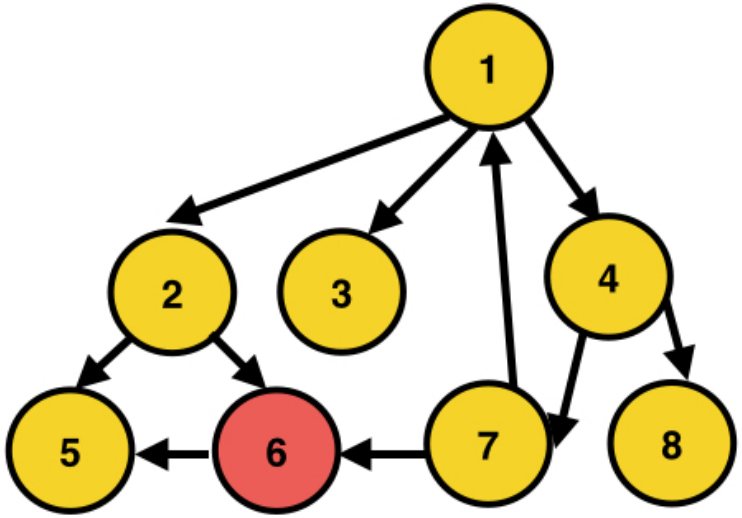

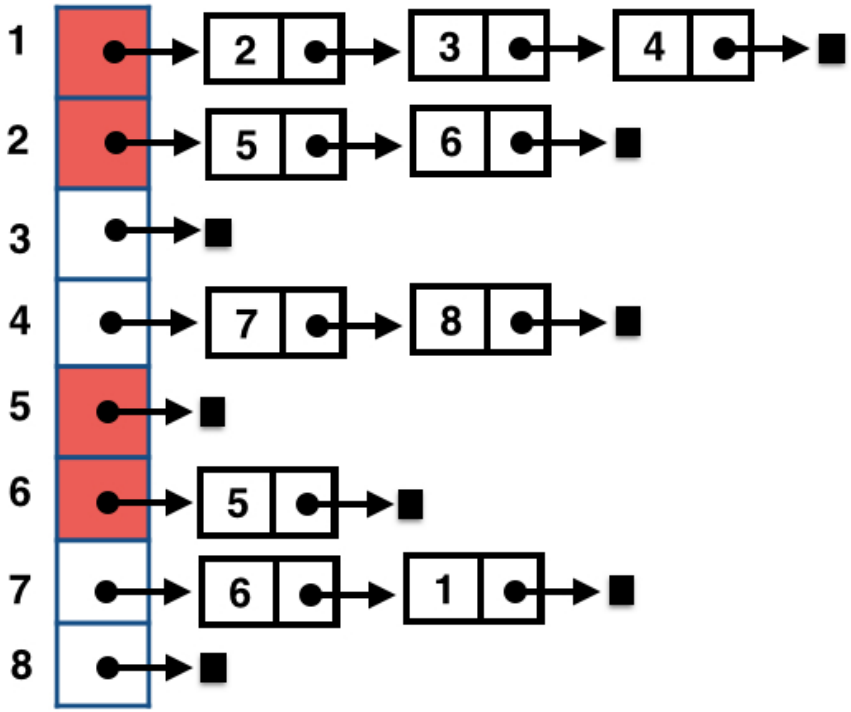

Pop a node from S. Insert node into snapshot list. Mark the popped node as visited. Push all adjacent nodes to the popped node into sT.

Snapshot: 1 2 5 6

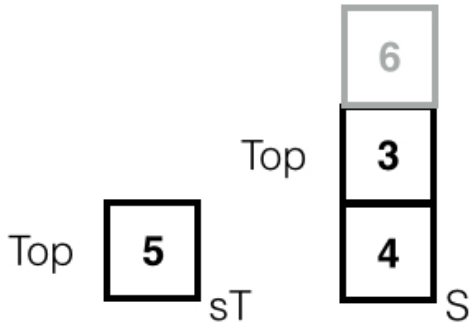

Graph Traversal: Depth-first

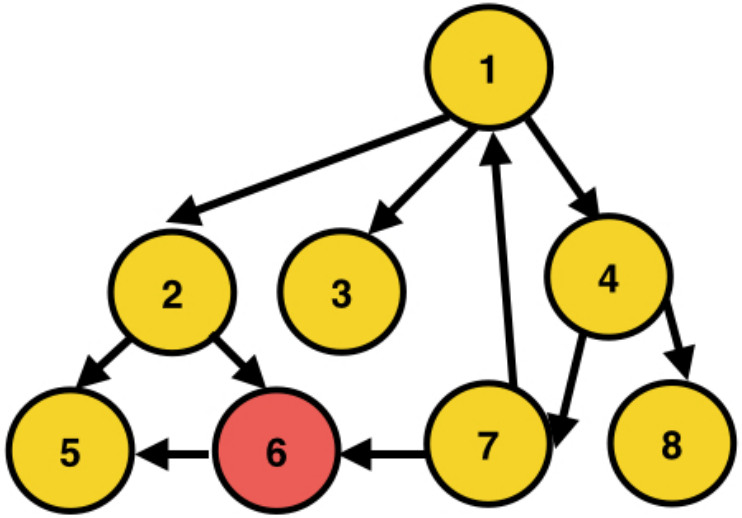

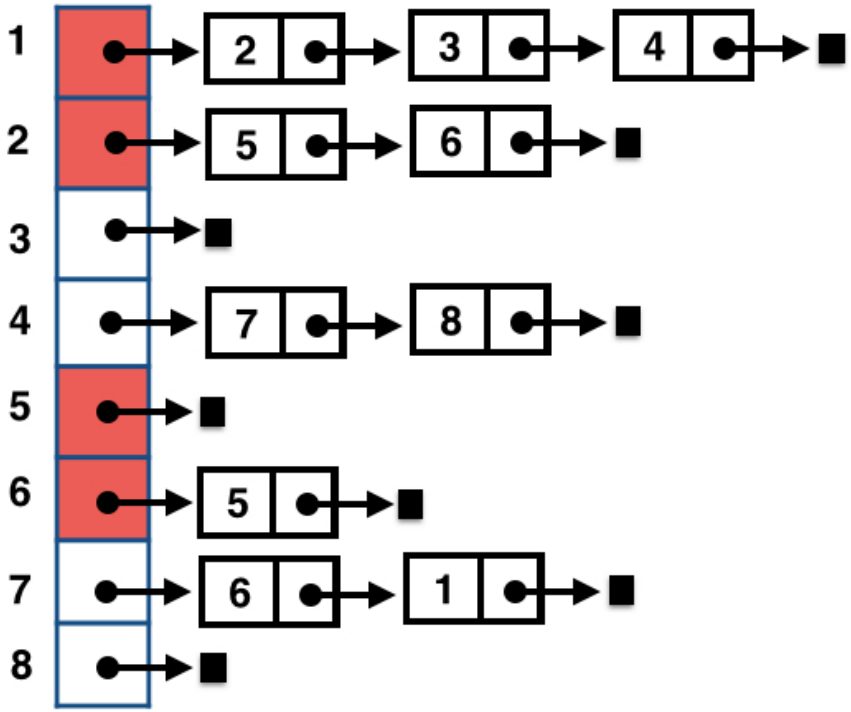

Push all the elements in sT into S

Snapshot: 1 2 5 6

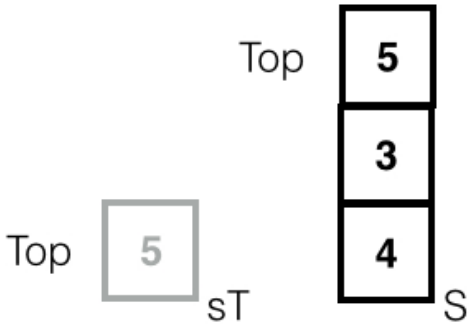

Graph Traversal: Depth-first

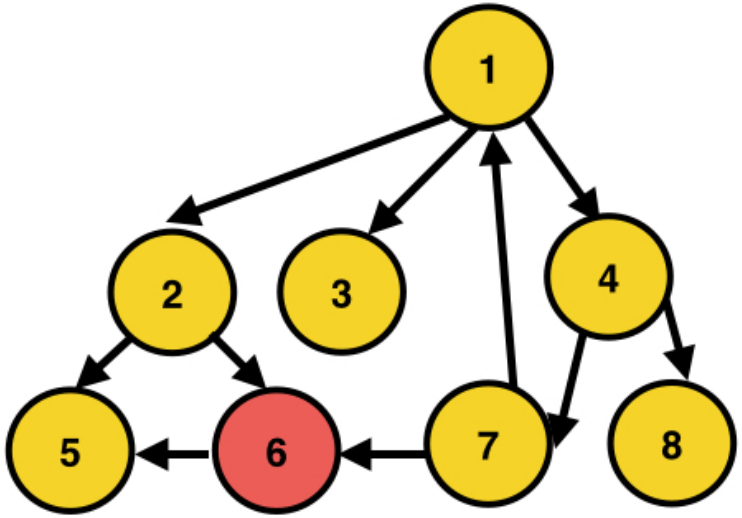

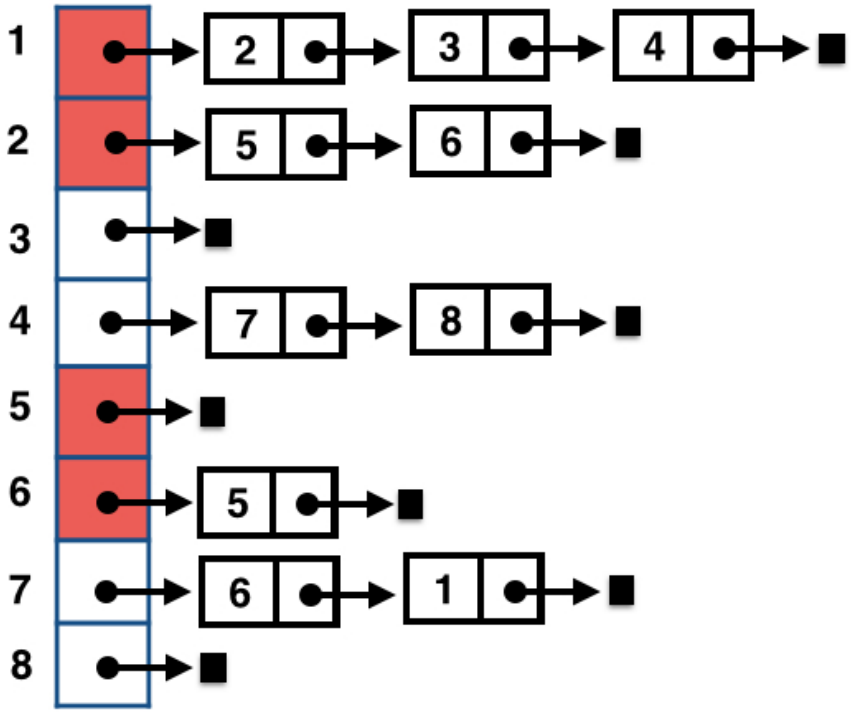

Pop node from S. Since node 5 is already visited, it is not printed

Snapshot: 1 2 5 6

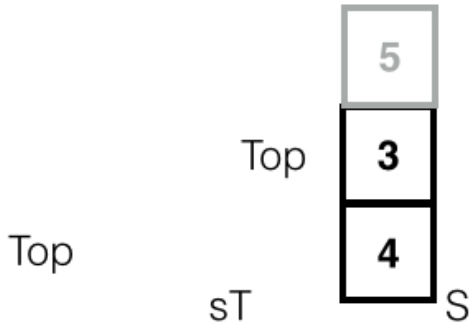

Graph Traversal: Depth-first

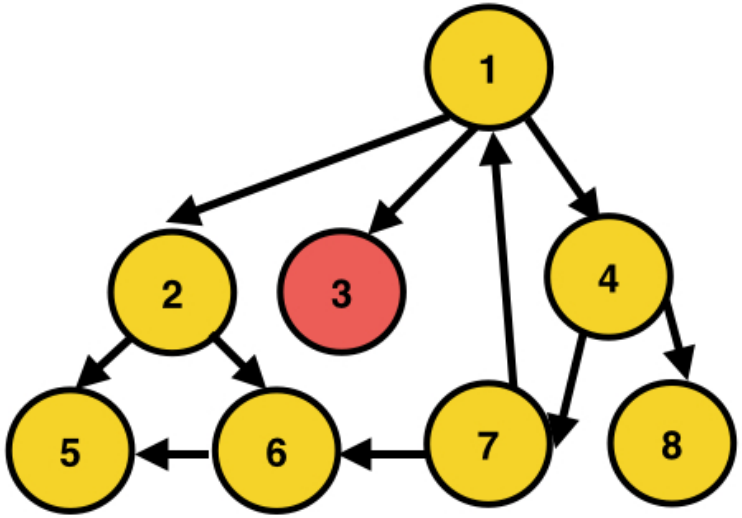

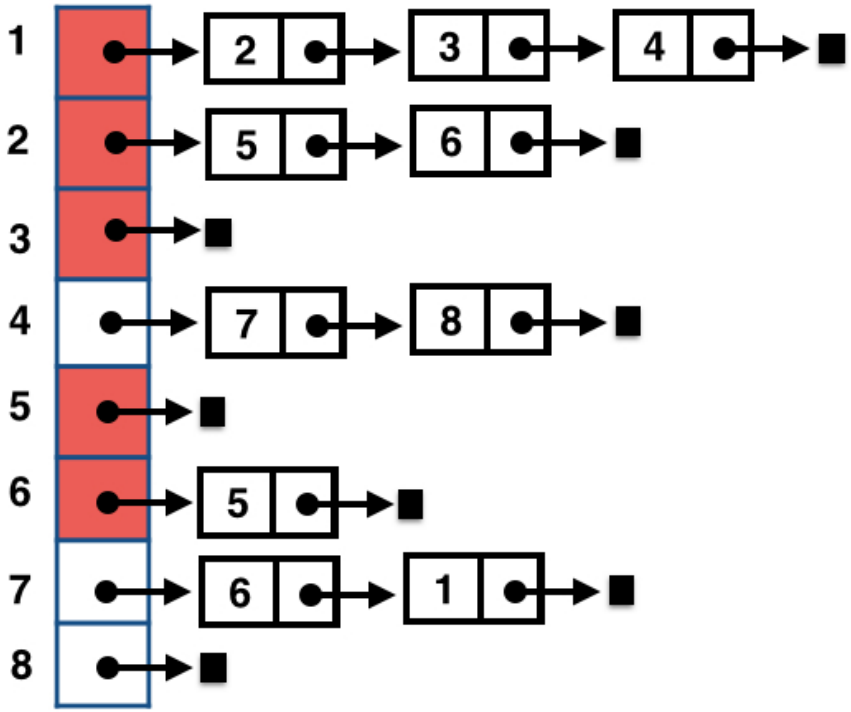

Pop a node from S. Insert node into snapshot list.
Mark the popped node as visited

Cannot push all adjacent nodes to the popped node into sT as node 3 has no adjacency list

Snapshot: 1 2 5 6 3

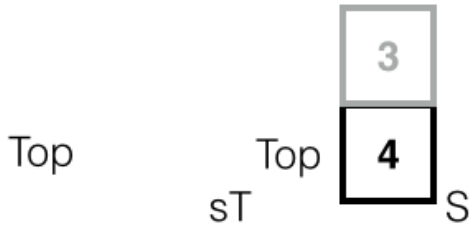

Graph Traversal: Depth-first

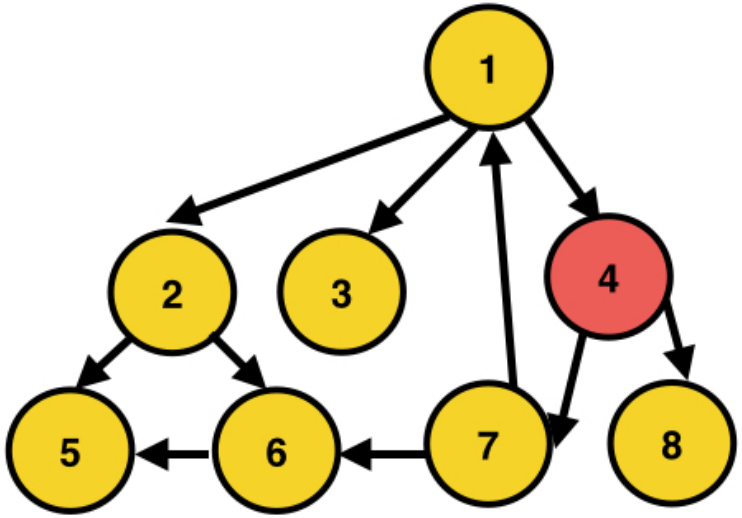

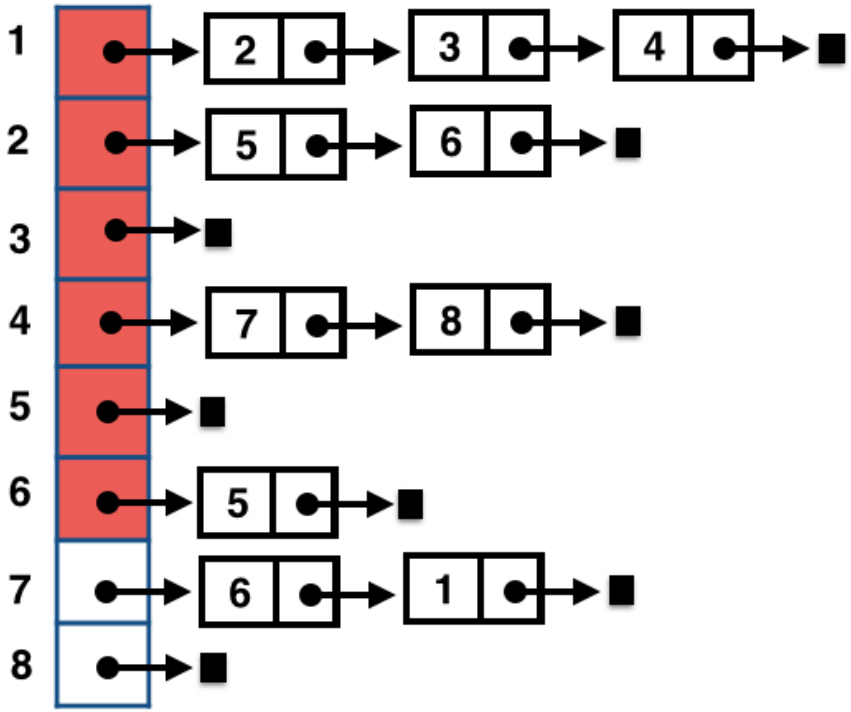

Pop a node from S. Insert node into snapshot list.
Push all adjacent nodes to the popped node into sT
and mark the popped node as visited

Snapshot: 1 2 5 6 3 4

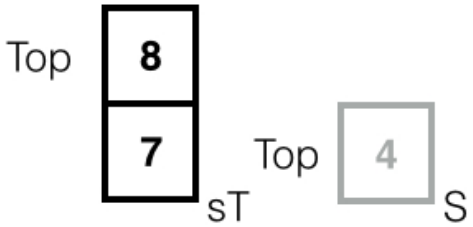

Graph Traversal: Depth-first

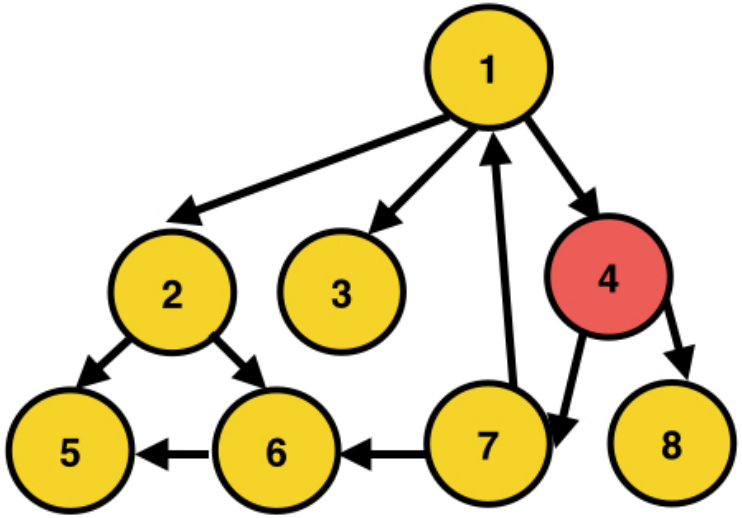

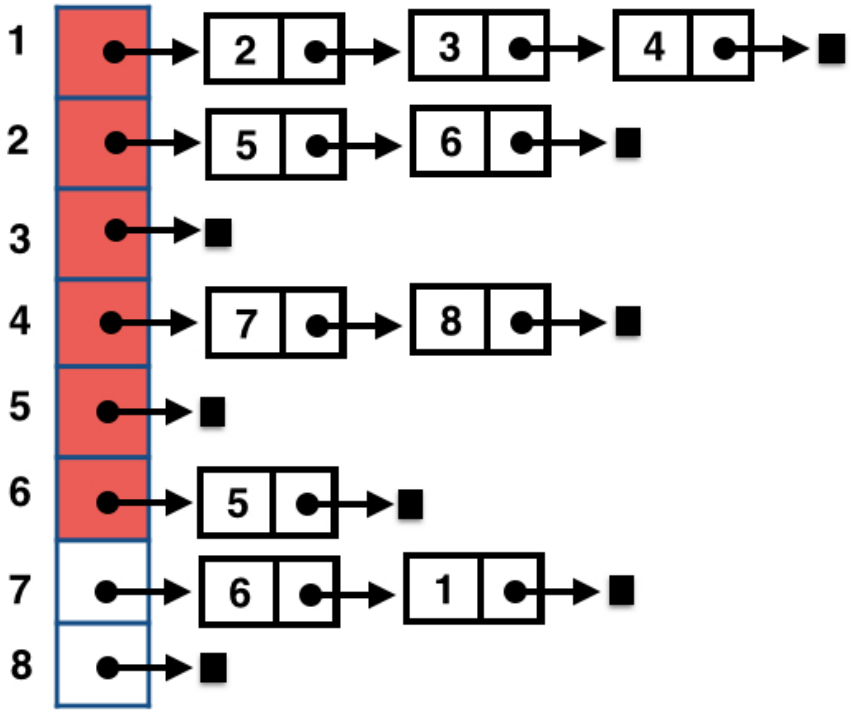

Push all elements in sT into S

Console: 1 2 5 6 3 4

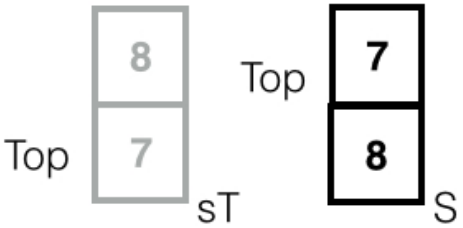

Graph Traversal: Depth-first

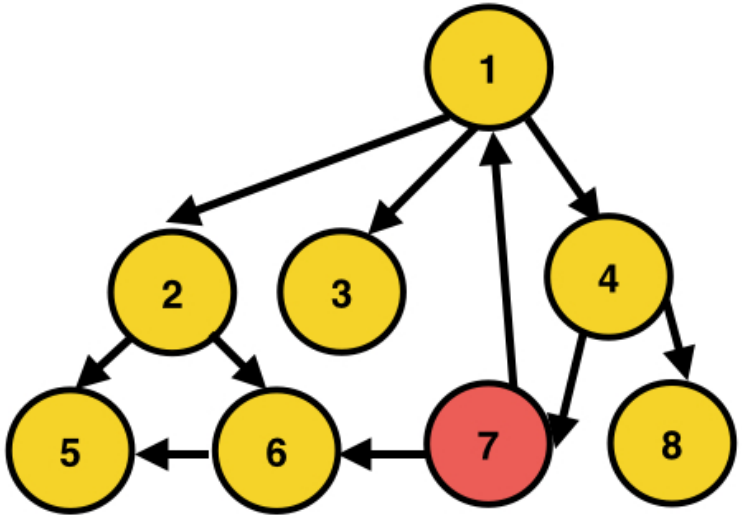

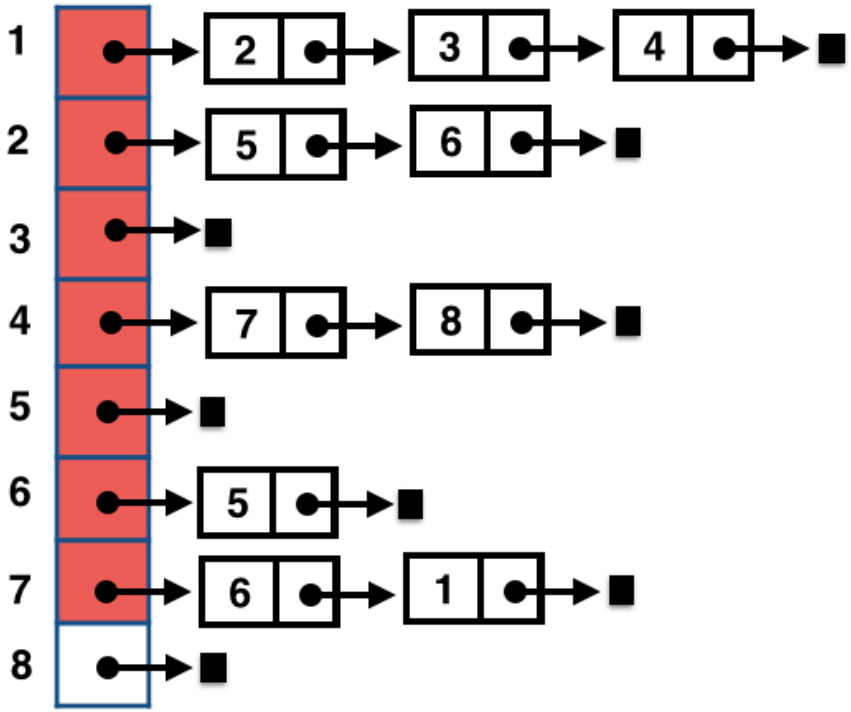

Pop a node from S. Insert node into snapshot list. Mark the popped node as visited. Push all adjacent nodes to the popped node into sT.

Snapshot: 1 2 5 6 3 4 7

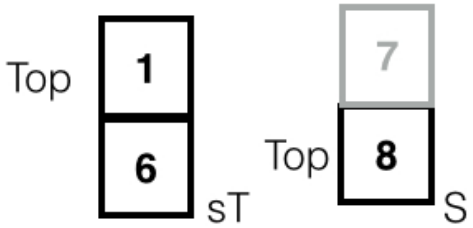

Graph Traversal: Depth-first

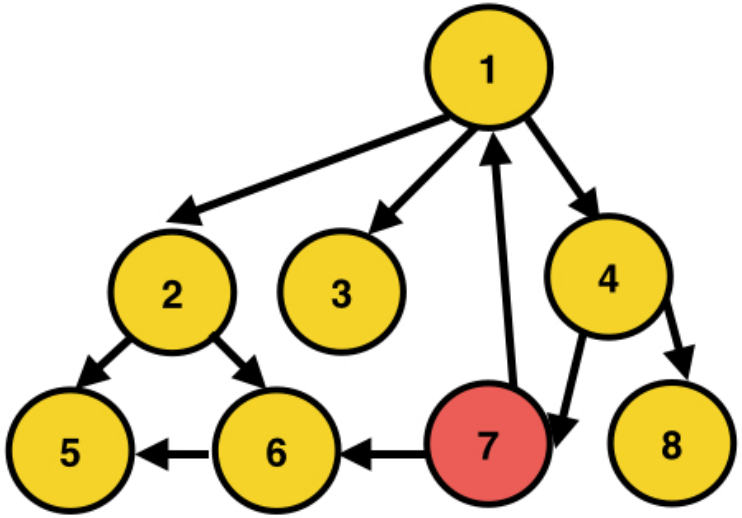

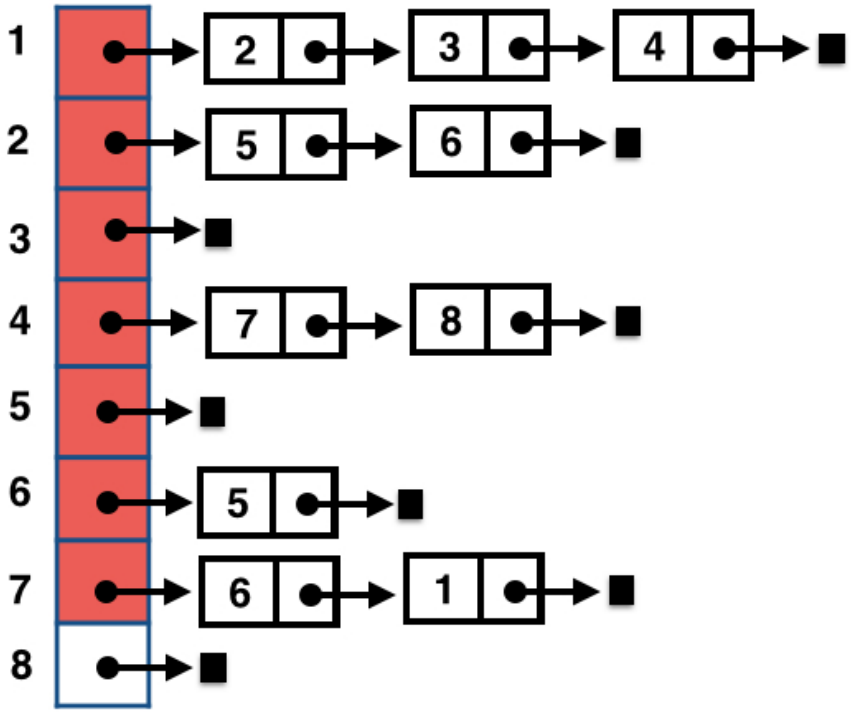

Push all elements in sT into S

Console: 1 2 5 6 3 4 7

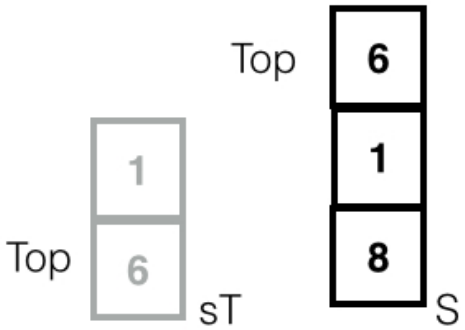

Graph Traversal: Depth-first

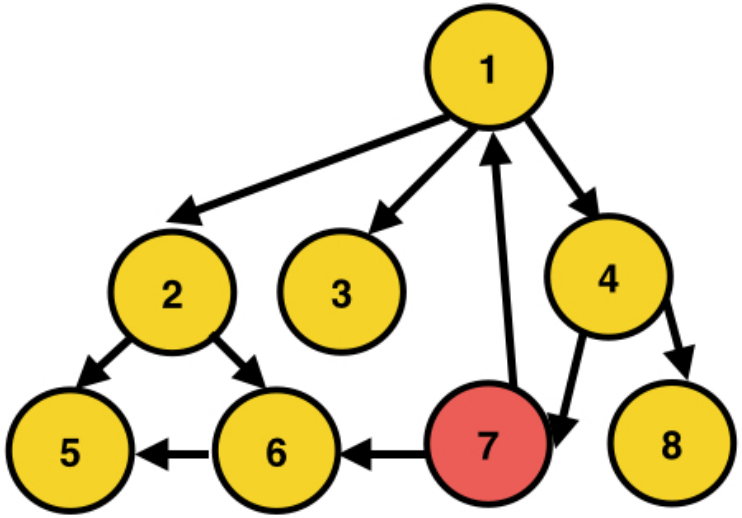

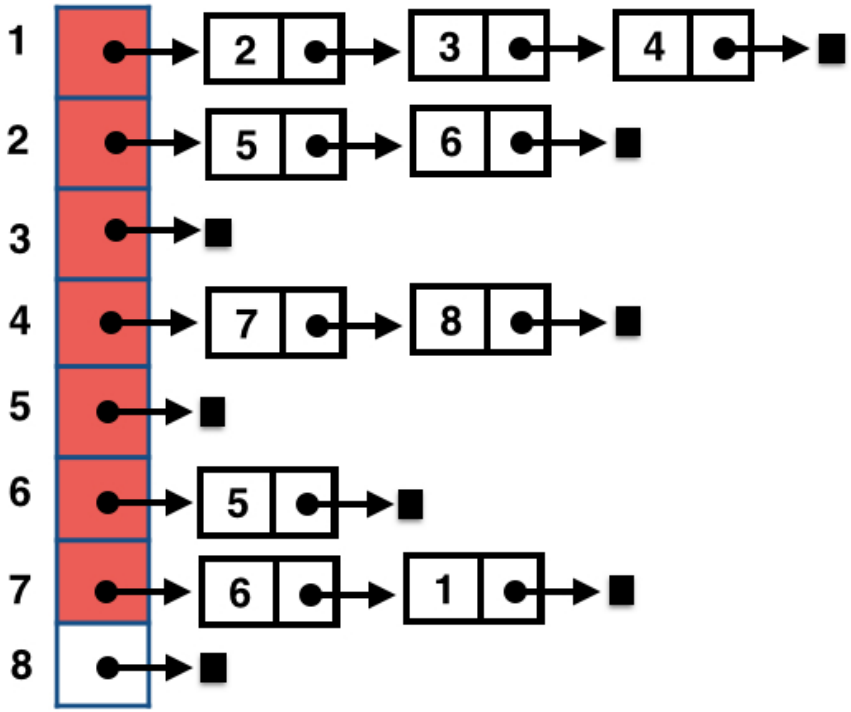

Pop S. Since node 6 is already visited, its value is not printed

Console: 1 2 5 6 3 4 7

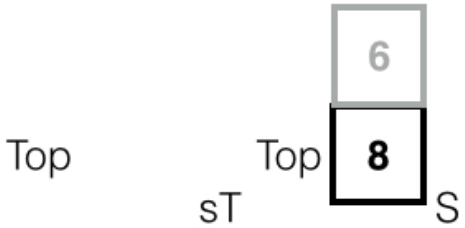

Graph Traversal: Depth-first

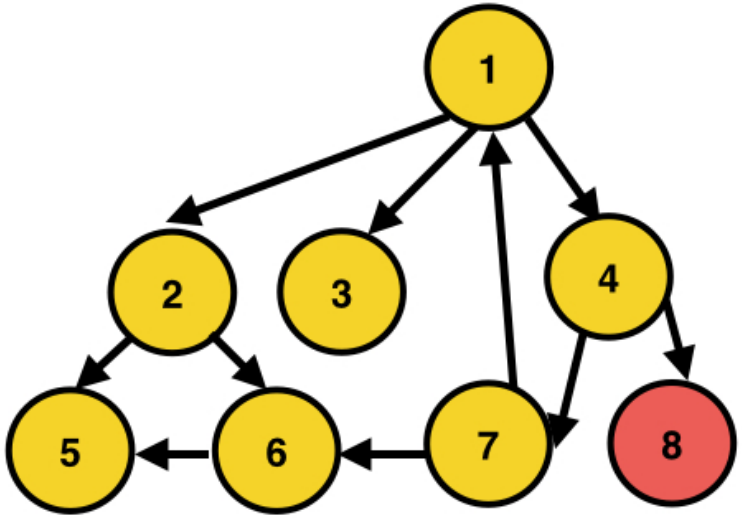

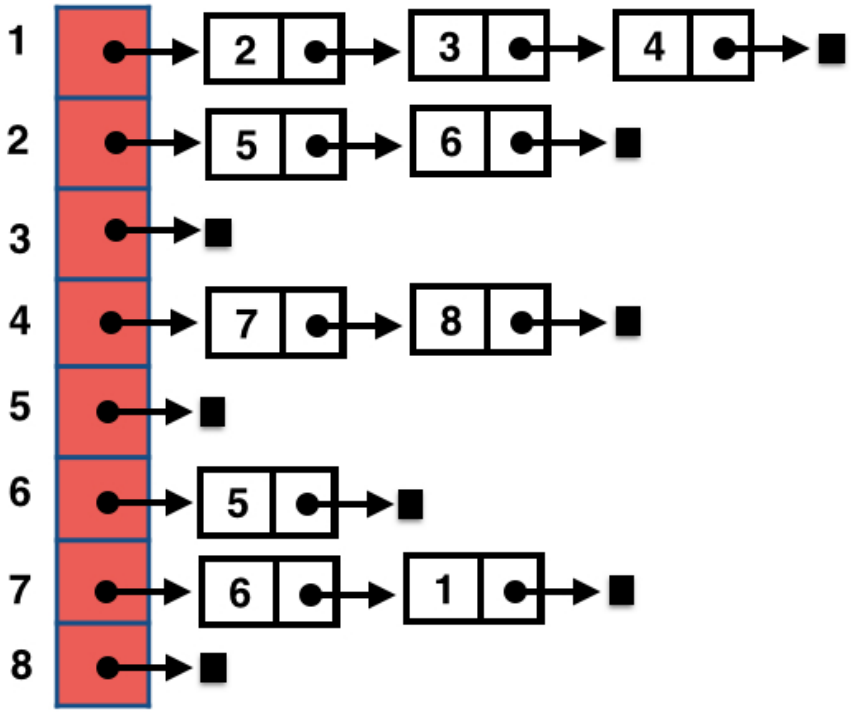

Pop a node from S. Insert node into snapshot list.
Mark the popped node as visited

Cannot push all adjacent nodes to the popped node into sR as node 8 has no adjacency list

Snapshot: 1 2 5 6 3 4 7 8

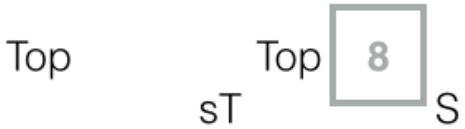

Graph Traversal: Depth-first

```
public Iterable<Vertex<V>> depthFirstTraversal(Vertex<V> u)
{
    List<Vertex<V>> snapshot = new ArrayList<Vertex<V>>();
    LinkedListStack<Vertex<V>> llS = new LinkedListStack();
    LinkedListStack<Vertex<V>> templlS = new LinkedListStack();
    llS.push(u);
    int[] visitedList = new int[numVertices()];
    for (int i=0; i<numVertices(); i++) {
      visitedList[i]=0;
    }
    Vertex<V> v;
    while(!isEmpty(llS)){
        v=llS.pop();
        if (visitedList[v.getLabel()]==0){
          snapshot.add(v);
          visitedList[v.getLabel()]=1;
          for(Edge<E> e : outgoingEdges(v)){
            if(visitedList[v.getLabel()]==0)
              templlS.push(opposite(v,e));
            }
          }
          while(!isEmpty(templlS)){
            llS.push(templlS.pop());
          }
        }
    }
    return snapshot;
}
```

Table of Contents

1. Introduction
2. Graph Definition
3. Graph Representations
4. Graph Applications
   - Graph Searching
   - Topological Ordering in a Graph
   - Supp: Shortest Paths in a Graph
   - Minimal Spanning Trees
   - Supp: Flow Networks
   - Supp: Four-Colour Problem
   - Supp: Hamiltonian Circuits and Travelling Salesman Problem

Topological Ordering in a Graph

- Suppose that there are a set of events that take place in a process
- Some events maybe **contingent** on the completion of other events
- One example that you maybe dealing with currently is course pre-requisites
- Courses can be nodes/vertices and directed edges (v_i, v_j) indicate that v_i is a pre-requisite of v_j
- You may be interested in the order in which you can take these required courses throughout your degree
- This notion of **order** in the graph is referred to as **topological ordering**

Example of a Pre-requisite Graph

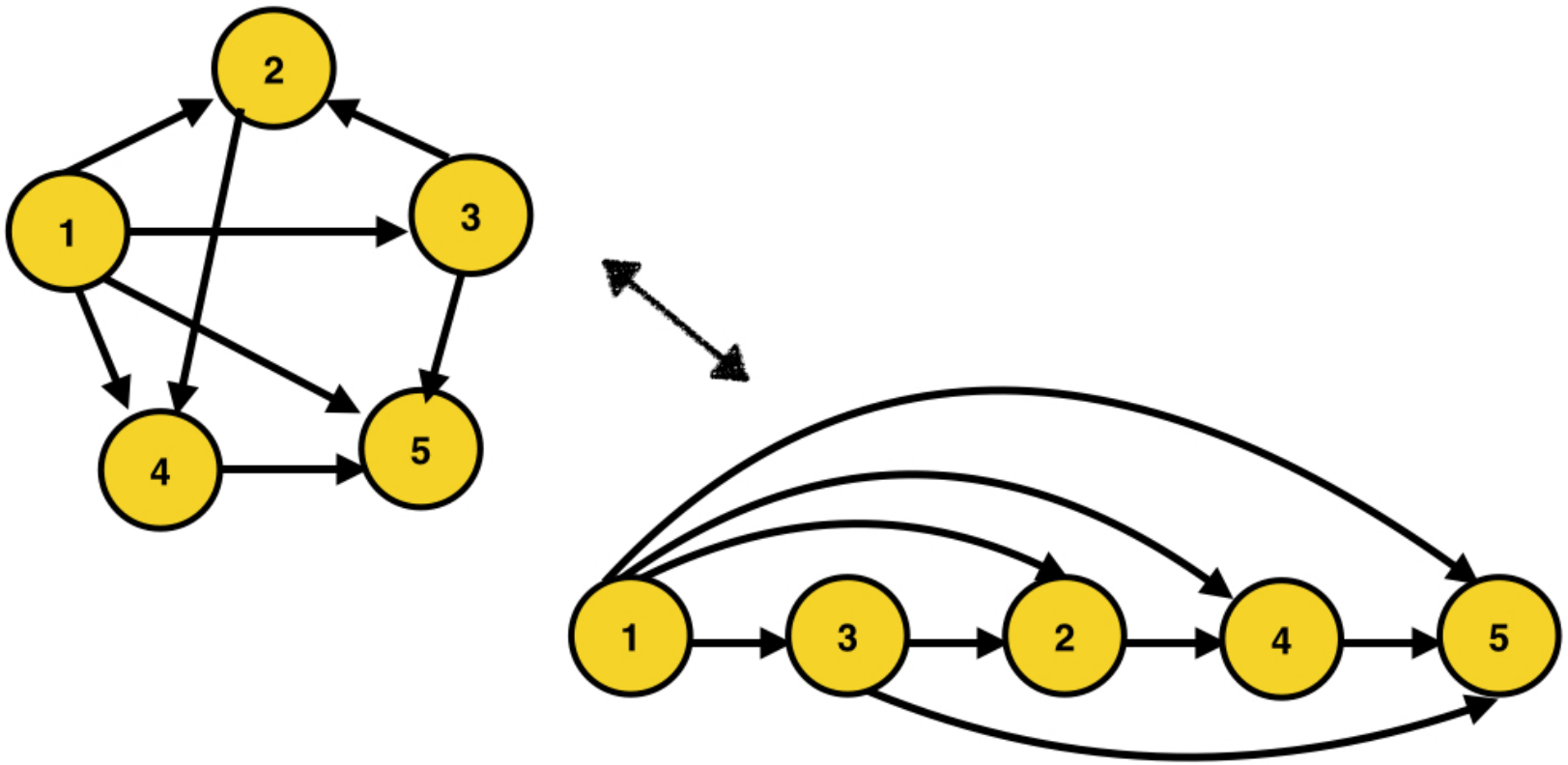

DAGs

Will you be able to find the topological ordering of any graph?

- **No**, there are some **restrictions** on the graph properties
- The graph must be **directed** and **acyclic** (i.e. referred to as DAG *Directed Acyclic Graph*)

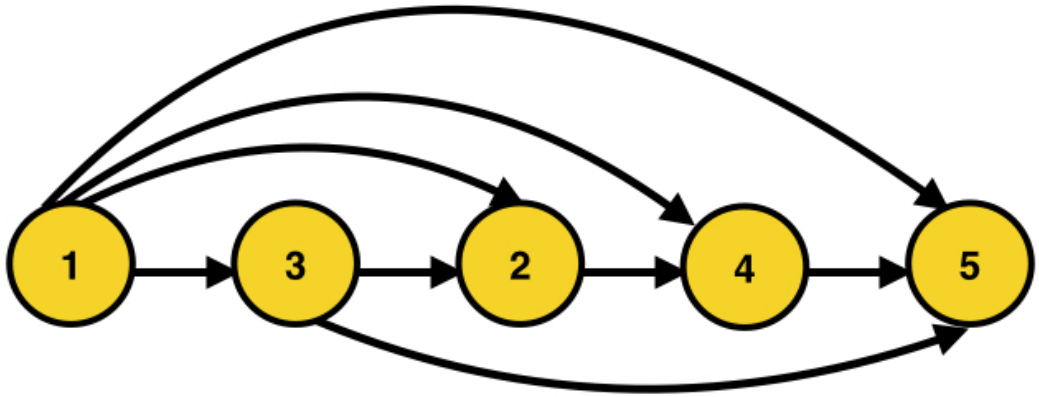

Topological Ordering Algorithm

- What courses can you take **without** any pre-requisites?
  - The node v_x with an in-degree of 0
- The **in-degree** of a node indicates the number of pre-requisites required before being able to take that course
- After taking the first pre-requisite of a course v_x, the number of pre-requisites left before v_x can be taken is the $inDegree(v_x) - 1$
- Suppose that the number of pre-requisites left for v_x is recorded in a variable p_x
- Initializing $p_x = inDegree(v_x)$ $v_x \in V$ and every time a course v_y is taken, decrement p_x variable of all $v_x \in Succ(v_y)$ by 1
- The next course that can be taken is the course v_x with $p_x = 0$
- Repeat above until all courses in the graph are taken

Implementation of Topological Ordering of DAGs

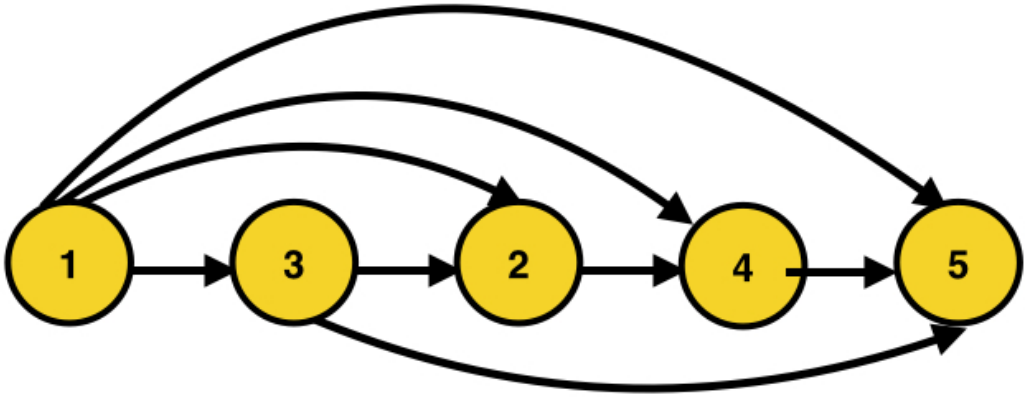

inDegree	0	2	1	2	3
vertices	1	2	3	4	5

visitedList	0	0	0	0	0
vertices	1	2	3	4	5

Q

Snapshot

Implementation of Topological Ordering of DAGs

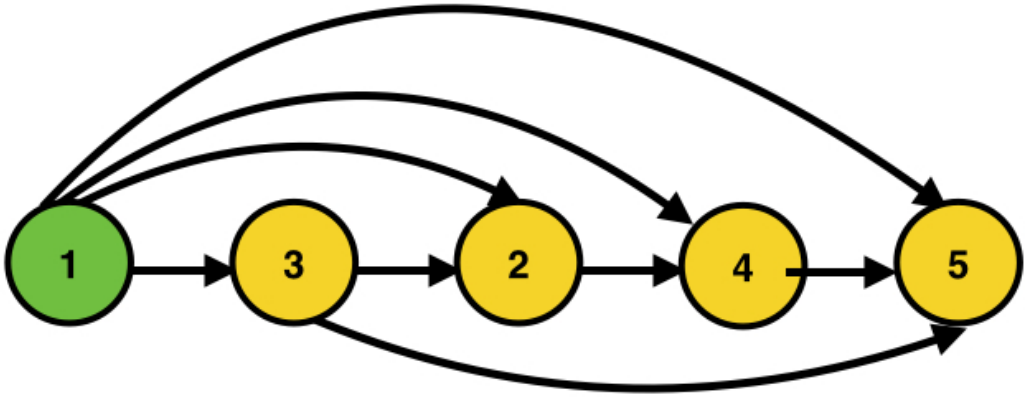

inDegree	0	2	1	2	3
vertices	1	2	3	4	5

visitedList	0	0	0	0	0
vertices	1	2	3	4	5

Snapshot

1

Q

Implementation of Topological Ordering of DAGs

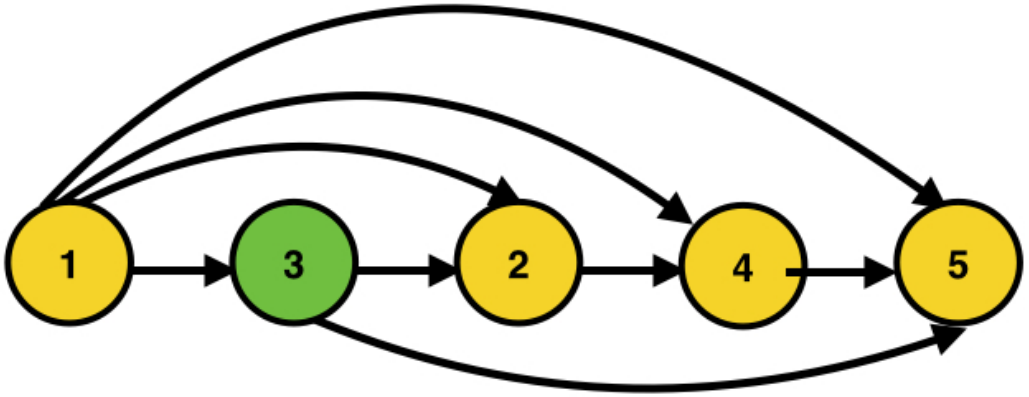

inDegree	0	1	0	1	2
vertices	1	2	3	4	5

visitedList	1	0	0	0	0
vertices	1	2	3	4	5

Snapshot:
1

3

Q

Implementation of Topological Ordering of DAGs

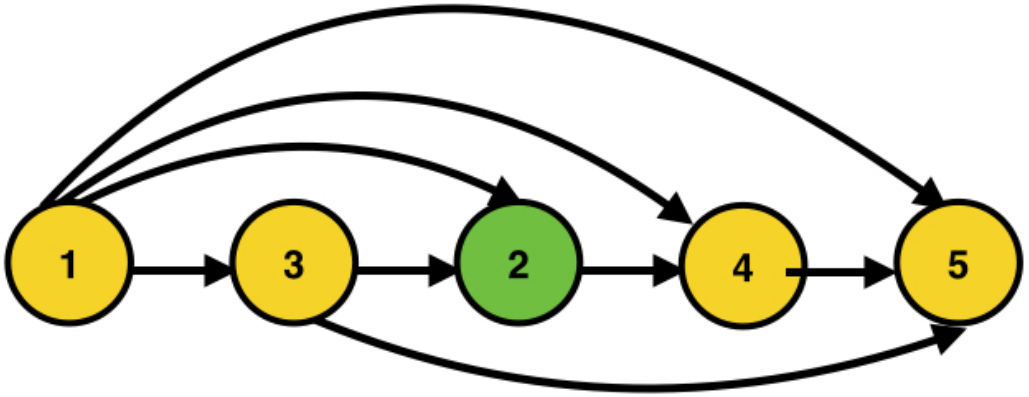

inDegree	0	0	0	1	1
vertices	1	2	3	4	5

visitedList	1	0	1	0	0
vertices	1	2	3	4	5

Snapshot:
1 3

2

Q

Implementation of Topological Ordering of DAGs

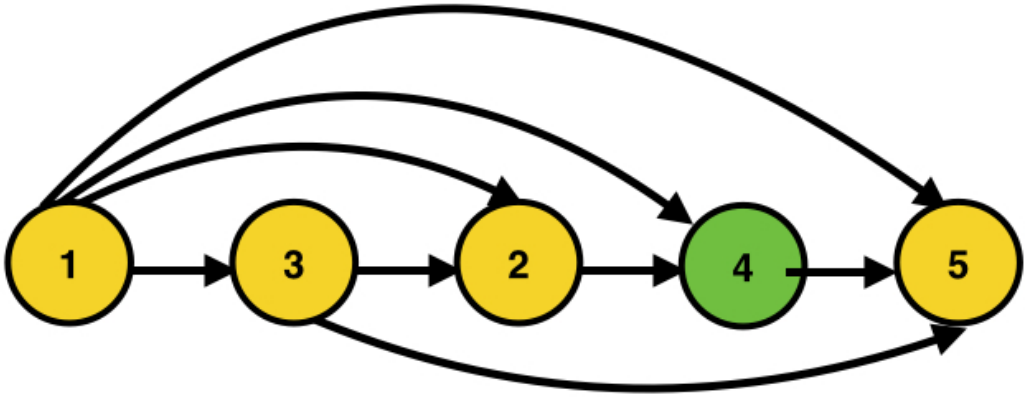

inDegree	0	0	0	0	1
vertices	1	2	3	4	5

visitedList	1	1	1	0	0
vertices	1	2	3	4	5

Snapshot:
1 3 2

4

Q

Implementation of Topological Ordering of DAGs

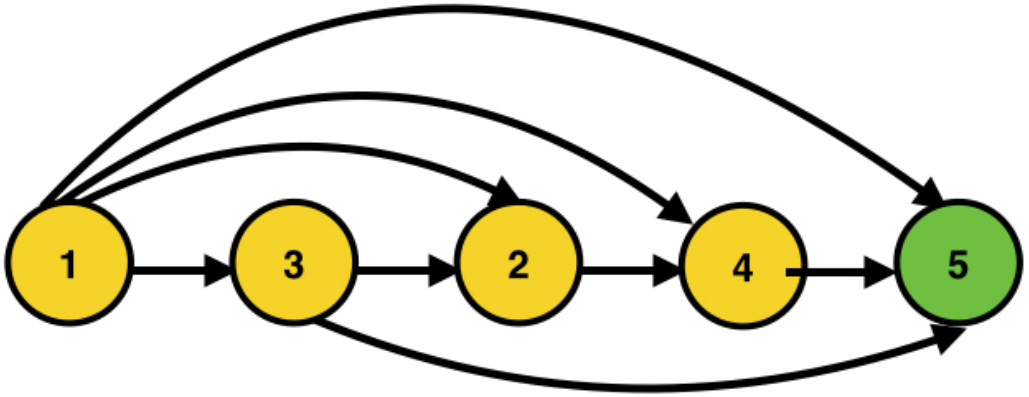

inDegree	0	0	0	0	0
vertices	1	2	3	4	5

visitedList	1	1	1	1	0
vertices	1	2	3	4	5

Snapshot:
1 3 2 4

5

Q

Implementation of Topological Ordering of DAGs

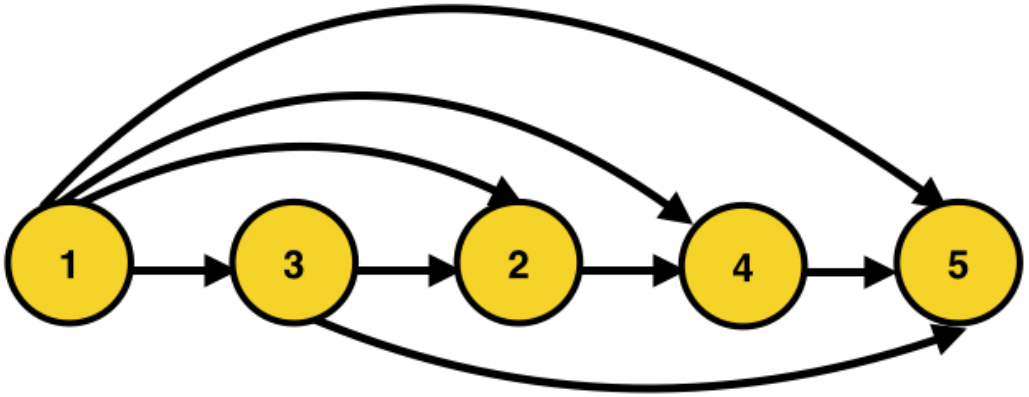

inDegree	0	0	0	0	0
vertices	1	2	3	4	5

visitedList	1	1	1	1	1
vertices	1	2	3	4	5

Snapshot:
1 3 2 4 5

Q

Implementation of Topological Ordering of DAGs

```
public Iterable<Vertex<V>> topologicalOrdering()
{
  List<Vertex<V>> snapshot = new ArrayList<Vertex<V>>();
  LinkedListQueue<Vertex<V>> llQ = new LinkedListQueue();
  int[] visitedList = new int[numVertices()];
  int[] inDegArr = new int[numVertices()];

  for (Vertex<V> v : vertices()) {
    visitedList[v.getLabel()]=0;
    inDegArr[v.getLabel()]=inDegree(v);
    if(inDegree(v)==0)
      llQ.enqueue(v);
  }

  Vertex<V> u;
  while (!isEmpty(llQ)) {
    u=dequeue(llQ);
    snapshot.add(u);
    visitedList[u.getLabel()]=1;
    for(Edge<E> e : outgoingEdges(u)){
      inDegArr[opposite(u,e).getLabel()]--;
    }
    for (Vertex<V> v : vertices()) {
      if (inDegArr[v.getLabel()]==0 && visitedList[v.getLabel()]!=1){
          llQ.enqueue(v);
      }
    }
  }
  return snapshot;
}
```

Table of Contents

1. Introduction
2. Graph Definition
3. Graph Representations
4. Graph Applications
   - Graph Searching
   - Topological Ordering in a Graph
   - Supp: Shortest Paths in a Graph
   - Minimal Spanning Trees
   - Supp: Flow Networks
   - Supp: Four-Colour Problem
   - Supp: Hamiltonian Circuits and Travelling Salesman Problem

Shortest Path in a Graph

- **Weighted** digraphs are graphs containing **directed** edges that are associated with values/**weights**
- Weights can be associated with distances, costs, times, etc
- Examples of weighted digraphs are:
  - Vertices/nodes representing cities, edges depicting roads connecting cities and weights on edges denoting the cost/distances/time
- Given a weighted digraph, one important question that may arise is: What is the **shortest path** from city A to city B?
- A **brute force** method may require exploring all possible permutations of nodes in the graph to select the least cost path

An Example of a Weighted Digraph

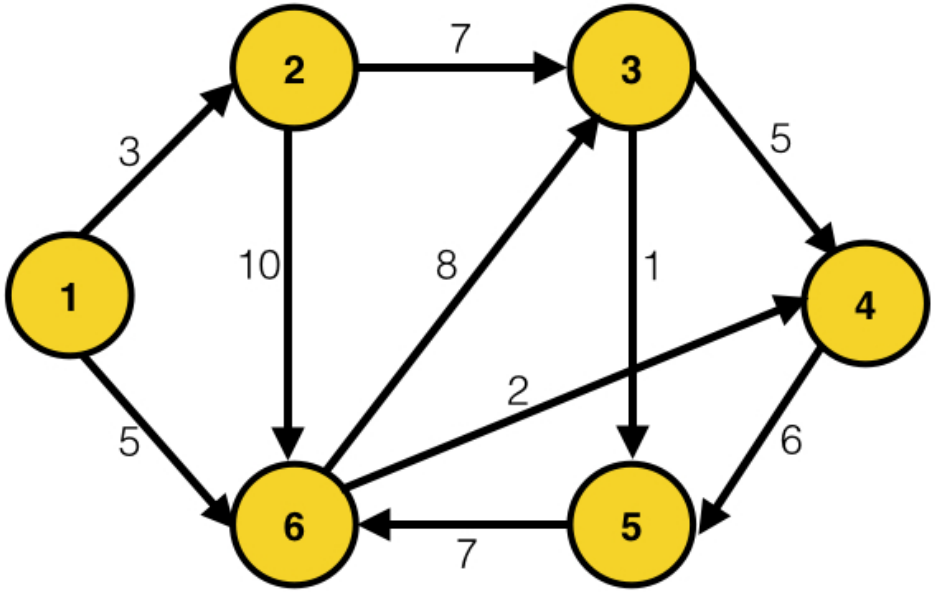

Shortest Path in a Graph

- A very well known algorithm that tackles this problem of finding the shortest path is called the **Dijkstra's** algorithm
- In order to implement this algorithm in Java, we shall make use of **adjacency matrix** representation of the graph as an example
  - $A[i, j] = w_{i,j}$ if $e_k = (v_i, v_j) \in E$ and $weight(e_k) = w_{i,j}$
  - Else $A[i, i] = 0$ otherwise $A[i, j] = \infty$
- If the start s and destination d nodes are not directly connected by an edge, the Dijkstra's algorithm seeks for the next best candidate that can serve as an intermediate node connecting s and d at every stage of the algorithm

Summary of Dijkstra's Approach

- Two different sets of vertices W and V are maintained
- At every stage, a new node w from V is added to W if it has **minimal distance** to a node in W
- W initially contains the node s and is **enlarged** over the course of the algorithm with *good* candidates that can form a path from s to d until all vertices in the graph are added to W
- Suppose that node w is added to W and the shortest distance of w from s is sDw
- Since a new node has been added to W the shortest distance of all other nodes in $v \in V$ to s may be better if these can connect via w
- Suppose that the current shortest distance of v from s is sDv and the distance of v to s via w is $sDw + A[w][v]$
- sDv is updated to $sDw + A[w][v]$ if this has a smaller value than the current sDv (this means that the cost of connecting to s via w is smaller than the cost of connecting to s in the previous stage)

Application of Dijkstra's Algorithm

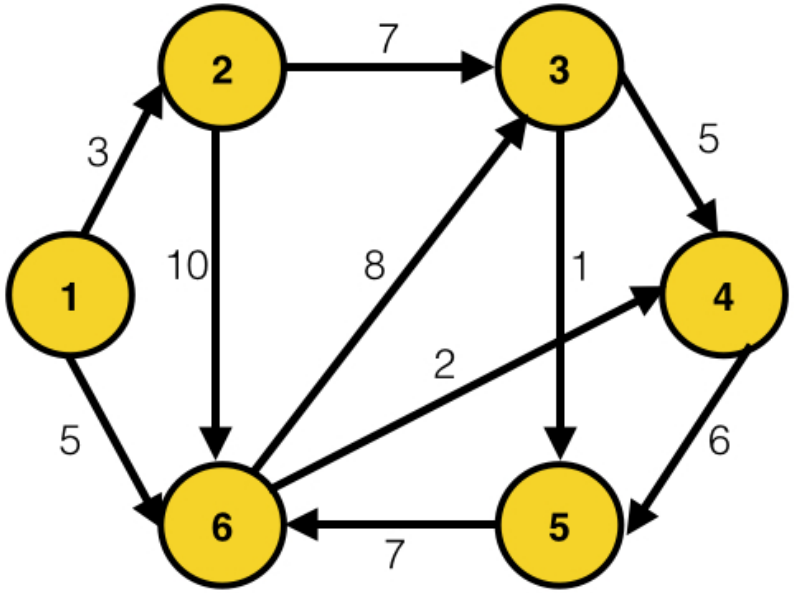

	1	2	3	4	5	6
1	0	3	∞	∞	∞	5
2	∞	0	7	∞	∞	10
3	∞	∞	0	5	1	∞
4	∞	∞	∞	0	6	∞
5	∞	∞	∞	∞	0	7
6	∞	∞	8	2	∞	0

Find the distance of the shortest path from 1 to 5

Application of Dijkstra's Algorithm

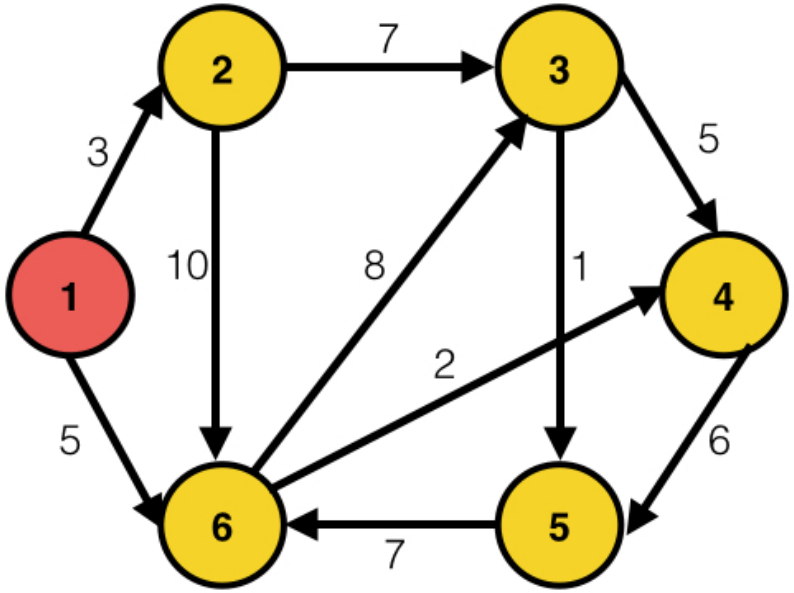

	1	2	3	4	5	6
1	0	3	∞	∞	∞	5
2	∞	0	7	∞	∞	10
3	∞	∞	0	5	1	∞
4	∞	∞	∞	0	6	∞
5	∞	∞	∞	∞	0	7
6	∞	∞	8	2	∞	0

Stage	W	V	w	sDw	sD1	sD2	sD3	sD4	sD5	sD6
1	1	2,3,4,5,6	1	0	0	**3**	∞	∞	∞	5
2										
3										
4										
5										
6										

Application of Dijkstra's Algorithm

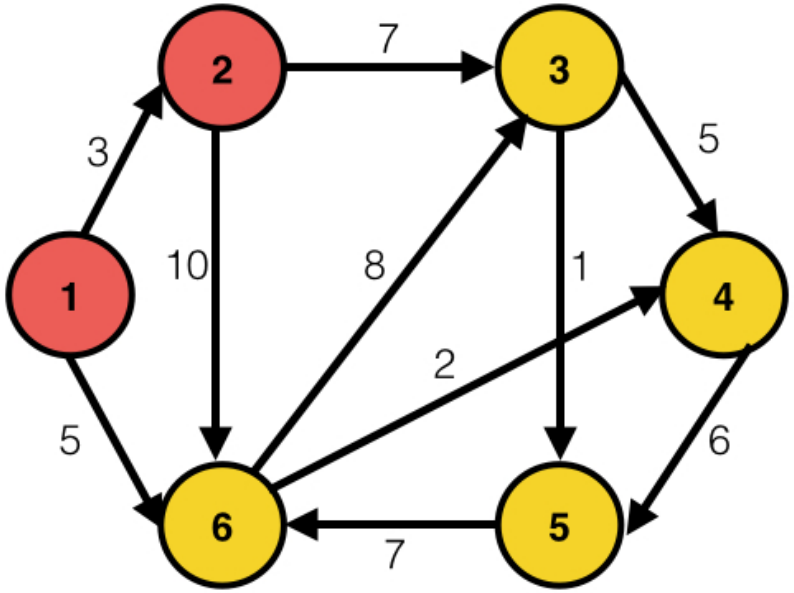

	1	2	3	4	5	6
1	0	3	∞	∞	∞	5
2	∞	0	7	∞	∞	10
3	∞	∞	0	5	1	∞
4	∞	∞	∞	0	6	∞
5	∞	∞	∞	∞	0	7
6	∞	∞	8	2	∞	0

Stage	W	V	w	sDw	sD1	sD2	sD3	sD4	sD5	sD6
1	1	2,3,4,5,6	1	0	0	3	∞	∞	∞	5
2	1,2	3,4,5,6	2	3	0	3	10	∞	∞	**5**
3										
4										
5										
6										

Application of Dijkstra's Algorithm

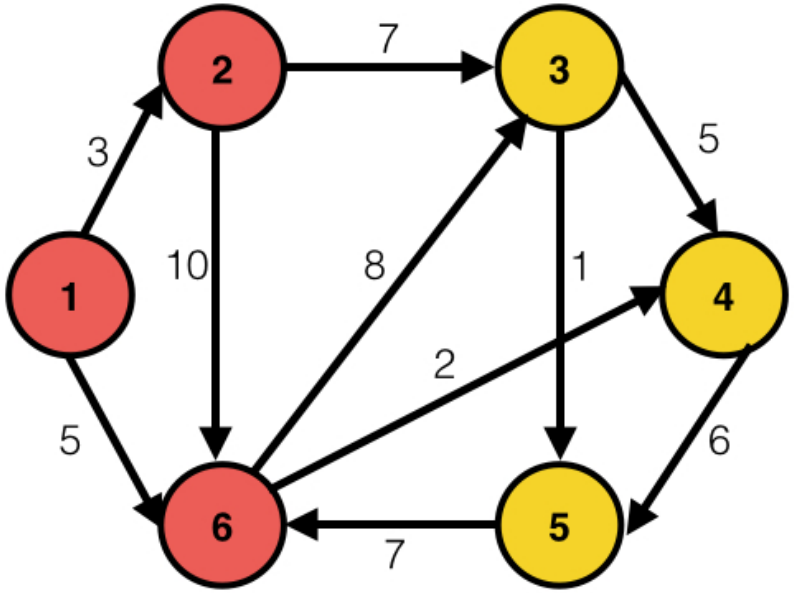

	1	2	3	4	5	6
1	0	3	∞	∞	∞	5
2	∞	0	7	∞	∞	10
3	∞	∞	0	5	1	∞
4	∞	∞	∞	0	6	∞
5	∞	∞	∞	∞	0	7
6	∞	∞	8	2	∞	0

Stage	W	V	w	sDw	sD1	sD2	sD3	sD4	sD5	sD6
1	1	2,3,4,5,6	1	0	0	3	∞	∞	∞	5
2	1,2	3,4,5,6	2	3	0	3	10	∞	∞	5
3	1,2,6	3,4,5	6	5	0	3	10	**7**	∞	5
4										
5										
6										

Application of Dijkstra's Algorithm

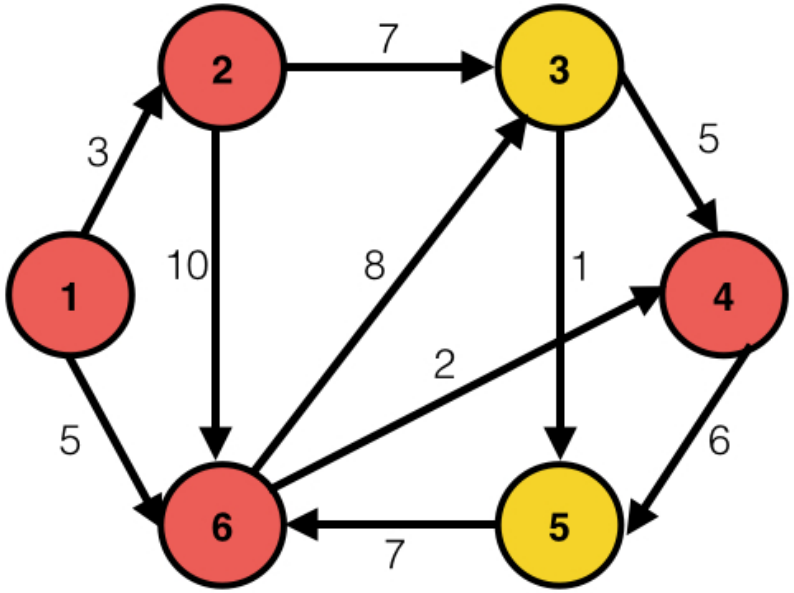

	1	2	3	4	5	6
1	0	3	∞	∞	∞	5
2	∞	0	7	∞	∞	10
3	∞	∞	0	5	1	∞
4	∞	∞	∞	0	6	∞
5	∞	∞	∞	∞	0	7
6	∞	∞	8	2	∞	0

Stage	W	V	w	sDw	sD1	sD2	sD3	sD4	sD5	sD6
1	1	2,3,4,5,6	1	0	0	3	∞	∞	∞	5
2	1,2	3,4,5,6	2	3	0	3	10	∞	∞	5
3	1,2,6	3,4,5	6	5	0	3	10	7	∞	5
4	1,2,6,4	3,5	4	7	0	3	**10**	7	13	5
5										
6										

Application of Dijkstra's Algorithm

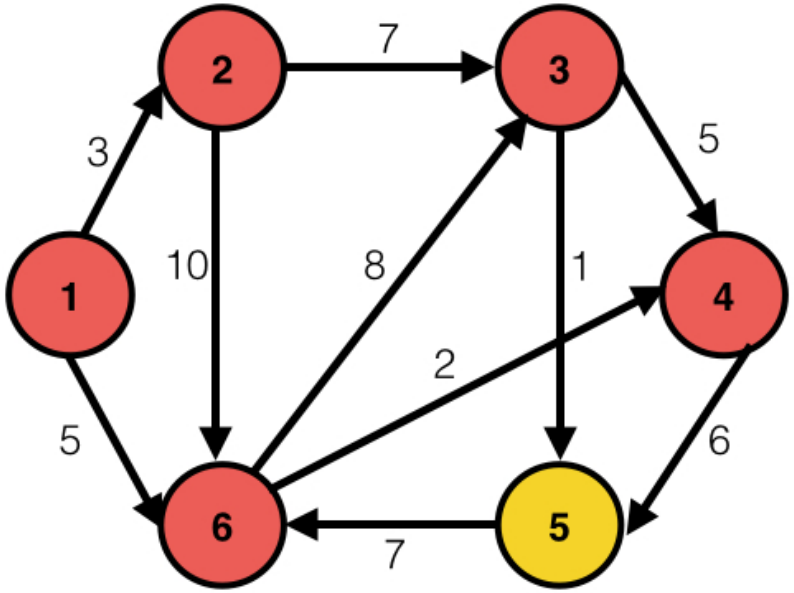

	1	2	3	4	5	6
1	0	3	∞	∞	∞	5
2	∞	0	7	∞	∞	10
3	∞	∞	0	5	1	∞
4	∞	∞	∞	0	6	∞
5	∞	∞	∞	∞	0	7
6	∞	∞	8	2	∞	0

Stage	W	V	w	sDw	sD1	sD2	sD3	sD4	sD5	sD6
1	1	2,3,4,5,6	1	0	0	3	∞	∞	∞	5
2	1,2	3,4,5,6	2	3	0	3	10	∞	∞	5
3	1,2,6	3,4,5	6	5	0	3	10	7	∞	5
4	1,2,6,4	3,5	4	7	0	3	10	7	13	5
5	1,2,6,4,3	5	3	10	0	3	10	7	**11**	5
6										

Application of Dijkstra's Algorithm

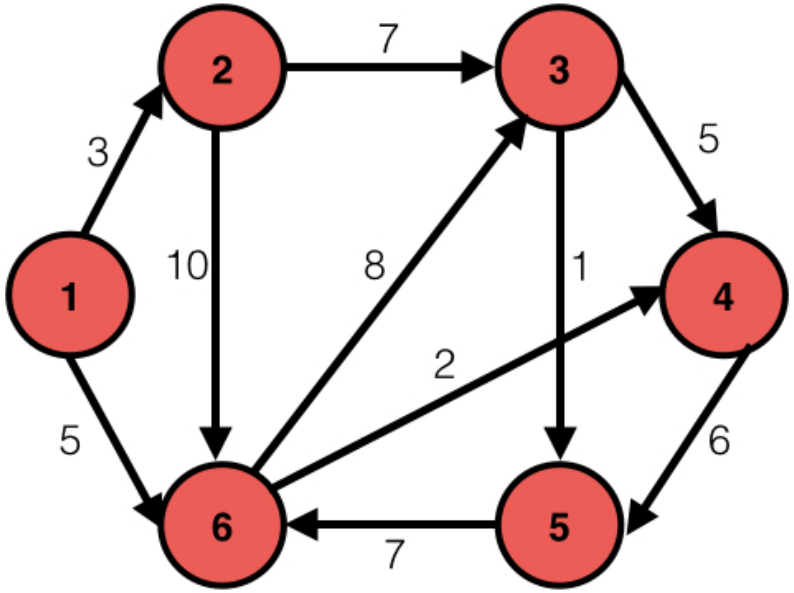

	1	2	3	4	5	6
1	0	3	∞	∞	∞	5
2	∞	0	7	∞	∞	10
3	∞	∞	0	5	1	∞
4	∞	∞	∞	0	6	∞
5	∞	∞	∞	∞	0	7
6	∞	∞	8	2	∞	0

Stage	W	V	w	sDw	sD1	sD2	sD3	sD4	sD5	sD6
1	1	2,3,4,5,6	1	0	0	3	∞	∞	∞	5
2	1,2	3,4,5,6	2	3	0	3	10	∞	∞	5
3	1,2,6	3,4,5	6	5	0	3	10	7	∞	5
4	1,2,6,4	3,5	4	7	0	3	10	7	13	5
5	1,2,6,4,3	5	3	10	0	3	10	7	11	5
6	1,2,6,4,3,5		5	**11**	0	3	10	7	11	5

Application of Dijkstra's Algorithm

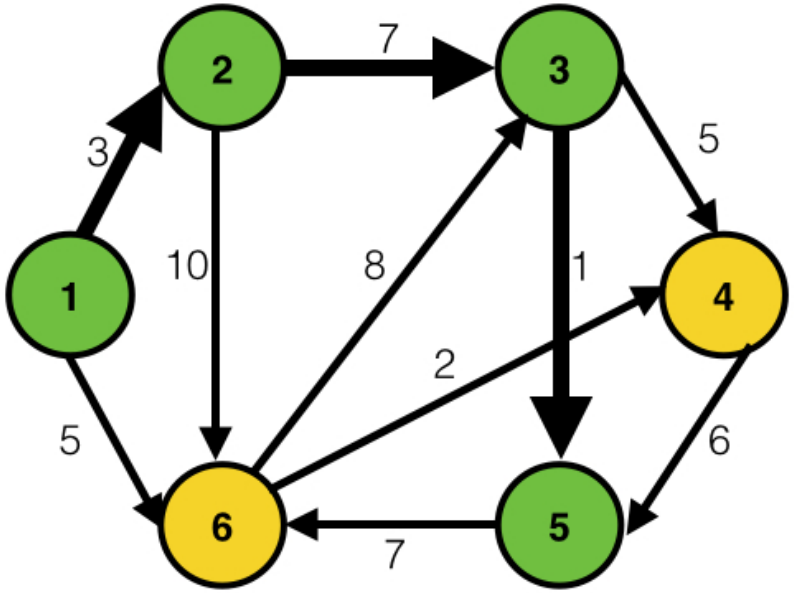

	1	2	3	4	5	6
1	0	3	∞	∞	∞	5
2	∞	0	7	∞	∞	10
3	∞	∞	0	5	1	∞
4	∞	∞	∞	0	6	∞
5	∞	∞	∞	∞	0	7
6	∞	∞	8	2	∞	0

Stage	W	V	w	sDw	sD1	sD2	sD3	sD4	sD5	sD6
1	1	2,3,4,5,6	**1**	0	0	**3**	∞	∞	∞	5
2	1,2	3,4,5,6	**2**	3	0	3	**10**	∞	∞	5
3	1,2,6	3,4,5	6	5	0	3	10	7	∞	5
4	1,2,6,4	3,5	4	7	0	3	10	7	13	5
5	1,2,6,4,3	5	**3**	10	0	3	10	7	**11**	5
6	1,2,6,4,3,5		5	**11**	0	3	10	7	11	5

Implementation of Dijkstra's Algorithm

Implementation Summary:

1. Initialization:
   - i Create two lists for V and W
   - ii Set the starting vertex to be w
   - iii Insert w into W and insert remaining vertices into V
2. while-loop conditioned on V not being empty
   - i Find the node with the minimal distance to s, set it to be w, remove it from V and insert it into W
   - ii Update the distance metric of all nodes remaining in V to $sDv = min(sDv, sDw + A[w][v])$

Implementation of Dijkstra's Algorithm

```
public double[] dijkstraShortestDistance(struct adjMatrix * aM, int s)
{
  List<Vertex<V>> W = new ArrayList<Vertex<V>>();
  List<Vertex<V>> V = new ArrayList<Vertex<V>>();
  List<Vertex<V>> t = new ArrayList<Vertex<V>>();
  int[] sDv = new int[numVertices()];
  W.add(s);
  for(Vertex<V> u: vertices()){
    if(v!=s){
      V.add(u);
    }
    Edge<E> e = getEdge(s,u);
    if(e){
      sDv[u.getLabel()]=e.getWeight();
    }else{
      sDv[u.getLabel()]=INF;
    }
  }
  int mD=INF;
  Vertex<V> w;
  while (!isEmpty(V)) {
    mD=INF;
    for(Vertex<V> u : V){
      if(mD>sDv[u.getLabel()]){
        mD=sDv[u.getLabel()];
        w=u;
      }
    }
    W.add(w);
    V.remove(w);
    for(Vertex<V> u : V){
      if(sDv[u.getLabel()]>mD+getWeight(w,u)){
        sDv[u.getLabel()]=mD+getWeight(w,u);
      }
    }
  }
  return sDv;
}
```

Performance: $O(n^2)$

Proving that Dijkstra's Algorithm Works via Induction

Base case: Prove that Dijkstra's algorithm works for the stage 2 (where $W = v_s$)

- A new addition into W at Stage 2 is the one that is the closest to v_s

Inductive step: Prove that if the Dijkstra's algorithm holds for the ith stage then it also holds for $(i+1)^{th}$ stage

- Suppose that node w is selected by the Dijkstra's algorithm to be the next node to be inserted into W at Stage $i+1$ but there exists another node r with a shorter path from v_s (**Proof by contradiction**)
- This cannot be true due to the following reasons:
  - All nodes added to W up to stage i do result in the shortest path (based on our assumption)
  - Shortest distances of all other nodes in $x \in V$ are updated based on $min(sD_x, sD_w + T[w][x])$
  - Since $T[w][x]$ is not a negative number, the next candidate selected based on this metric must have the minimal distance to the set W

Table of Contents

1. Introduction
2. Graph Definition
3. Graph Representations
4. Graph Applications
   - Graph Searching
   - Topological Ordering in a Graph
   - Supp: Shortest Paths in a Graph
   - Minimal Spanning Trees
   - Supp: Flow Networks
   - Supp: Four-Colour Problem
   - Supp: Hamiltonian Circuits and Travelling Salesman Problem

Spanning Trees

- Consider an **undirected**, **connected** graph $G(V, E)$ with **weighted** edges
- A **spanning tree** is a tree constructed using some edges in E that connects all vertices in the graph
- The sum of all weights on the edges used to create the spanning tree is the **weight** W of the spanning tree

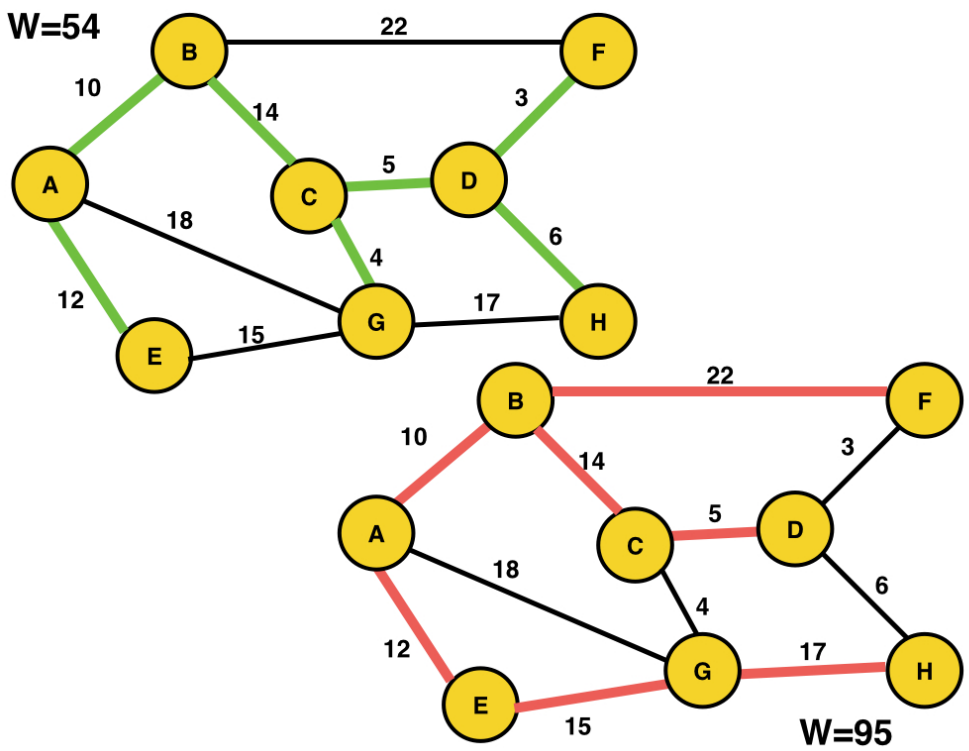

Minimal Spanning Trees

- The spanning tree with **minimal** such summed weight W is called the **minimal spanning tree**
- What are the applications of these?
  - Circuits (need to connect separate electric terminals but cost of wiring is important)
  - Communications: broadcasting signals

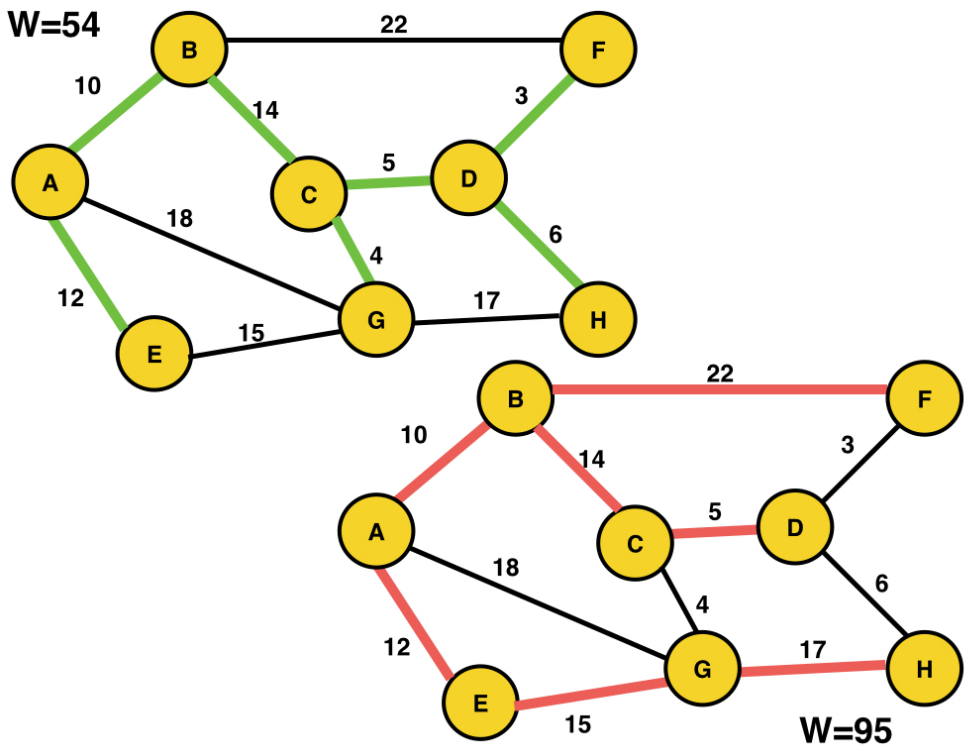

Finding the Minimal Spanning Tree

- **Prim's algorithm** is used widely to construct the minimal spanning tree of a graph (named after Dr Robert C. Prim)
- Prim's algorithm is also called the **greedy** algorithm as decisions are made without taking the full picture into account (local decisions)
- This is one of the **few** greedy algorithm that results in the **globally optimal solution**
  - Suppose that there only exists one hill in a region
  - How can you reach the top/summit of the tallest hill?
  - One way is to travel in the direction that is locally steep (ascent is fastest)
  - This will not work if there are multiple hills in the region - you might end up at a hill that is not the tallest
- Typically greedy algorithms do **not** work for most applications

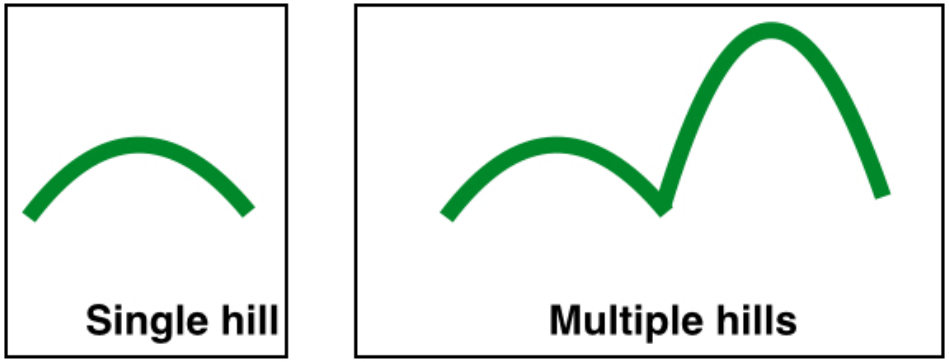

Prim's Algorithm in Action

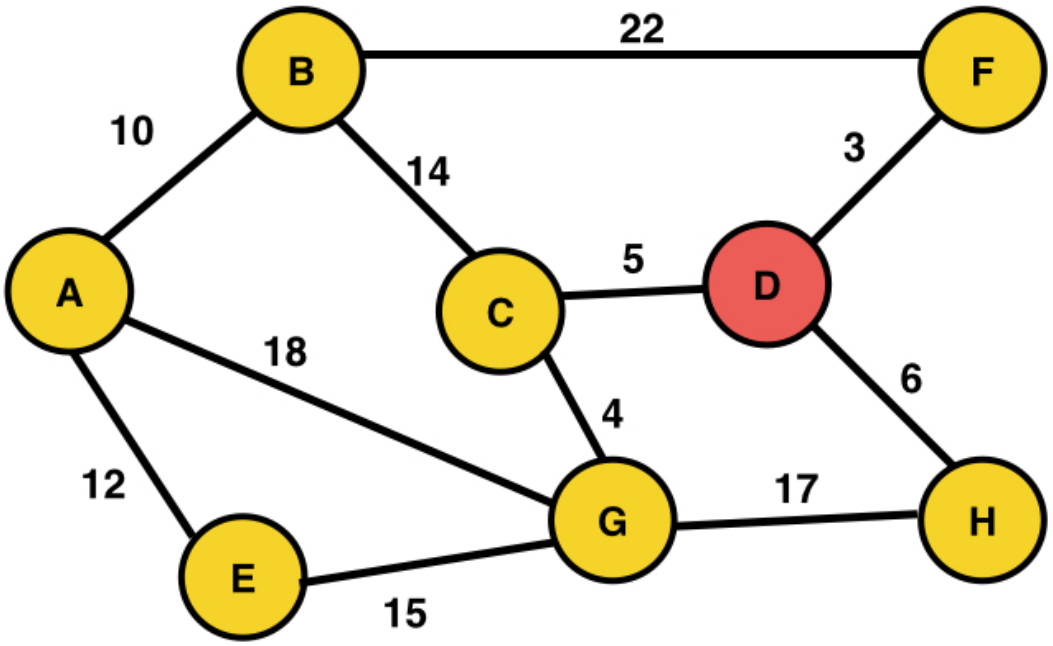

T: D

U:

Prim's Algorithm in Action

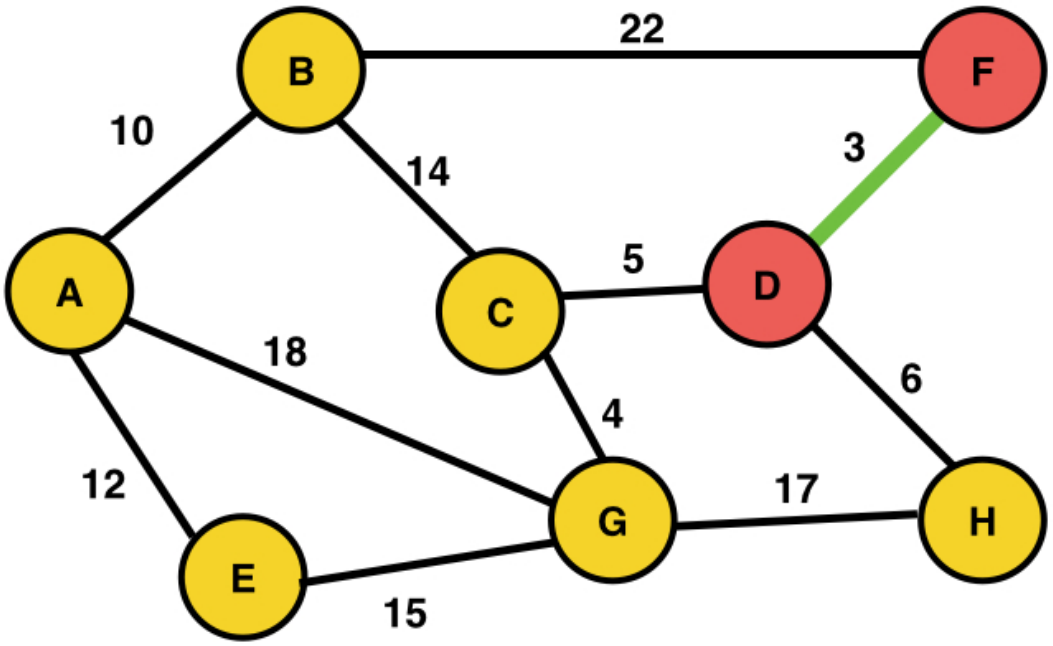

T: D, F

U: (D,F)

Prim's Algorithm in Action

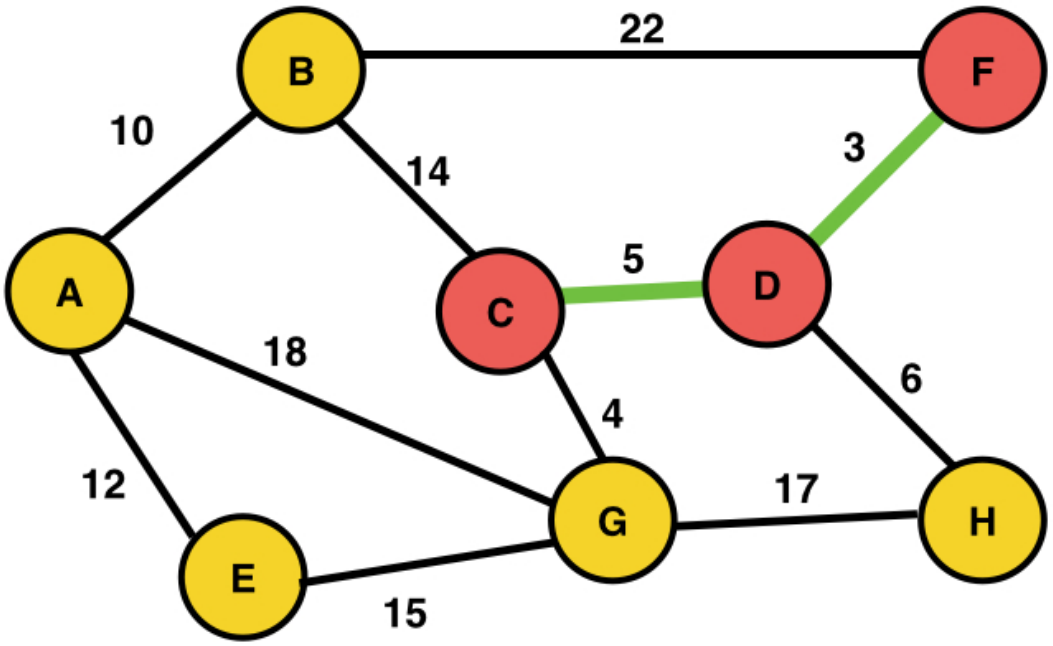

T: D, F, C

U: (D,F), (D,C)

Prim's Algorithm in Action

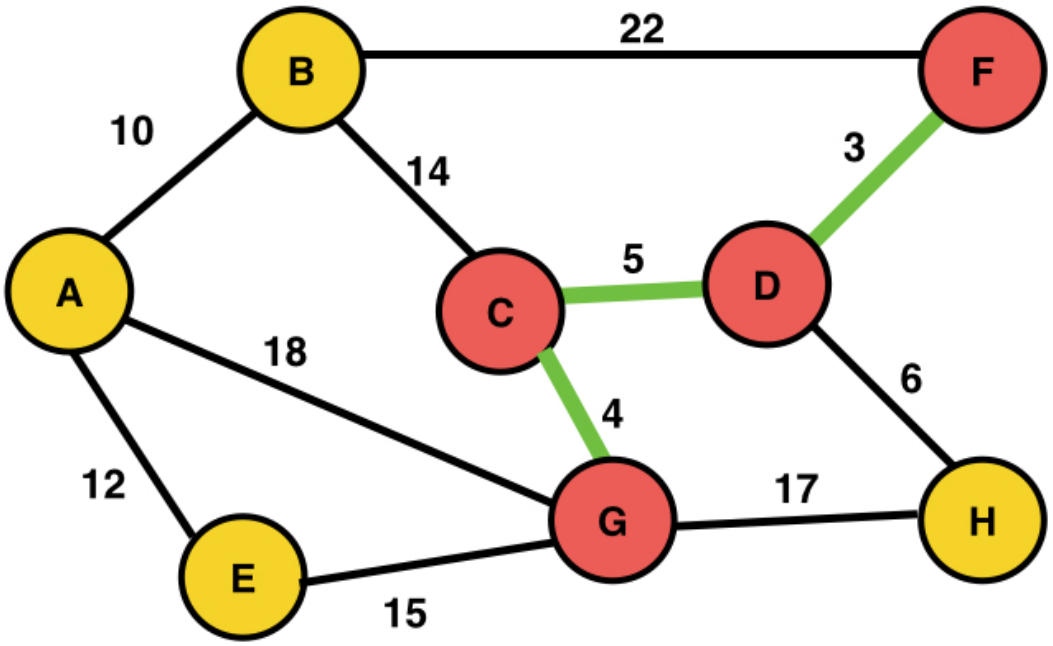

T: D, F, C, G

U: (D,F), (D,C), (C,G)

Prim's Algorithm in Action

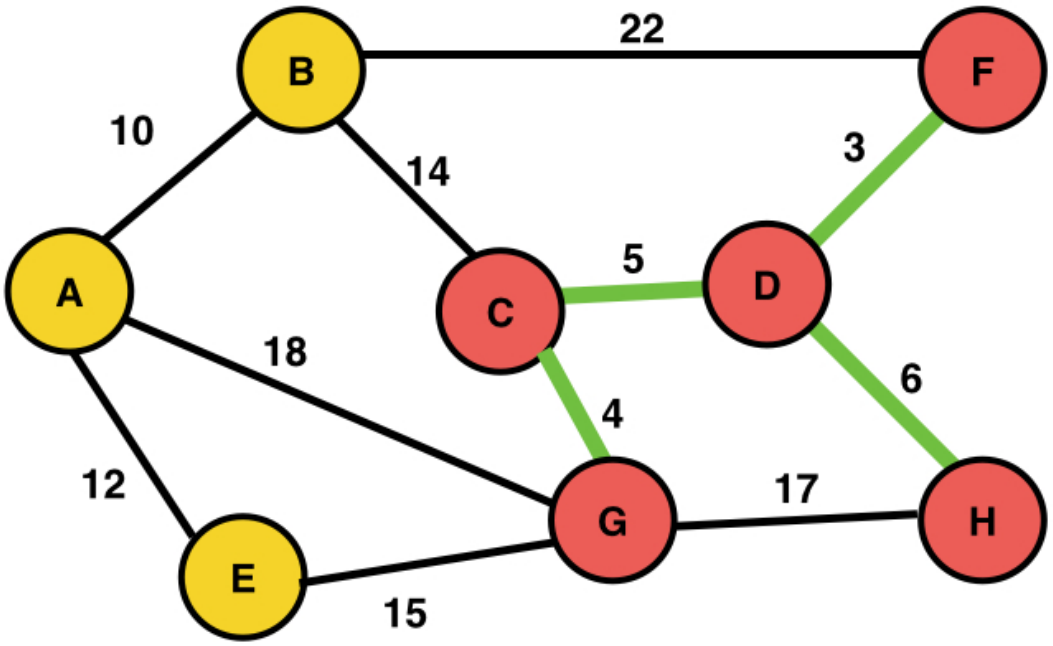

T: D, F, C, G, H

U: (D,F), (D,C), (C,G), (D,H)

Prim's Algorithm in Action

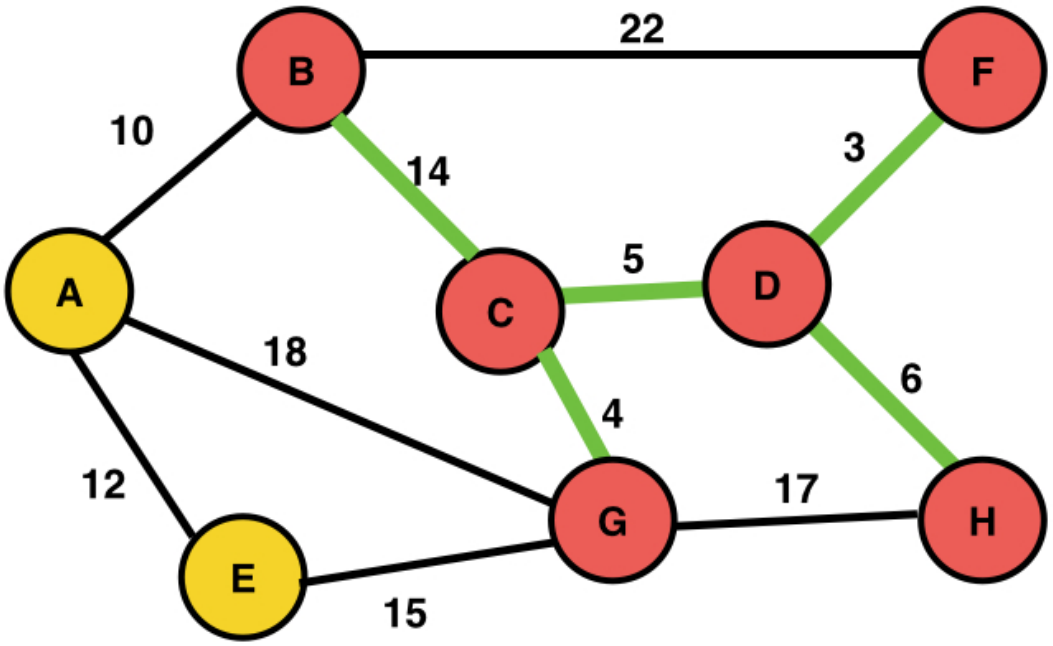

T: D, F, C, G, H, B

U: (D,F), (D,C), (C,G), (D,H), (C,B)

Prim's Algorithm in Action

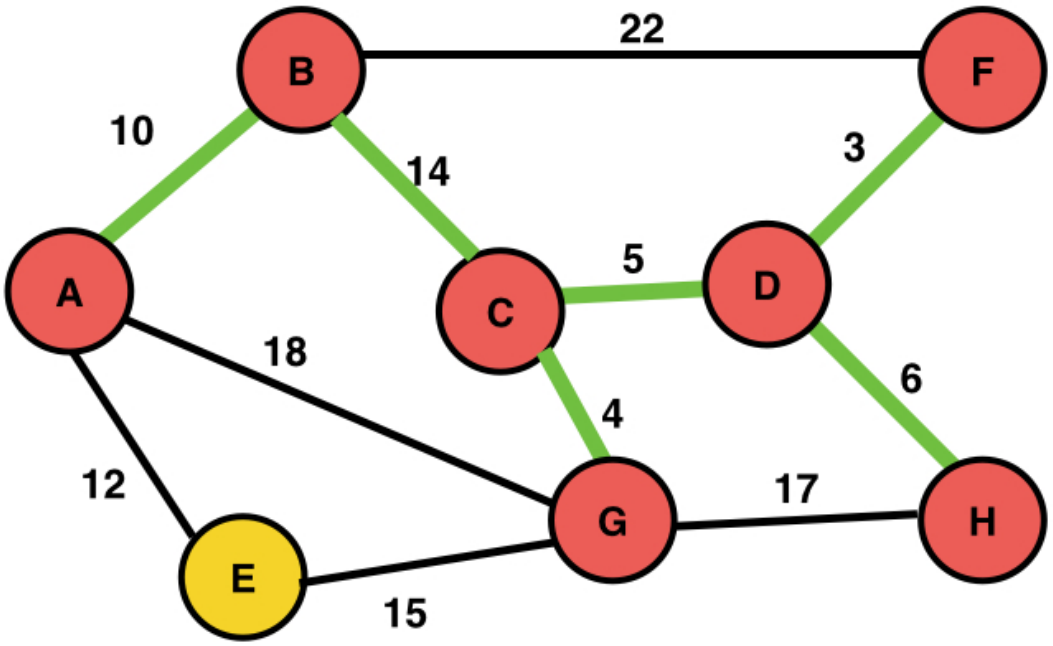

T: D, F, C, G, H, B, A

U: (D,F), (D,C), (C,G), (D,H), (C,B), (B,A)

Prim's Algorithm in Action

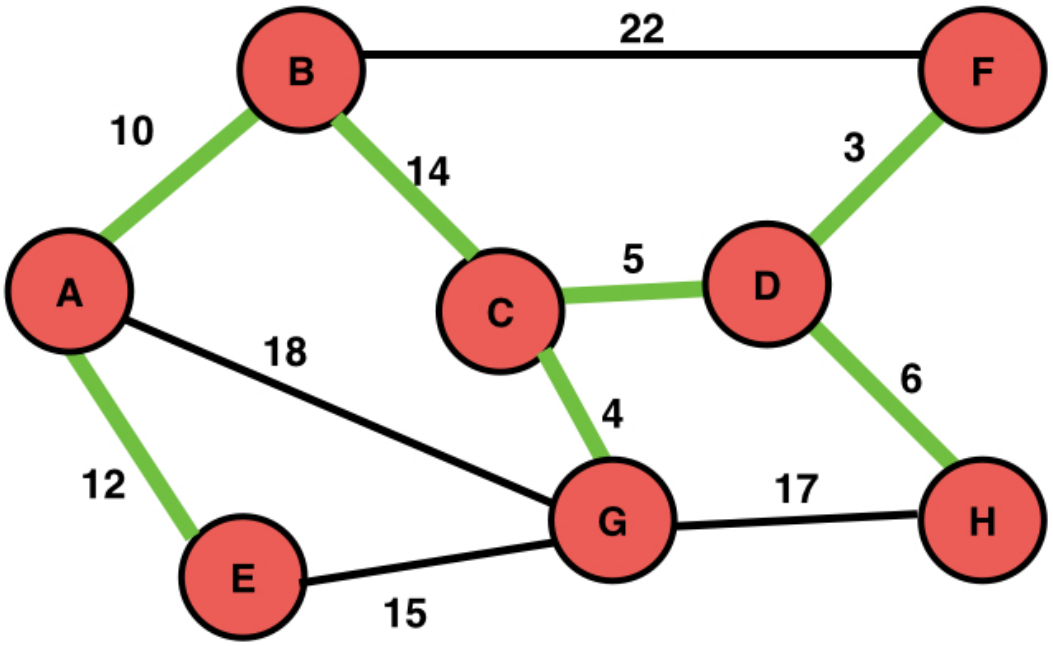

T: D, F, C, G, H, B, A, E

U: (D,F), (D,C), (C,G), (D,H), (C,B), (B,A), (A,E)

Summary of the Prim's Algorithm

Sets T (vertex set) and U (edge set) are maintained throughout this algorithm

1. First any node in the graph is selected and added to T
2. At every iteration of this algorithm, an edge with minimal weight that connects a node not in T to a node in T is added to the edge set U
3. The node in the newly added edge that is not in T is added to T
4. This is repeated until all vertices in G are added to T

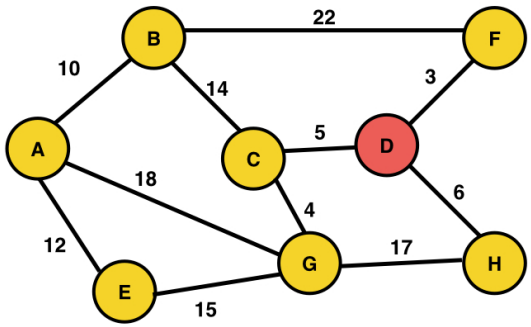

T: D

U:

Table of Contents

1. Introduction
2. Graph Definition
3. Graph Representations
4. Graph Applications
   - Graph Searching
   - Topological Ordering in a Graph
   - Supp: Shortest Paths in a Graph
   - Minimal Spanning Trees
   - Supp: Flow Networks
   - Supp: Four-Colour Problem
   - Supp: Hamiltonian Circuits and Travelling Salesman Problem

What are Flow Networks?

- In **flow networks**, substance originates at S (**source**) and is consumed at D (**destination**)
- Consider an oil pipeline network in which vertices are pumping stations and edges are pipelines
- Substance can flow through pipelines $e_{i,j}$ starting at S and reach D as long as the flow along each pipeline is within the flow capacity
- Weights on edges of a flow network depicts the current flow $f_{i,j}$ and the capacity $c_{i,j}$ of the edge and is labelled as $f_{i,j}/c_{i,j}$
- What is the **maximum** flow possible throughout the flow network starting from a **source** to a **destination**?

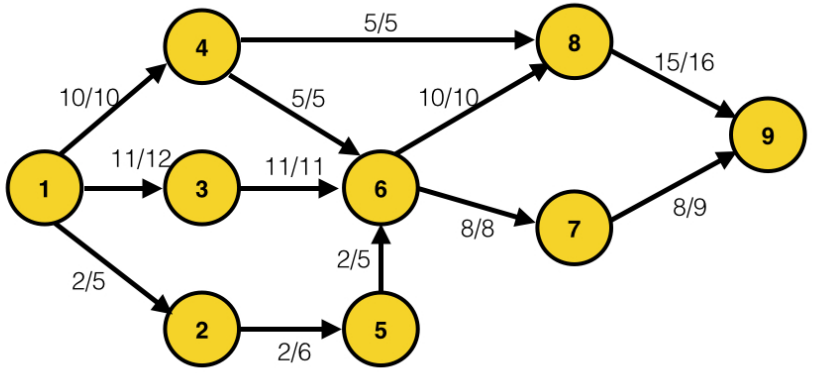

Constraints on a Flow Network

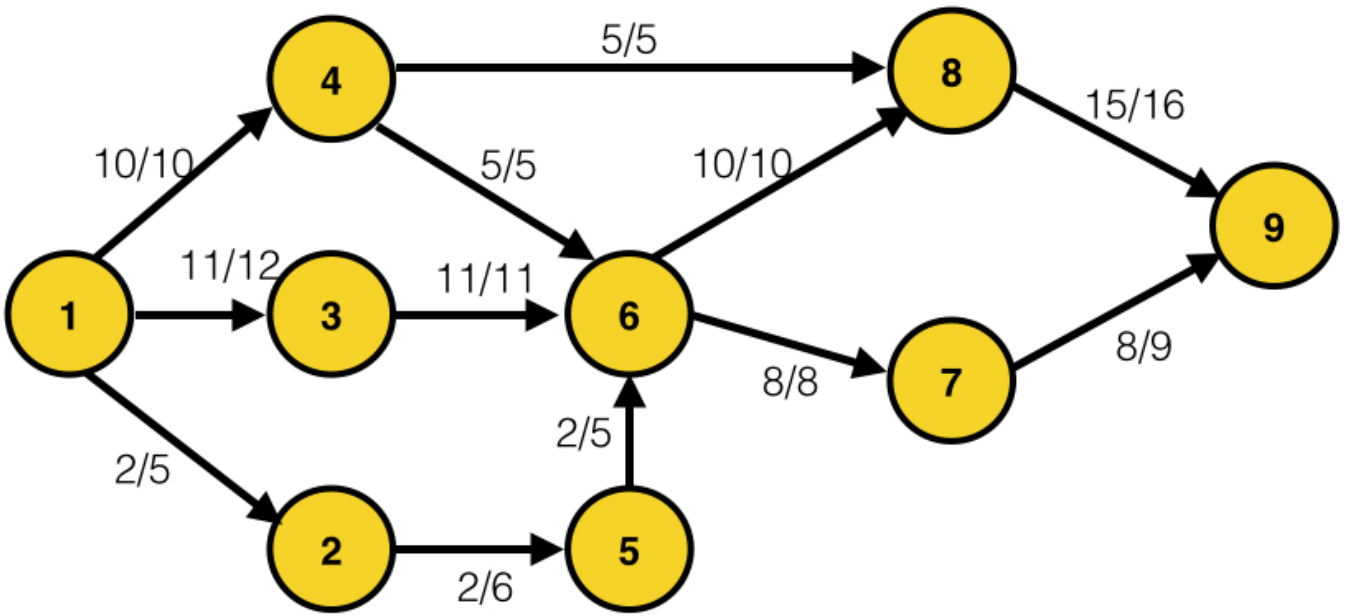

Flow Constraints: $0 \leq f_{i,j} \leq c_{i,j} \; \forall i, j \in V$

Flow Conservation: $\sum_{i \in V} f_{i,j} = \sum_{i \in V} f_{j,i} \forall j \in \{V / \; s, d\}$

Back Flow: $0 \leq f_{j,i} \leq f_{i,j}$

Ford-Fulkerson Algorithm

Find an **augmenting path** from S-D

- Path in which **positive flow** can be added to edges that connect S-D i.e. no edges have reached full capacity
- **Breadth-first** path finding algorithm (shortest path from S-D with space to augment)

1. **Increment** flow on all edges in the path by the same value which heeds flow constraints on these edges
2. Repeat until no more augmenting path exists

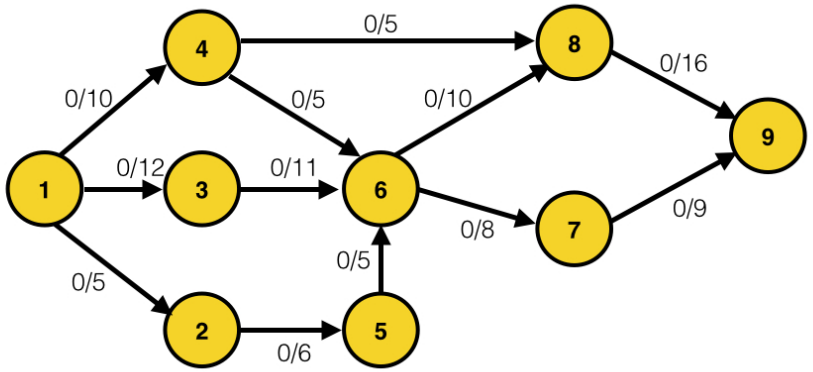

Ford-Fulkerson Algorithm in Action

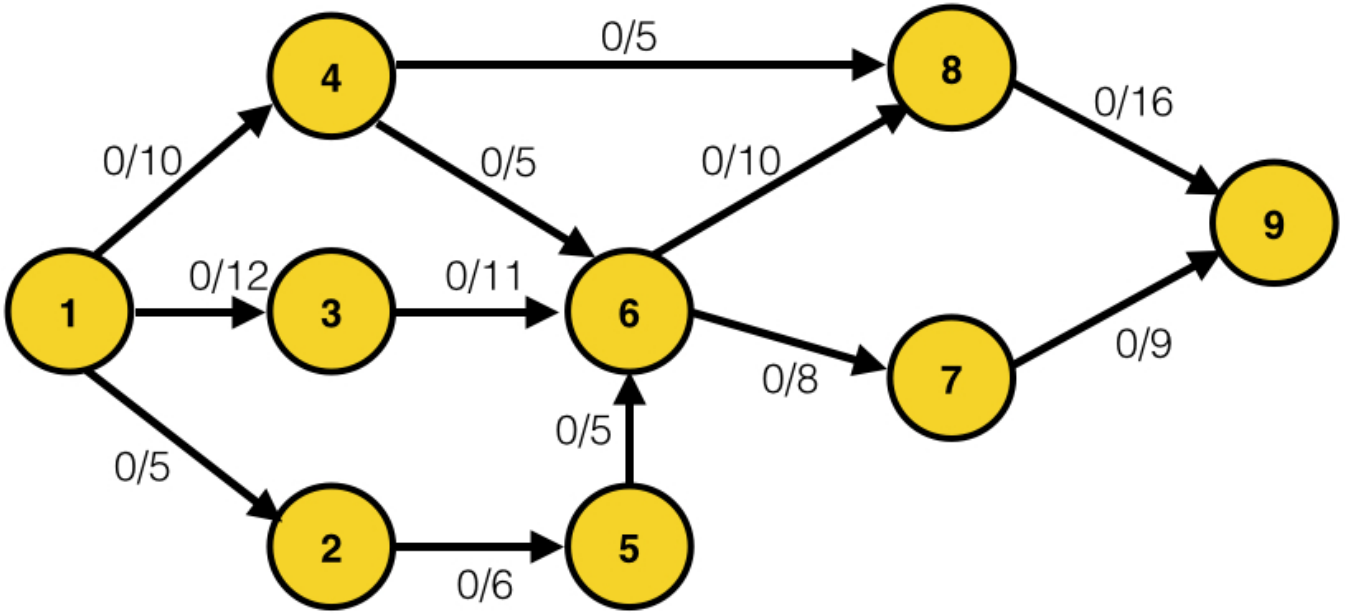

Ford-Fulkerson Algorithm in Action

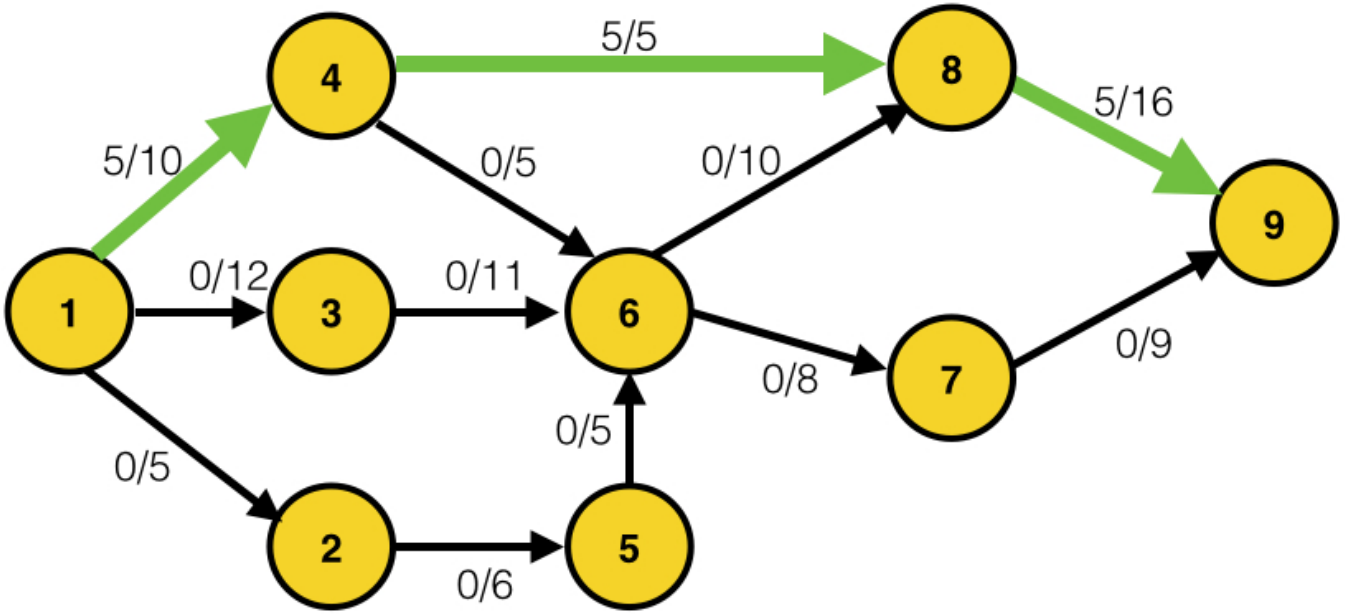

Ford-Fulkerson Algorithm in Action

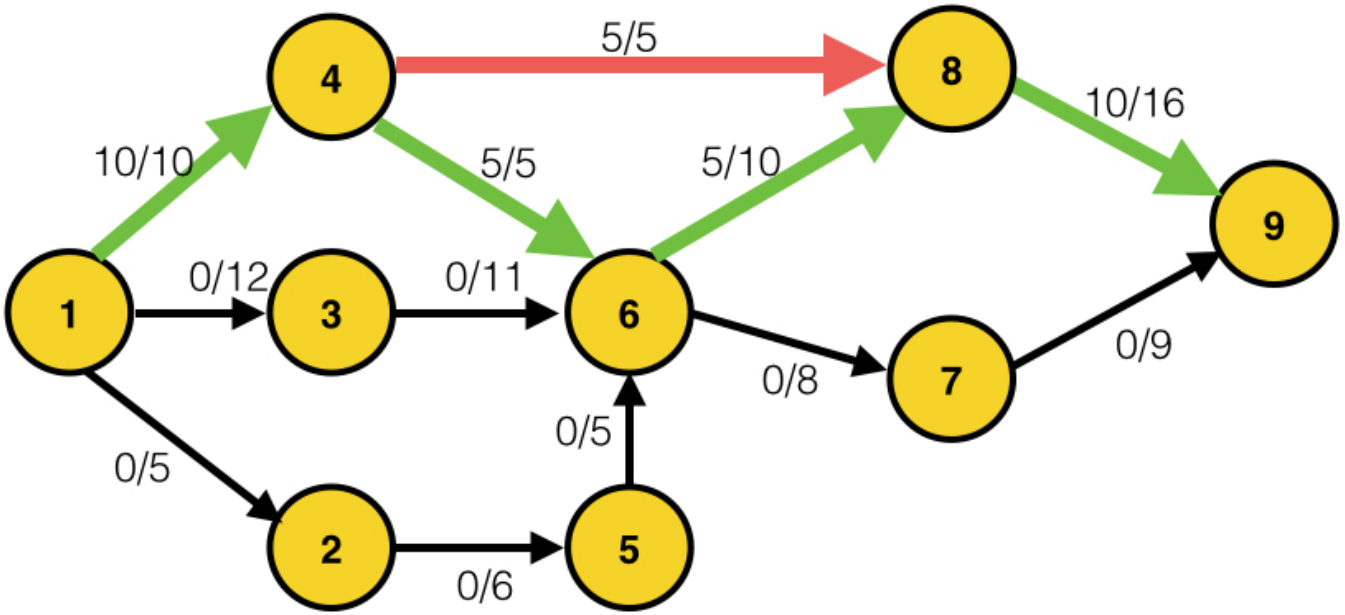

Ford-Fulkerson Algorithm in Action

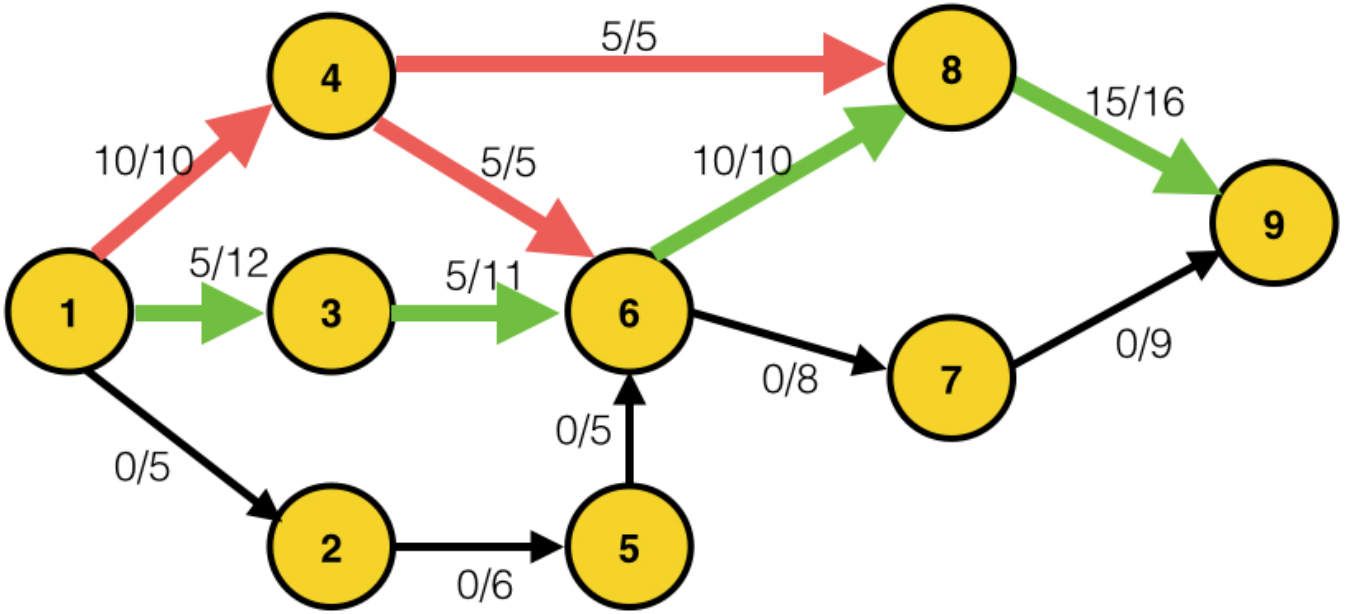

Ford-Fulkerson Algorithm in Action

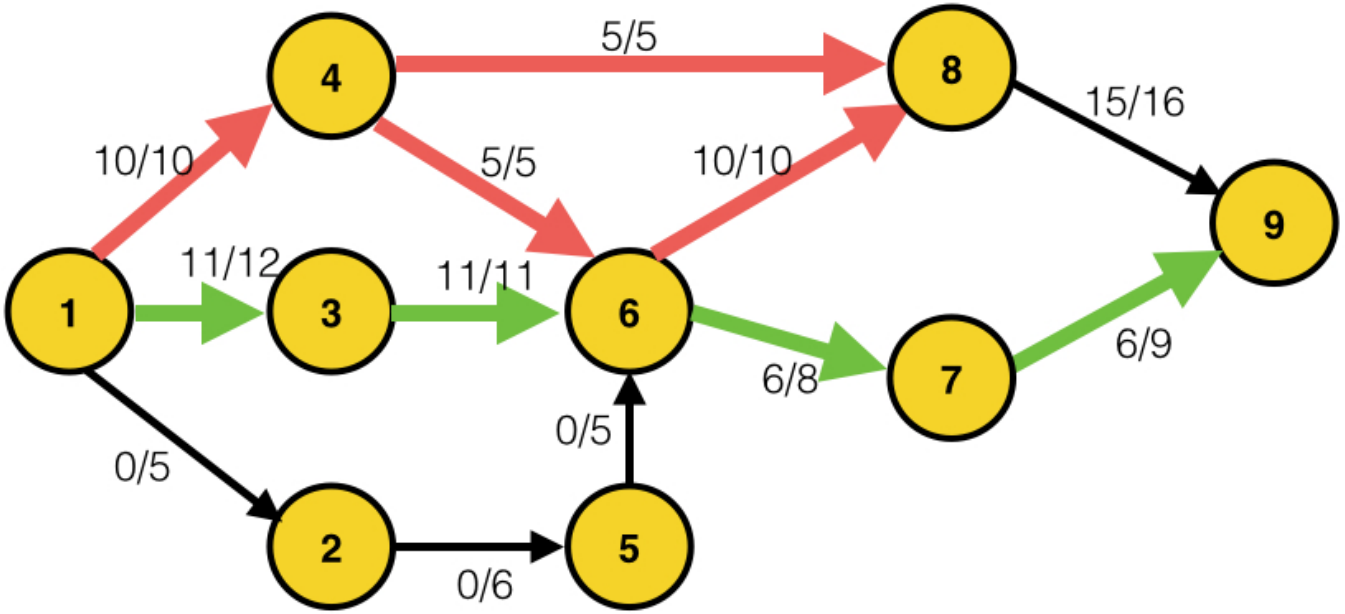

Ford-Fulkerson Algorithm in Action

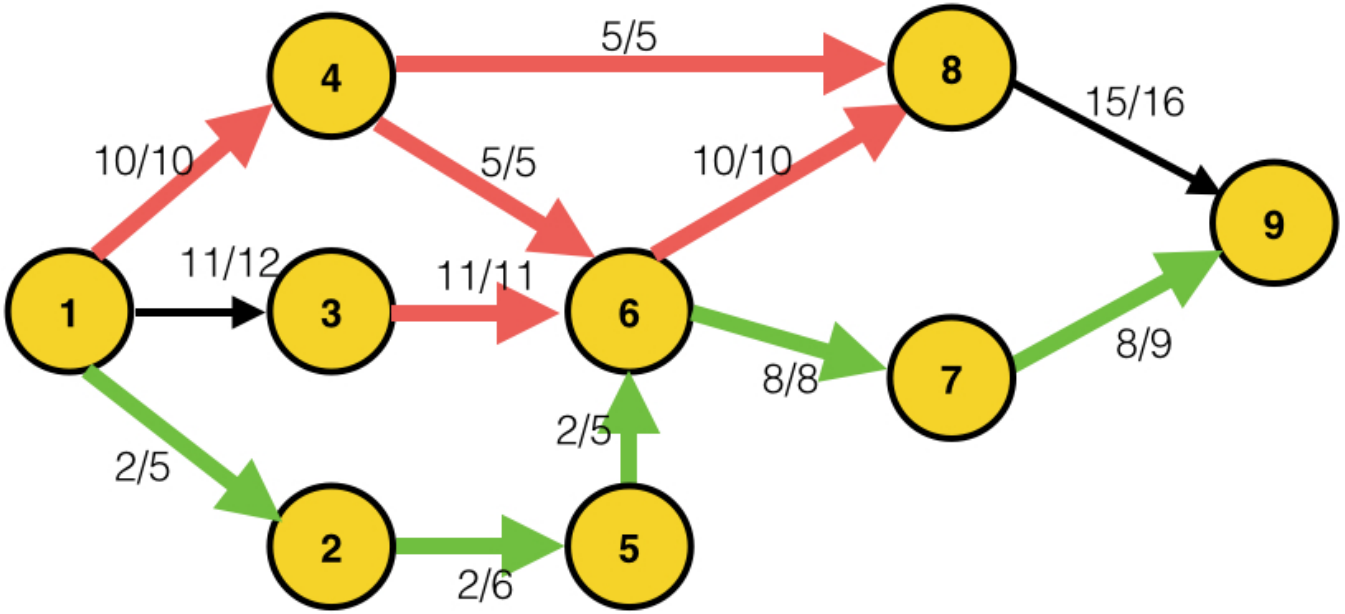

Ford-Fulkerson Algorithm in Action

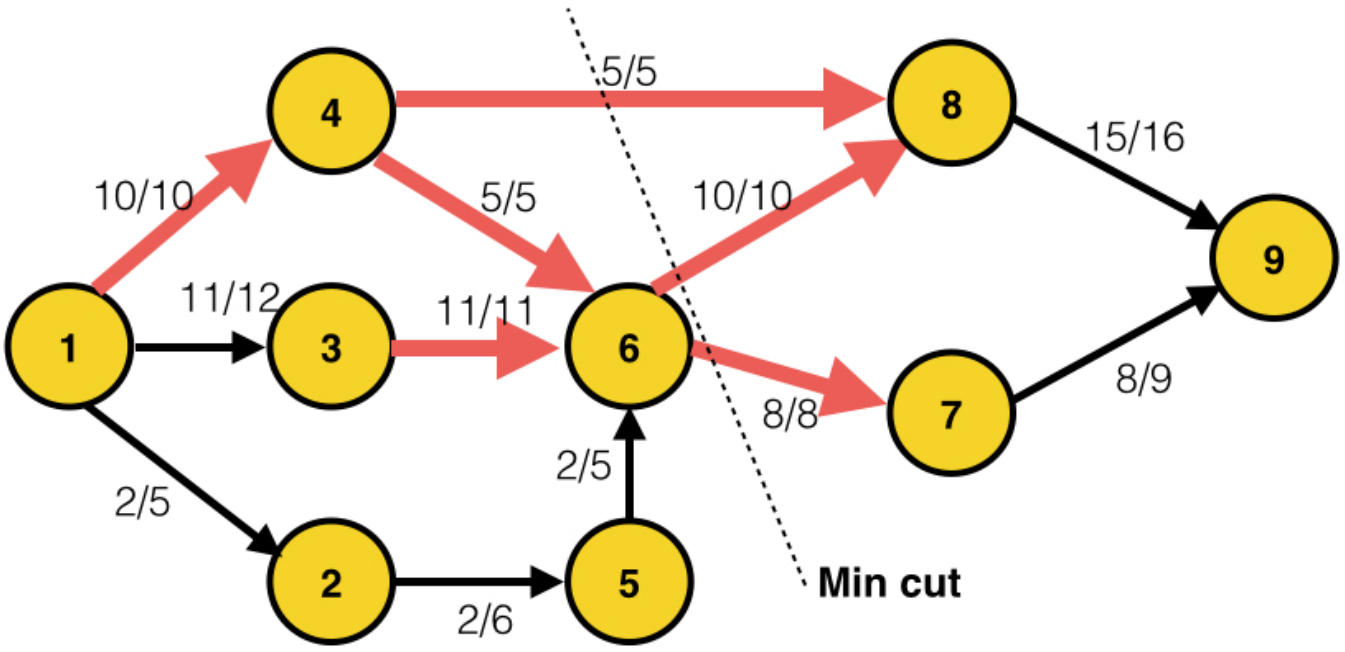

Max Flow: 23

Table of Contents

1. Introduction
2. Graph Definition
3. Graph Representations
4. Graph Applications
   - Graph Searching
   - Topological Ordering in a Graph
   - Supp: Shortest Paths in a Graph
   - Minimal Spanning Trees
   - Supp: Flow Networks
   - Supp: Four-Colour Problem
   - Supp: Hamiltonian Circuits and Travelling Salesman Problem

Proper Colouring in Graph

- **Proper colouring** refers to the colouring of vertices in a graph in which no vertices of the same colour are connected by an edge
- The **graph colouring** problem examines the minimum number of colours required to achieve proper colouring
  - If the minimum number of colours required to colour a graph is k, then the graph is called **k-colorable**
- **Four-colouring** is used typically by cartographers to colour countries that are adjacent to one another with different colours belonging to a four colour set
- Intuitively obvious but a formal proof took many years to achieve
- The run-time of the algorithm required to solve this problem is exponential (i.e. NP-complete)

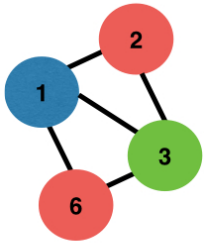

Example: Four-colour Problem

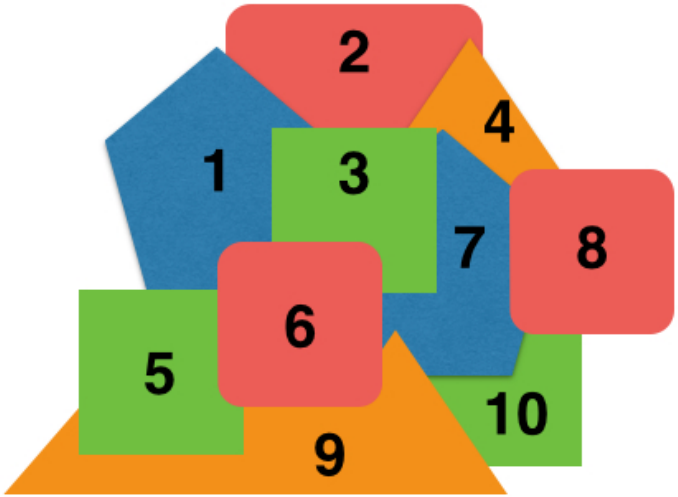

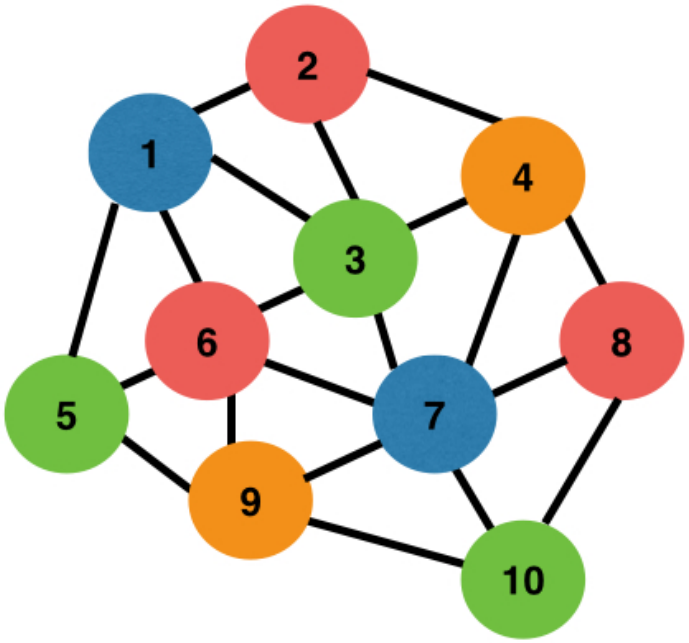

Can convert a map into a planar graph where each city is a vertex and if two cities are adjacent, these are connected by an edge

Table of Contents

1. Introduction
2. Graph Definition
3. Graph Representations
4. Graph Applications
   - Graph Searching
   - Topological Ordering in a Graph
   - Supp: Shortest Paths in a Graph
   - Minimal Spanning Trees
   - Supp: Flow Networks
   - Supp: Four-Colour Problem
   - Supp: Hamiltonian Circuits and Travelling Salesman Problem

Hamiltonian Circuit Problem

- This is a **decision problem** that examines whether it is possible find a path that visits every vertex in the graph only once before returning to the starting vertex
- This is referred to as the **Hamiltonian cycle**
- What is the complexity of finding a solution to this problem?
- Can use the theory of **satisfiability** (beyond the scope of this course) or **translate** the problem to a well-known problem for which complexity is already established
- We shall try to translate the problem to the travelling salesman problem

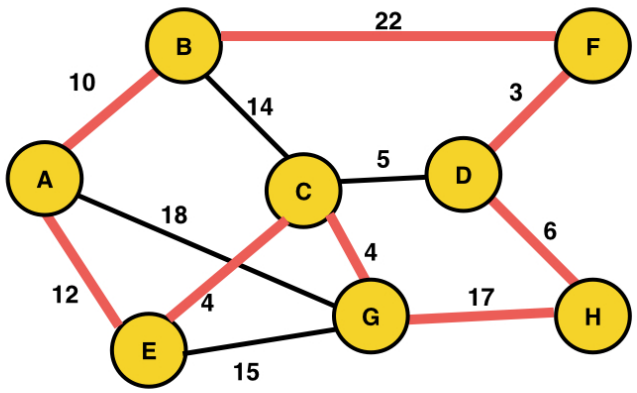

Side Note: NP vs NP-Hard vs NP-Complete

- **P**: Problems can be solved in polynomial time
- **NP**: If the solution to the problem can be verified in polynomial time
- **Reducible**: If a problem A can be translated into problem B with a polynomial time reduction algorithm R
- **NP-Hard**: If any NP problems can be reduced to the NP problem B (this is at least as difficult all difficult problems can get)
  - If a problem A is in NP and it is reducible to problem B (i.e. $B \leq_p A$) in polynomial time

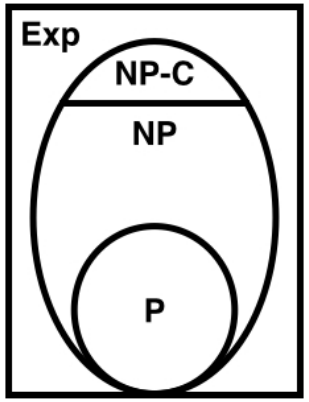

One Version of the Travelling Salesman Problem

- The **travelling salesman problem** is a well-know problem that has many varieties
- The one we will consider here is: find a path in which a salesman can visit every city once and end up at the starting city with cost less than k
- It can be shown via Cook's theorem that the Travelling Salesman Problem is NP-complete (need the notion of **satisfiability**)
- Many problems such as **Hamiltonian Circuit problem** can be shown to be NP-complete as these can be *reduced* to this version of Travelling Salesman problem

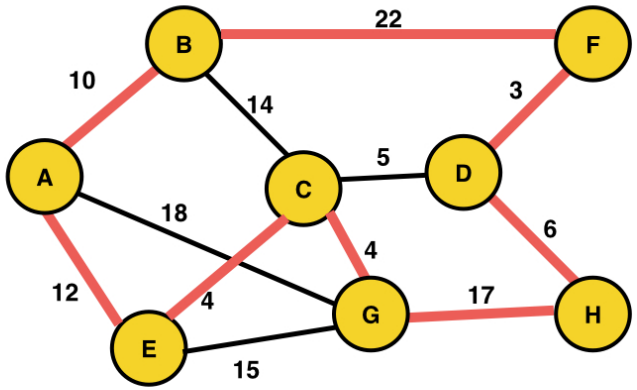

An example of Reduction

Converting hamilton circuit problem to TSP:
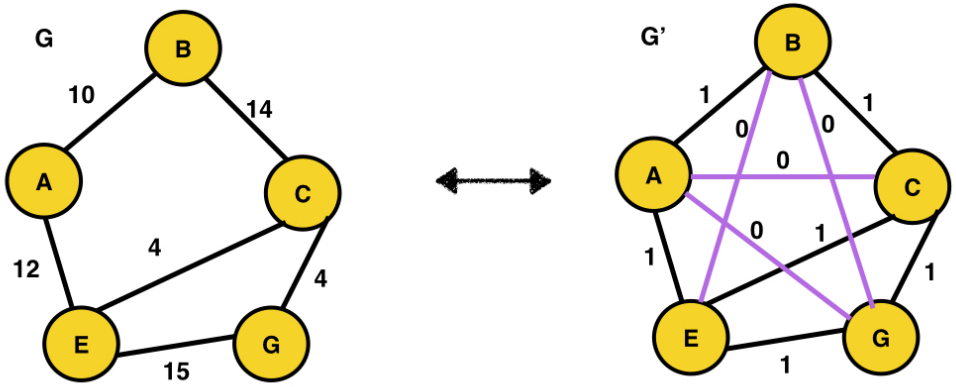
- Suppose that the hamilton circuit problem is defined for G
- Define G' which contains the same V as G in which there exists an edge for every pair of vertex in V
- There are more edges in G' than G
- Assign a weight of 1 to edges in G' that exist in G and the value of 2 to other edges
- Now pose the problem as a TSP with K=n
- This reduction is polynomial in complexity and therefore the Hamilton Circuit problem is NP-Complete!