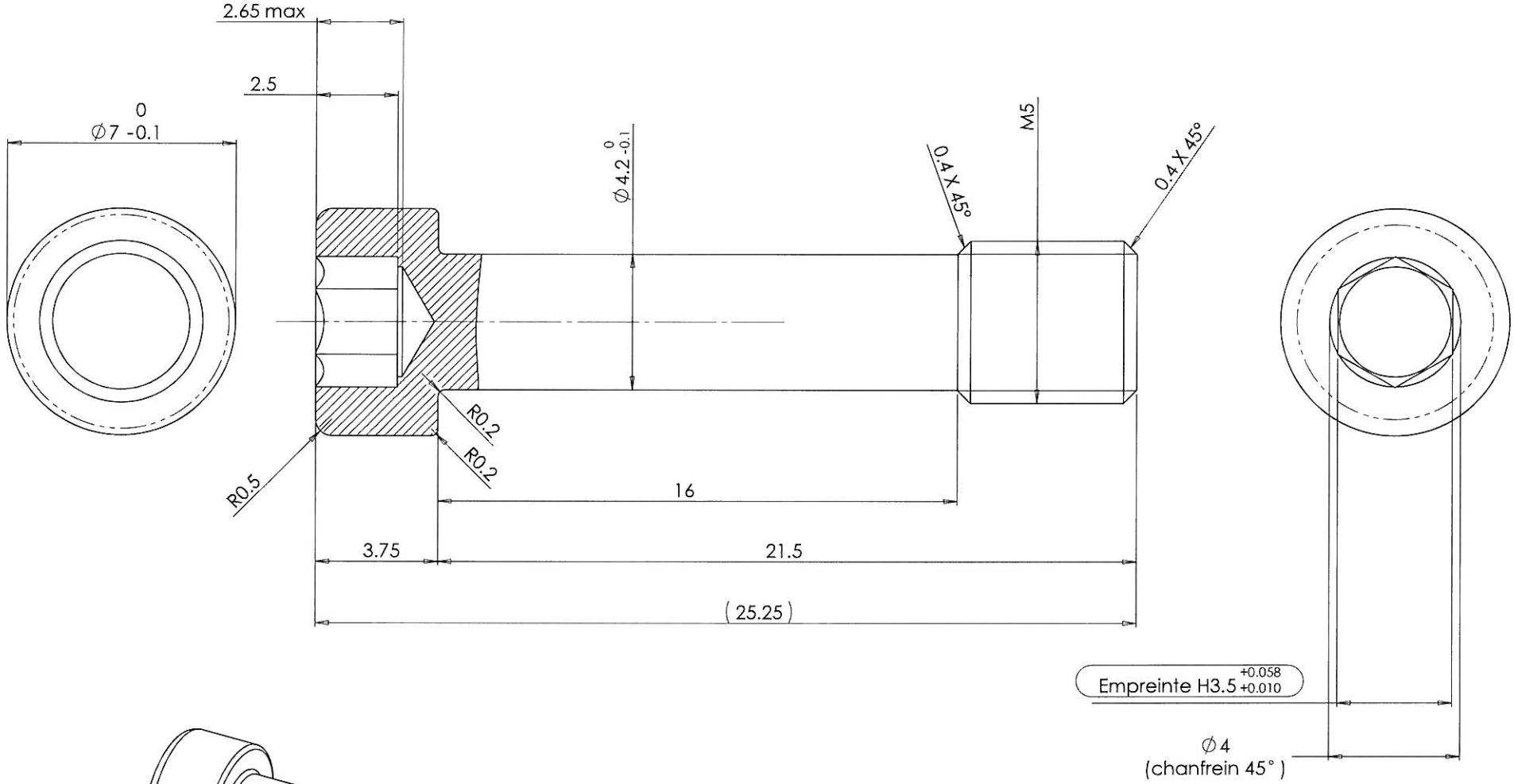

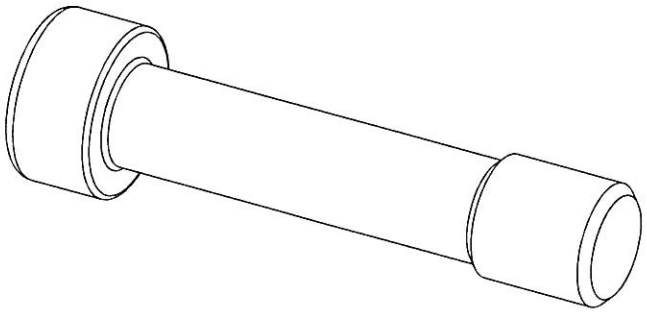

General Tol: ±0.1	Material: INOX 1.4542	Unitary control on the framed dimensions Controle unitaire pour les coles encadrees
Angular Tol: ±0.5°	Finishing: Durcissement structural 1h / 480 C	
Roughness: Ra1.6	Note: Piece proper et exempte de bavures	Drawn by: ATo. Date: 14/05/09
Scale: 8/1	Designation : Vis de serrage Varus/Valgus	Checked by: SCh Date: 10/08/09
PRAXIM	**Plan reference (Technical reference / index) : PRAXIM / MPLAN / 4145-2006 / 1.1**	A3 Folio: 1/1

this document is the exclusive property of PRAXIM and cannot be communicated, reproduced or be used without our written authorization