NATURE DE LA REVISION	STATUT DE LA REVISION			
	realise par	verifie par	Date	indice
creation	FCI	DVe	20/06/08	2.0
Revision following FINCID 08/052				2.2
FMDSPEC 09-003				2.3
FMDSPEC 09-003				2.5

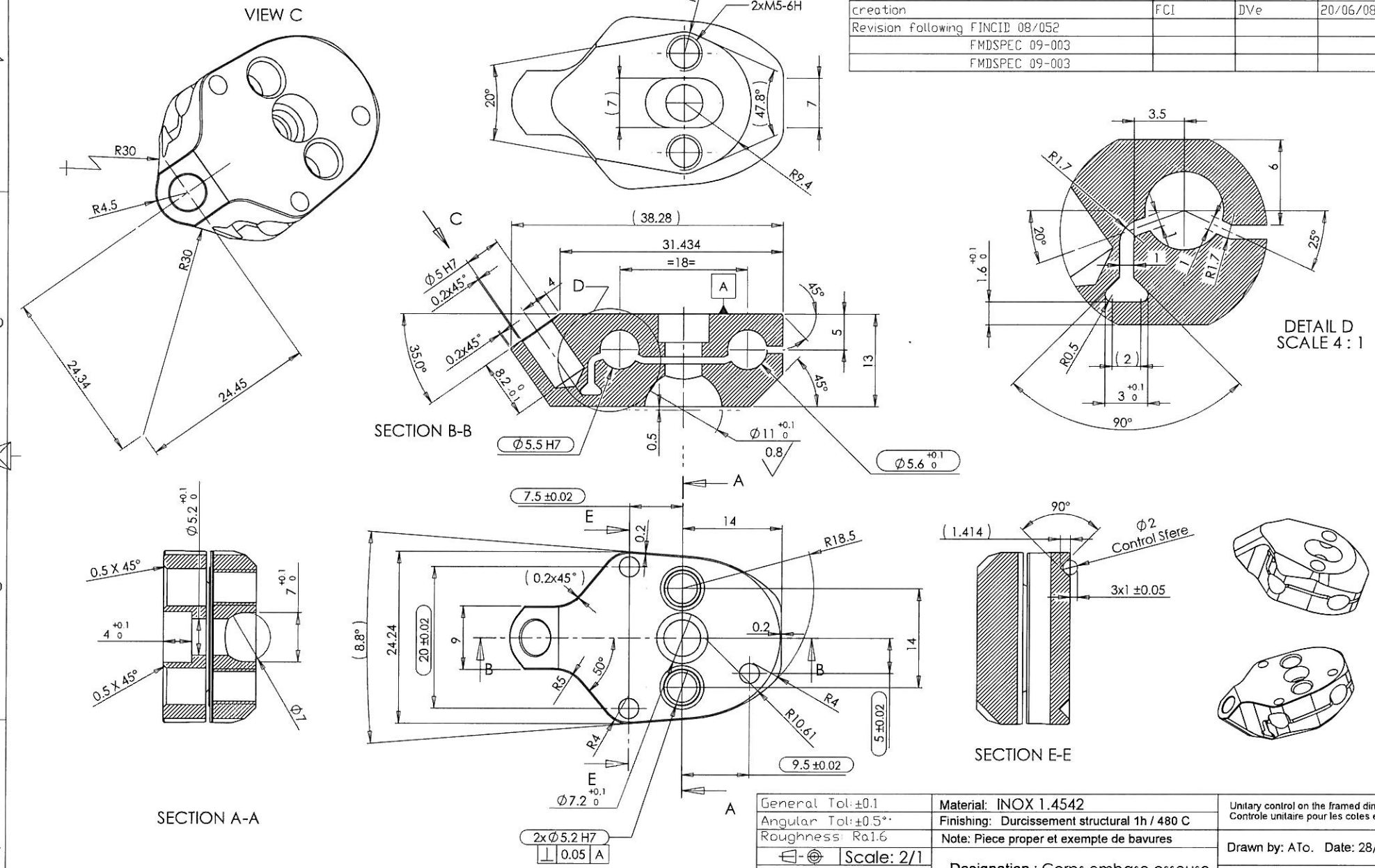

General Tol: ±0.1	Material: INOX 1.4542	Unitary control on the framed dimensions Controle unitaire pour les coles encadrees
Angular Tol: ±0.5°·	Finishing: Durcissement structural 1h / 480 C	
Roughness: Ra1.6	Note: Piece proper et exempte de bavures	Drawn by: ATo. Date: 28/08/09
Scale: 2/1	Designation : Corps embase osseuse	Checked by: SCh Date: 10/09/09
PRAXIM	**Plan reference (Technical reference / index) : PRAXIM / MPLAN / 4145-1001 / 2.5**	A3 Folio: 1/1

this document is the exclusive property of PRAXIM and cannot be communicated, reproduced or be used without our written authorization