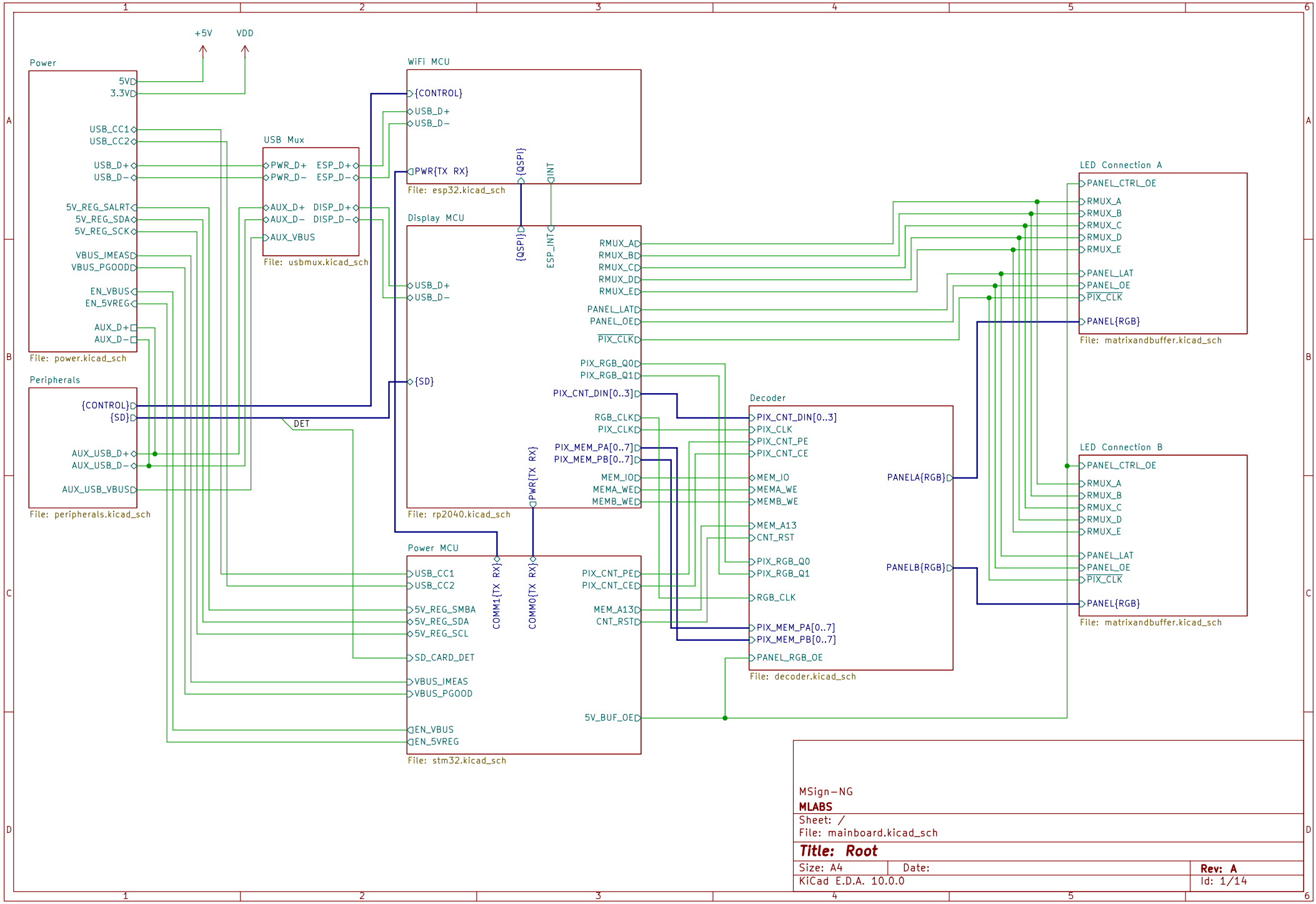

MSign−NG
MLABS
Sheet: /
File: mainboard.kicad_sch

Title: Root

Size: A4	Date:	**Rev: A**
KiCad E.D.A. 10.0.0		Id: 1/14

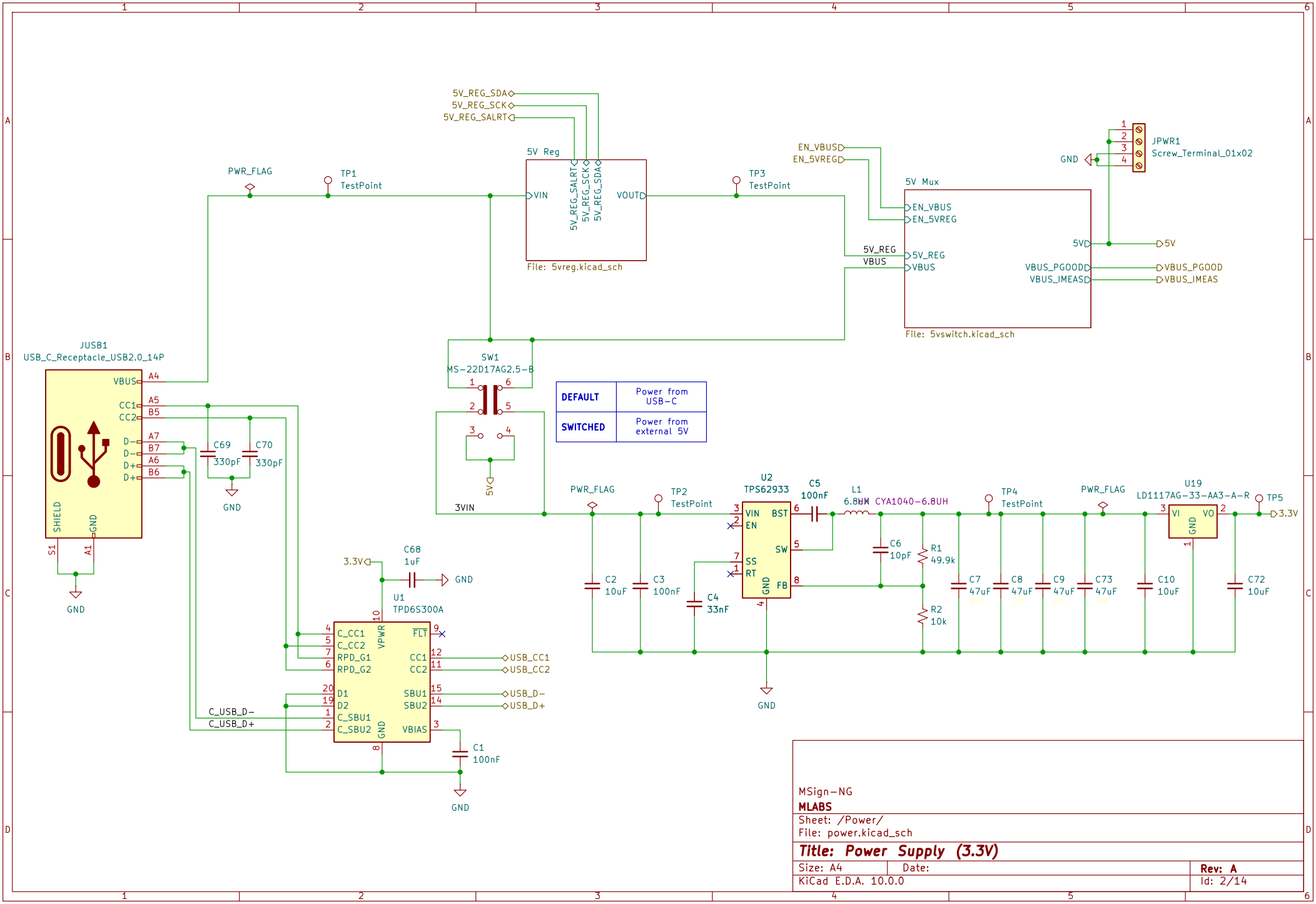

MSign-NG
MLABS
Sheet: /Power/
File: power.kicad_sch

Title: Power Supply (3.3V)

Size: A4	Date:	**Rev: A**
KiCad E.D.A. 10.0.0		Id: 2/14

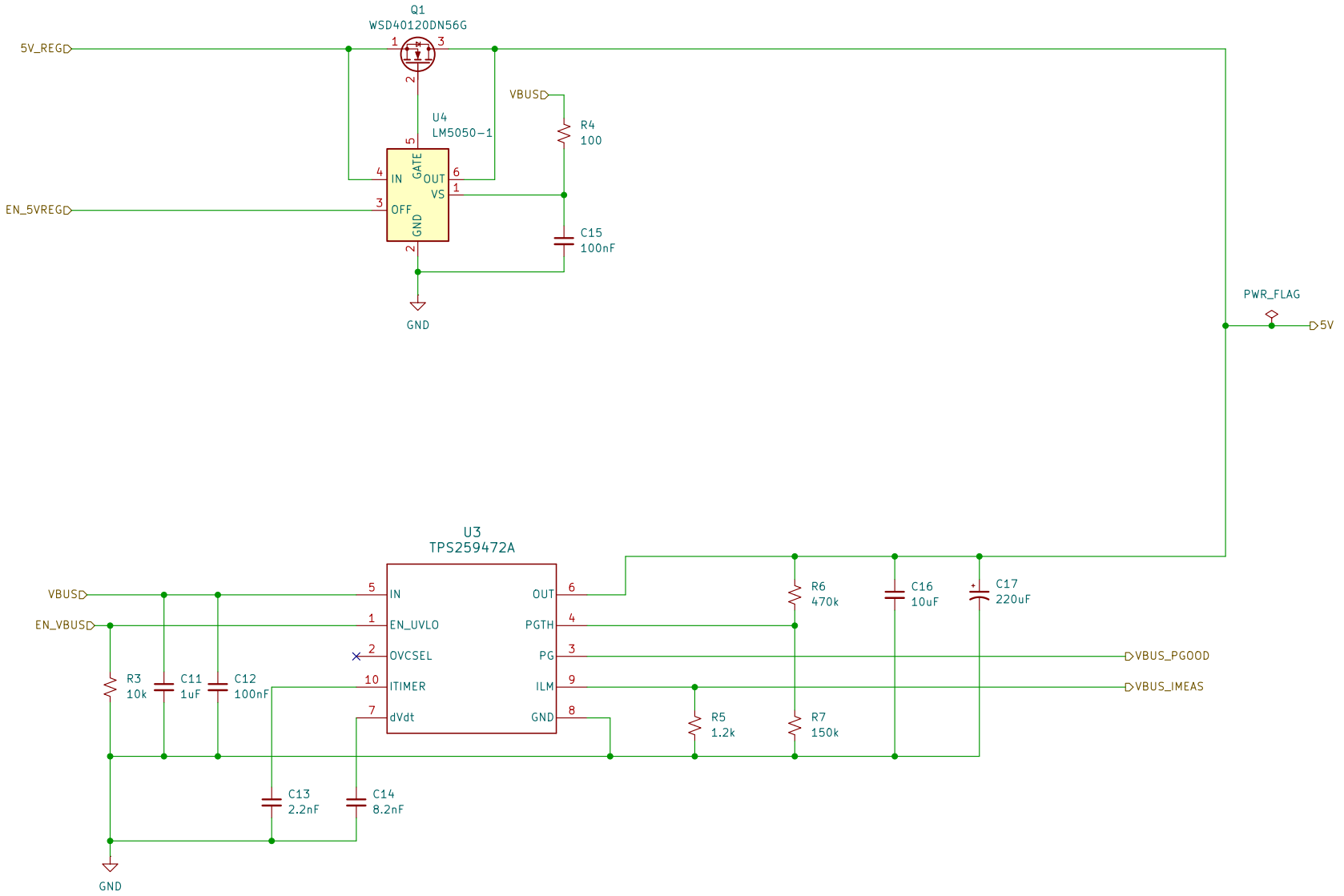

MSign-NG
MLABS
Sheet: /Power/5V Mux/
File: 5vswitch.kicad_sch

Title: 5V Multiplexer

Size: A4	Date:	**Rev: A**
KiCad E.D.A. 10.0.0		Id: 3/14

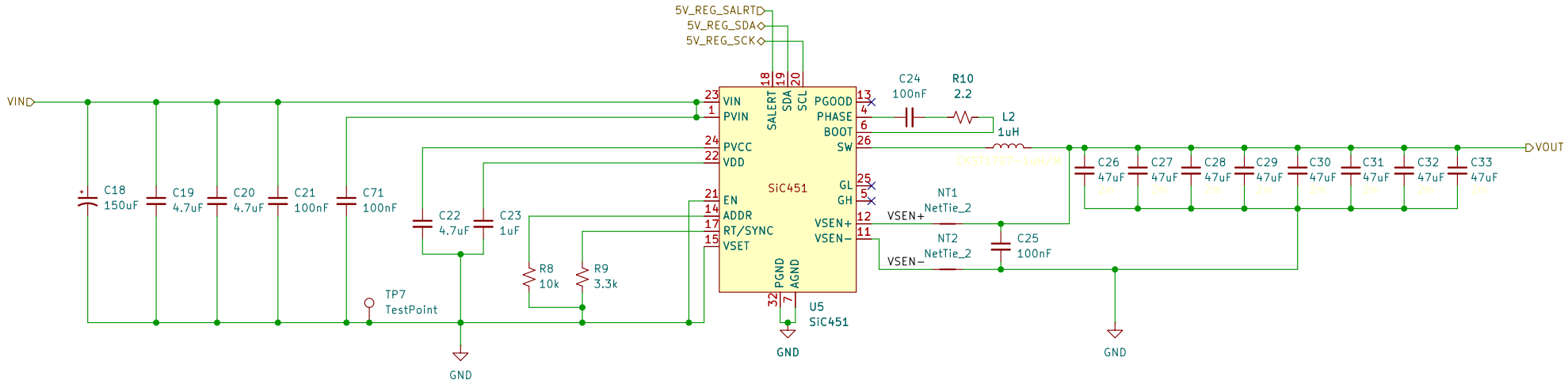

MSign-NG
MLABS
Sheet: /Power/5V Reg/
File: 5vreg.kicad_sch

Title: USB PD 5V Regulator

Size: A4	Date:	**Rev: A**
KiCad E.D.A. 10.0.0		Id: 4/14

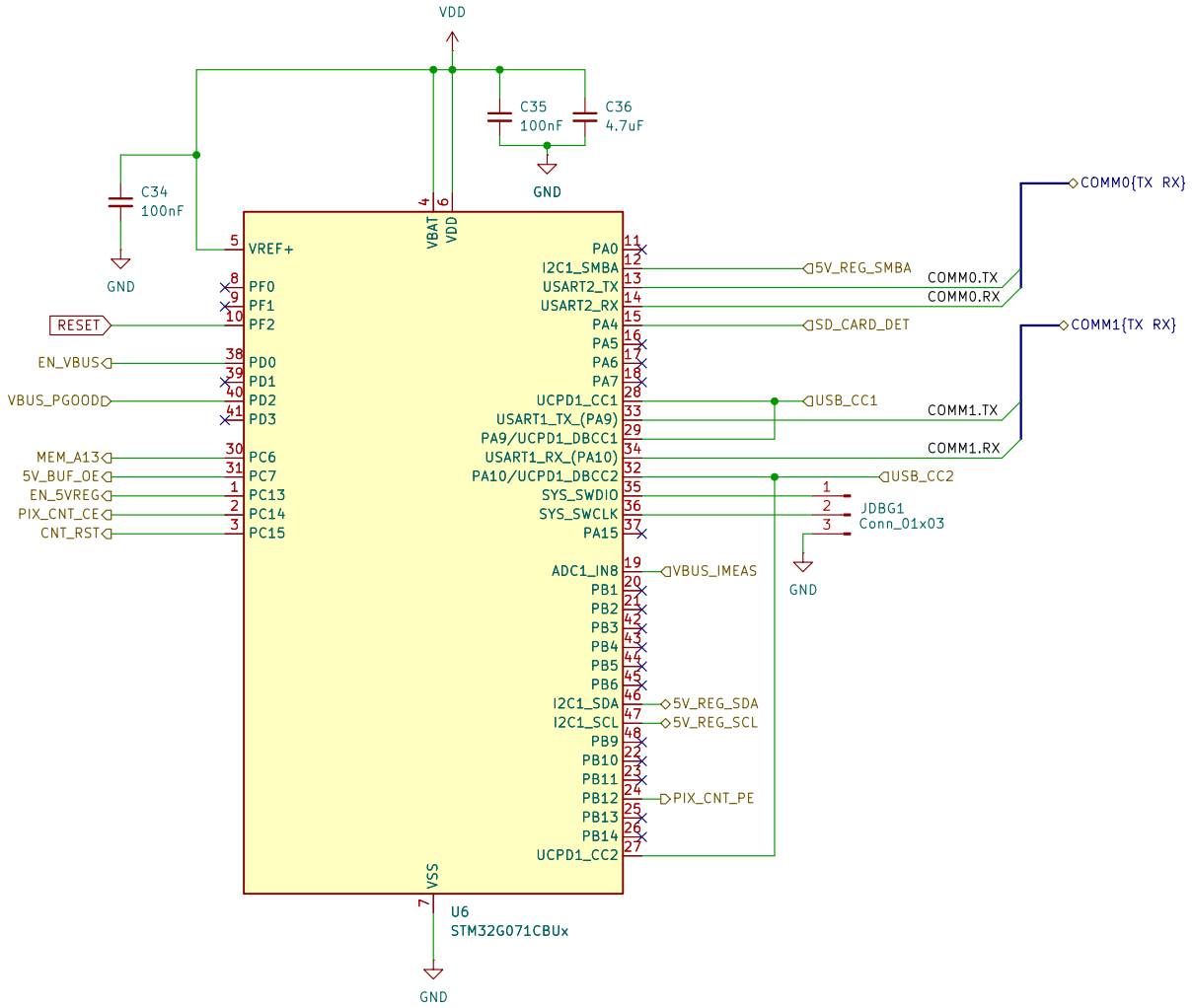

MSign-NG
MLABS
Sheet: /Power MCU/
File: stm32.kicad_sch

Title: Power Supply (+aux Decoder IO) Microcontroller

Size: A4	Date:	**Rev: A**
KiCad E.D.A. 10.0.0		Id: 5/14

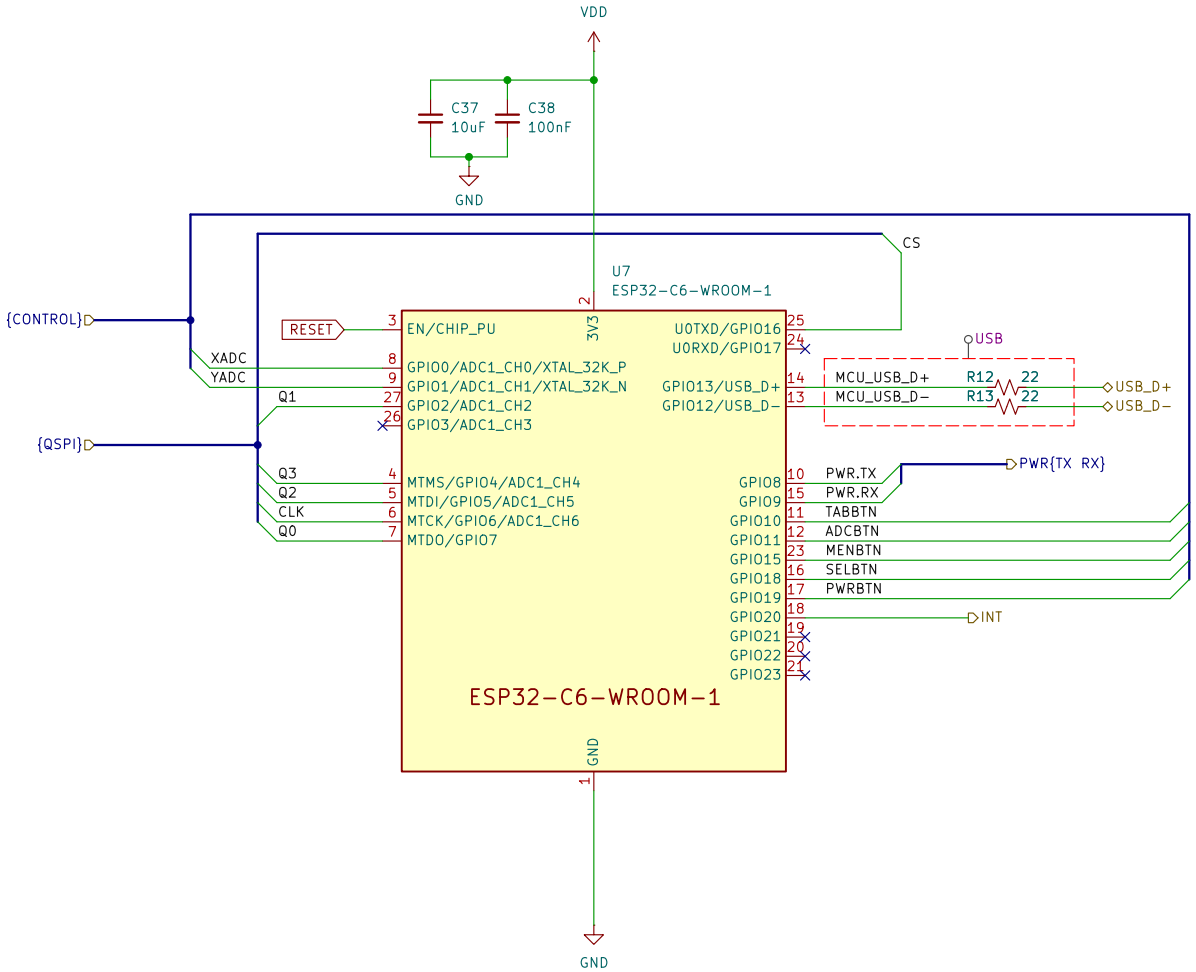

MSign-NG
MLABS
Sheet: /WiFi MCU/
File: esp32.kicad_sch

Title: WiFi Microcontroller

Size: A4	Date:	**Rev: A**
KiCad E.D.A. 10.0.0		Id: 6/14

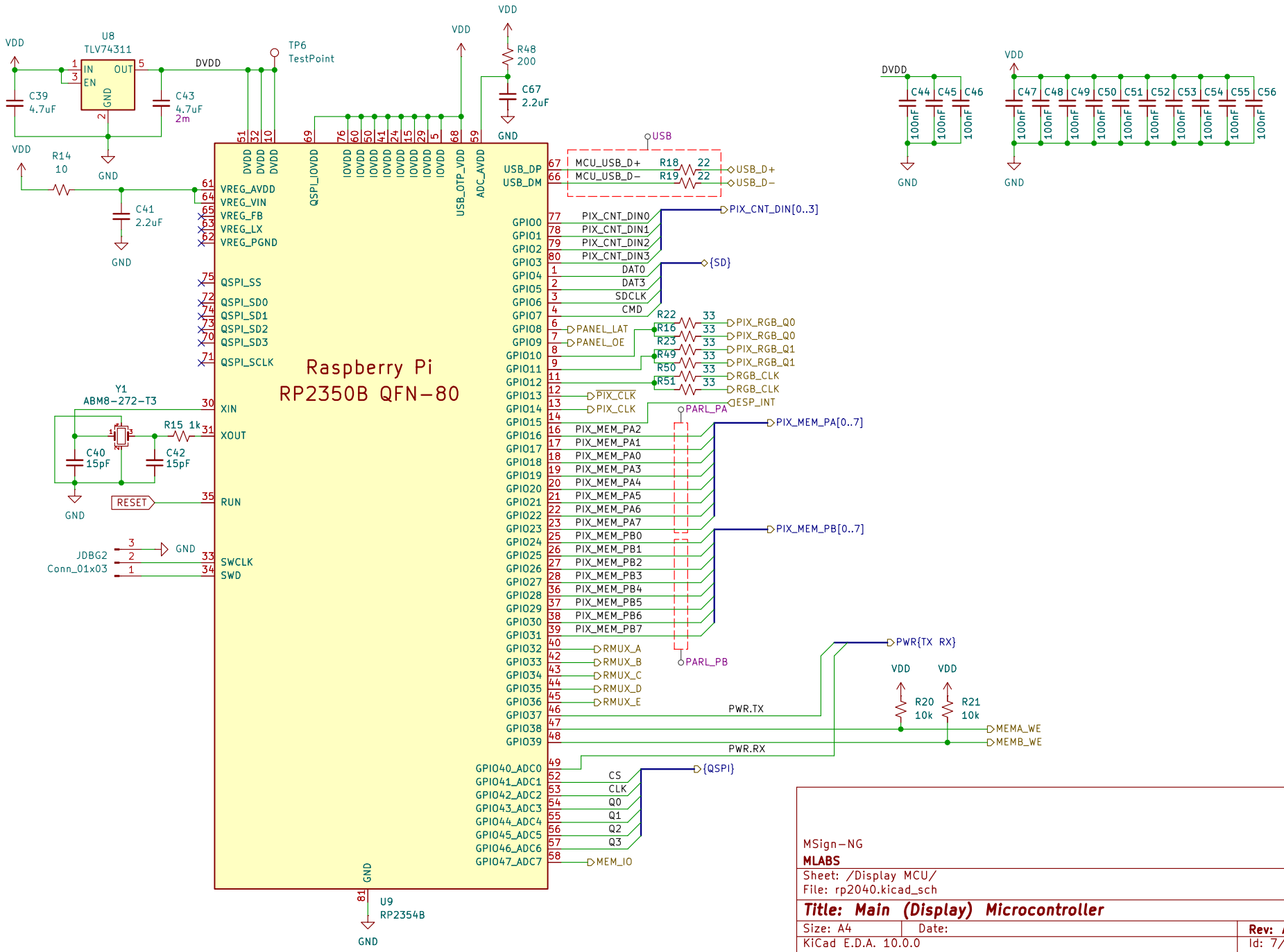

MSign-NG
MLABS
Sheet: /Display MCU/
File: rp2040.kicad_sch

Title: Main (Display) Microcontroller

Size: A4	Date:	Rev: A
KiCad E.D.A. 10.0.0		Id: 7/14

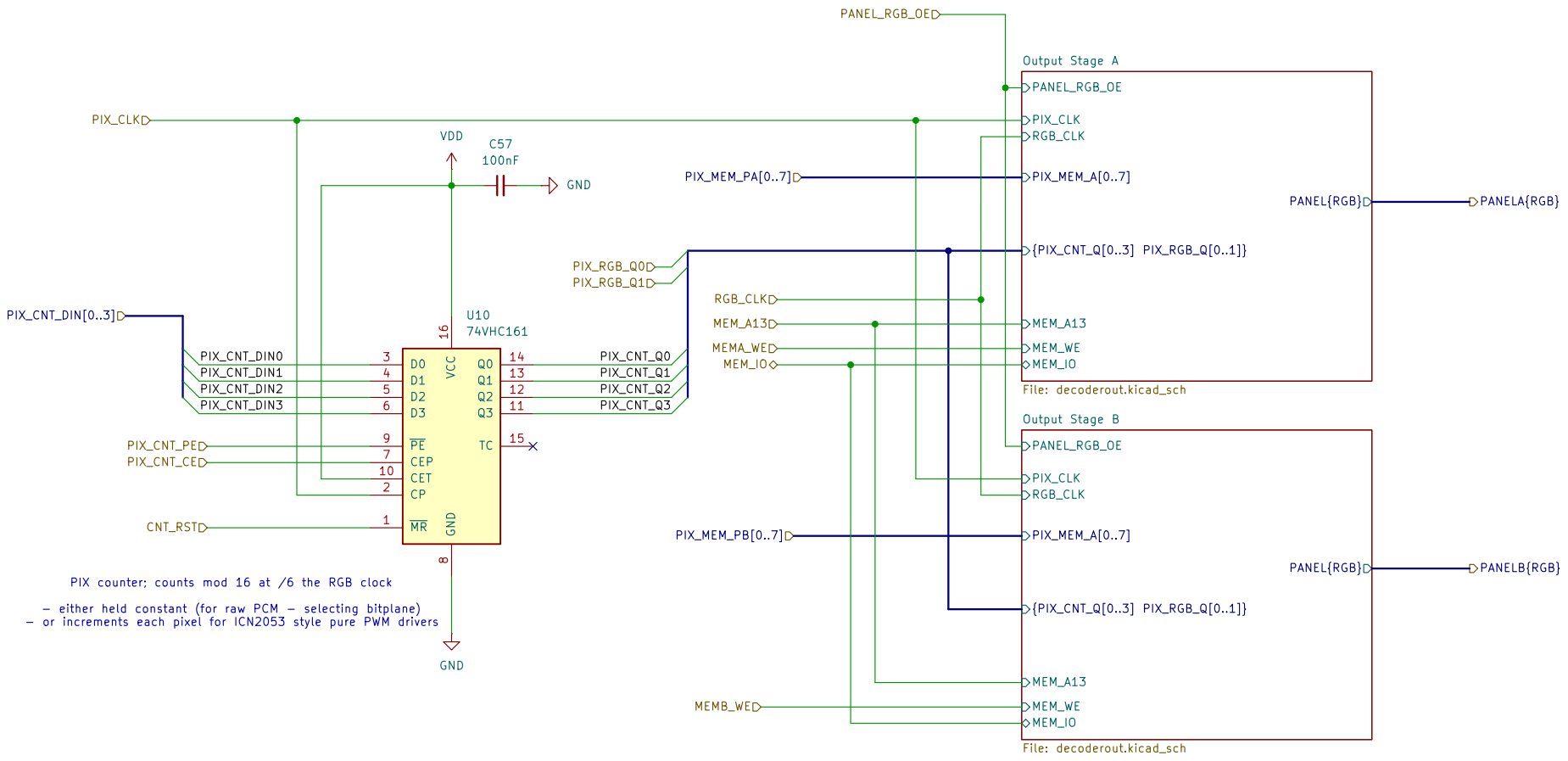

MSign–NG
MLABS
Sheet: /Decoder/
File: decoder.kicad_sch

Title: LED Bitstream Generator (common half)

Size: A4	Date:	**Rev: A**
KiCad E.D.A. 10.0.0		Id: 8/14

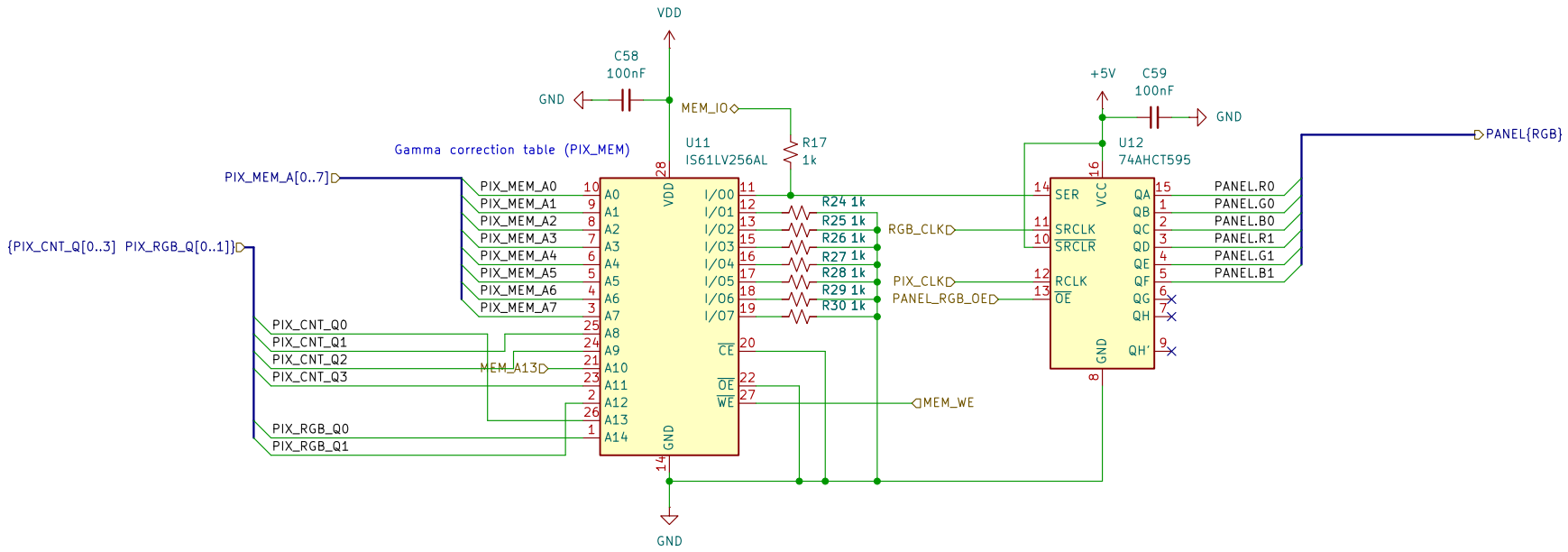

MSign-NG

MLABS

Sheet: /Decoder/Output Stage A/

File: decoderout.kicad_sch

Title: LED Bitstream Generator (gamma LUT + shifter)

Size: A4	Date:	**Rev: A**
KiCad E.D.A. 10.0.0		Id: 9/14

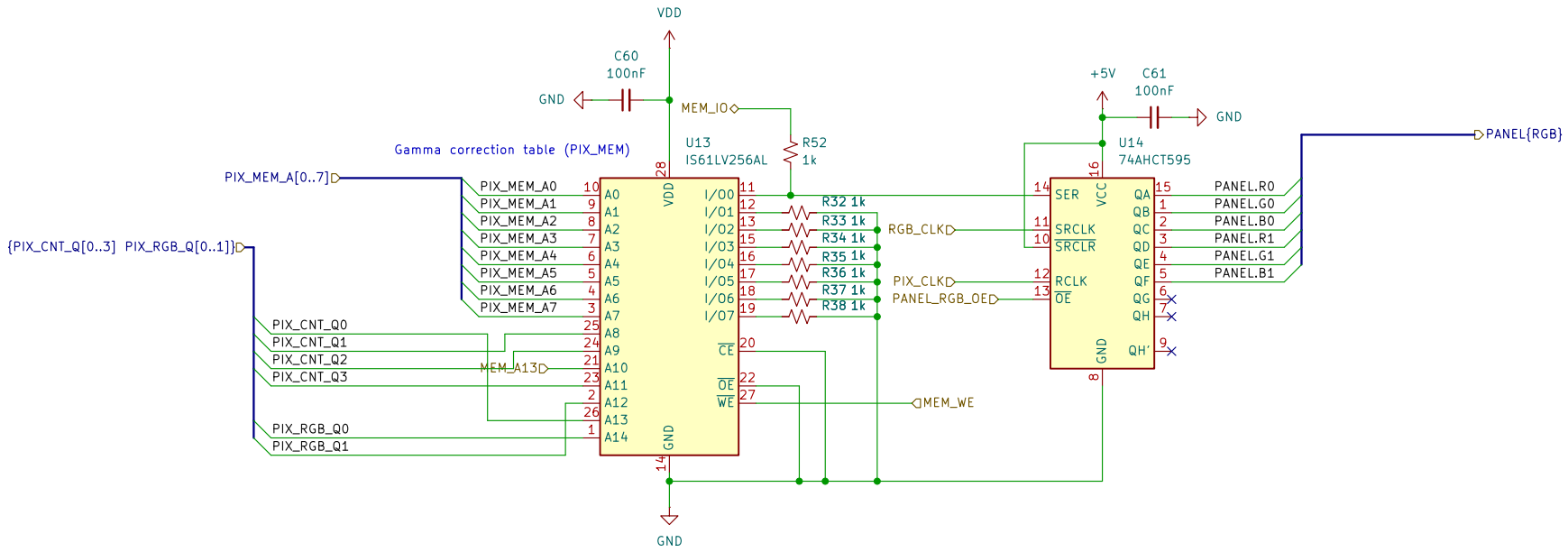

MSign-NG

MLABS

Sheet: /Decoder/Output Stage B/

File: decoderout.kicad_sch

Title: LED Bitstream Generator (gamma LUT + shifter)

Size: A4	Date:	**Rev: A**
KiCad E.D.A. 10.0.0		Id: 10/14

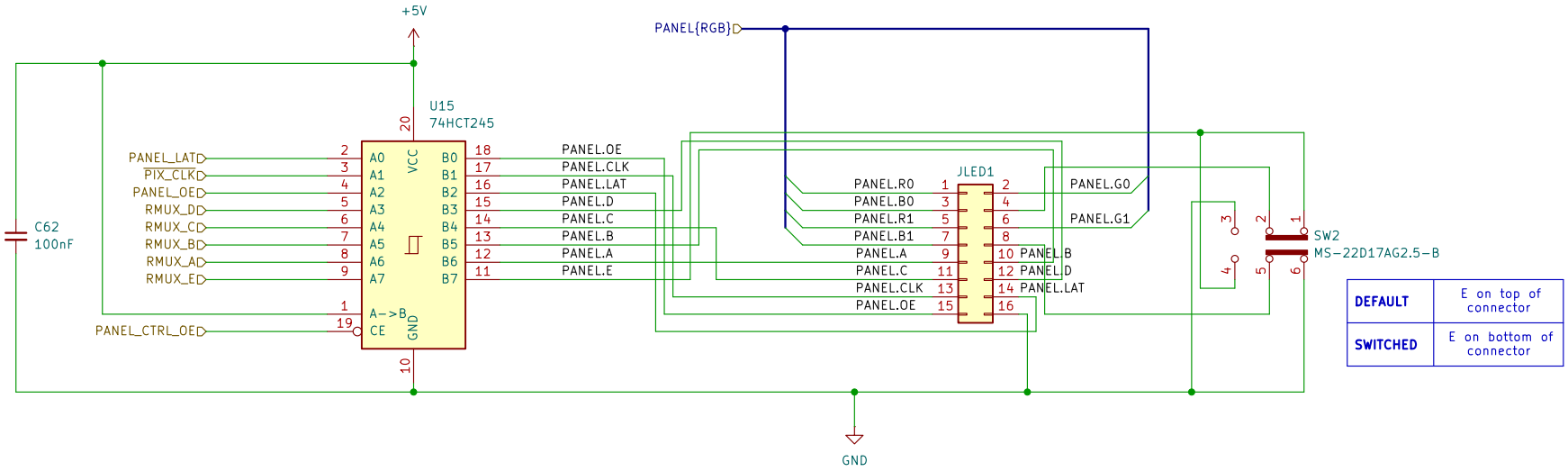

DEFAULT	E on top of connector
SWITCHED	E on bottom of connector

MSign-NG

MLABS

Sheet: /LED Connection A/

File: matrixandbuffer.kicad_sch

Title: LED Level Shifter + Socket

Size: A4	Date:	**Rev: A**
KiCad E.D.A. 10.0.0		Id: 11/14

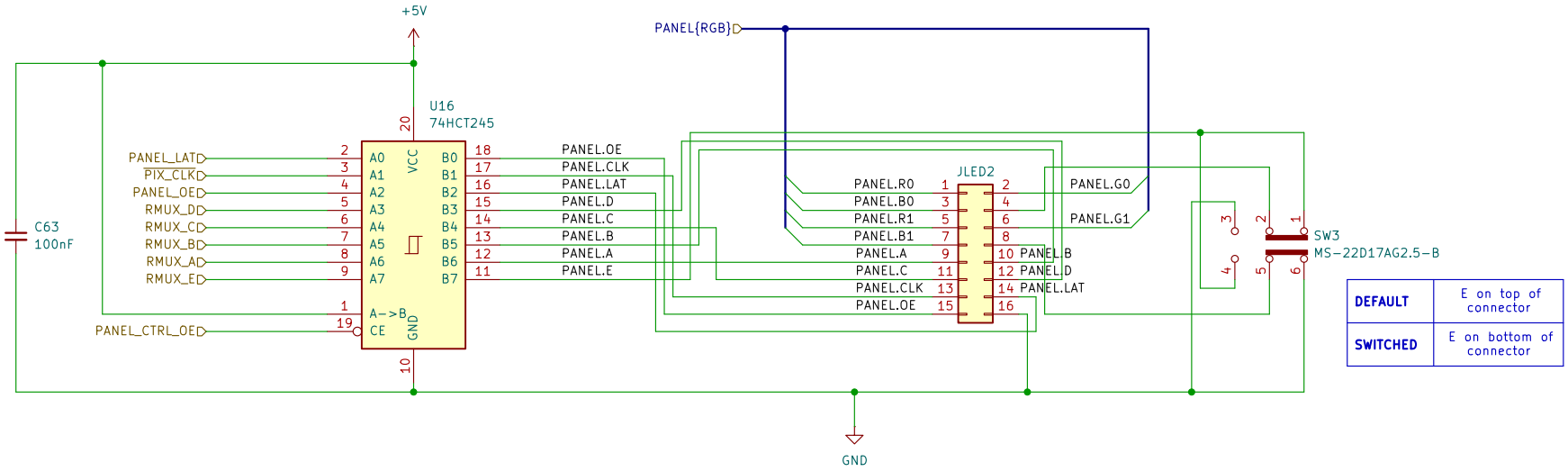

DEFAULT	E on top of connector
SWITCHED	E on bottom of connector

MSign-NG
MLABS
Sheet: /LED Connection B/
File: matrixandbuffer.kicad_sch

Title: LED Level Shifter + Socket

Size: A4	Date:	**Rev: A**
KiCad E.D.A. 10.0.0		Id: 12/14

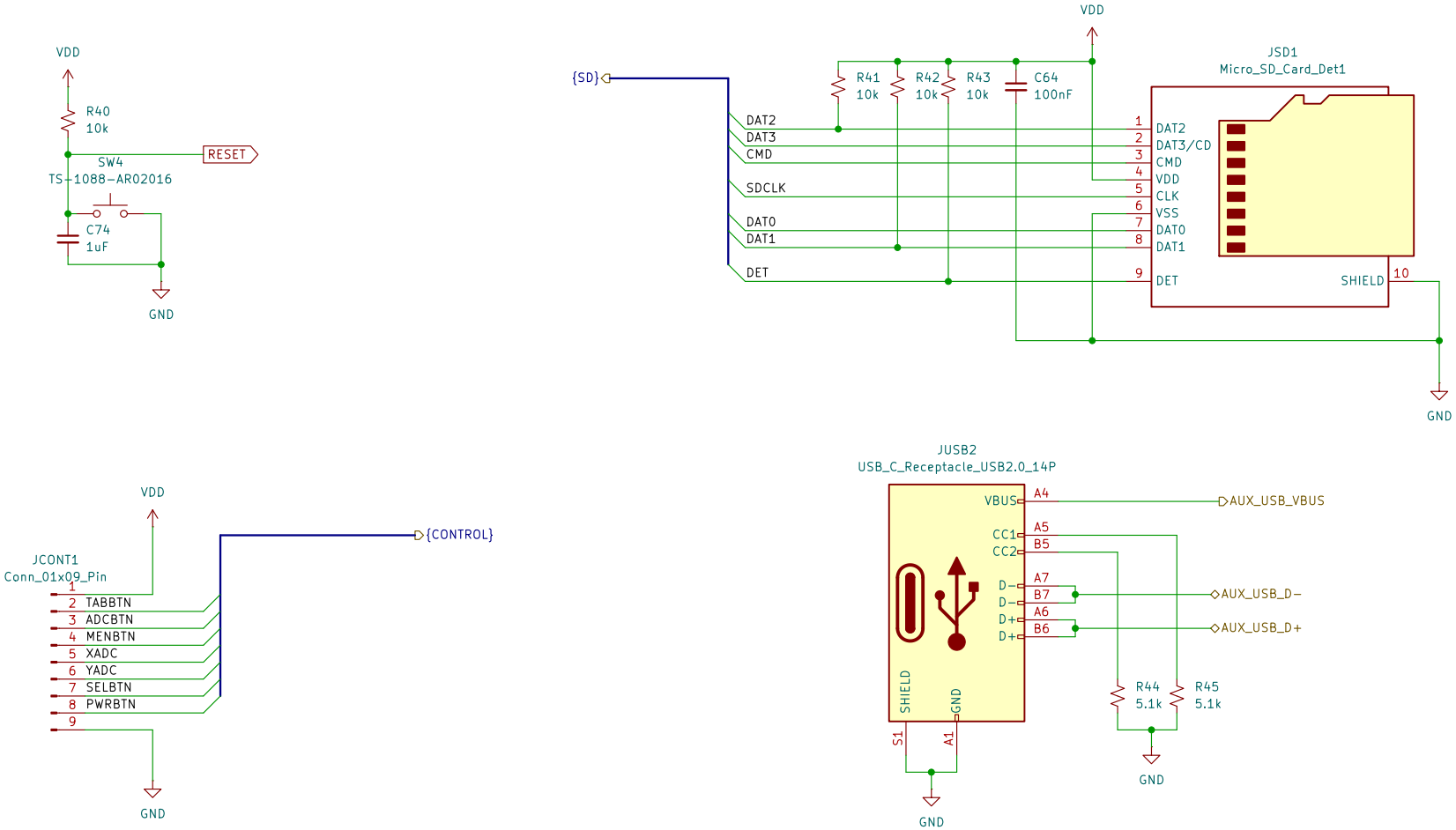

MSign-NG
MLABS
Sheet: /Peripherals/
File: peripherals.kicad_sch

Title: Misc. External Connectors

Size: A4	Date:	**Rev: A**
KiCad E.D.A. 10.0.0		Id: 13/14

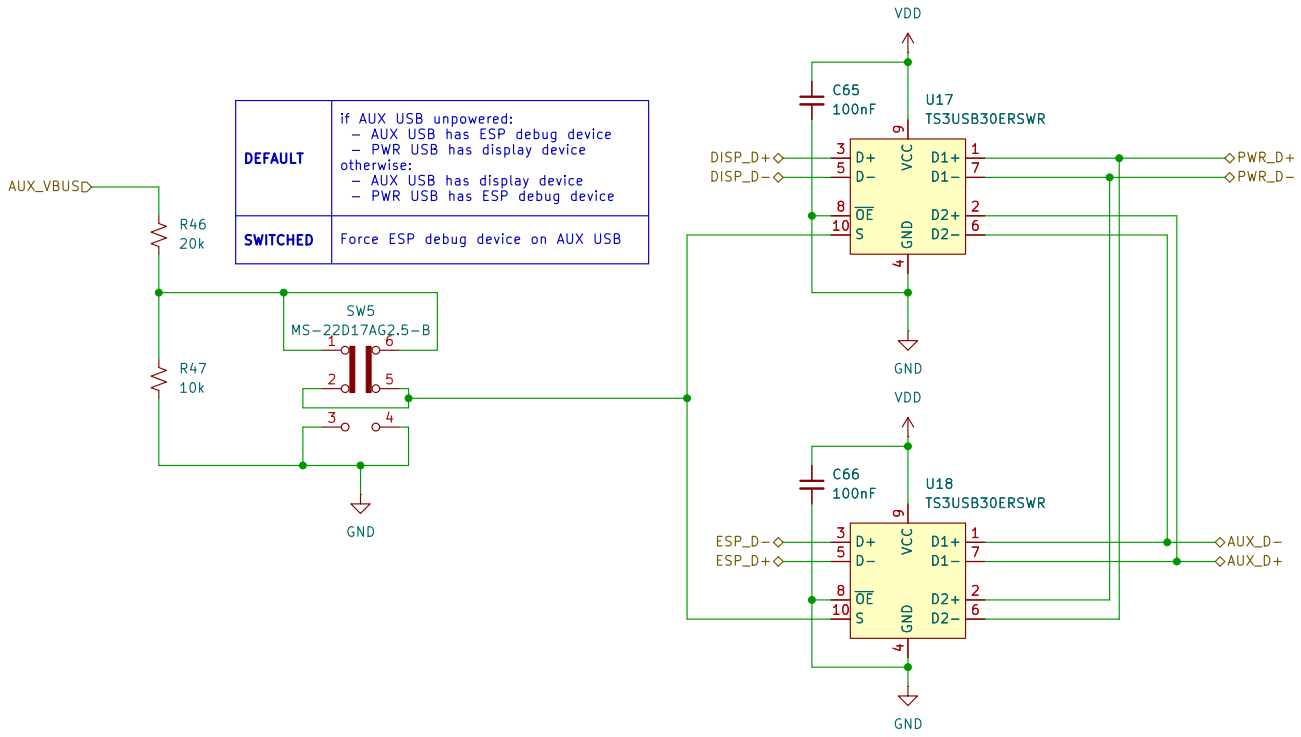

MSign-NG
MLABS

Sheet: /USB Mux/
File: usbmux.kicad_sch

Title: USB Port Crosspoint Switch

Size: A4	Date:	**Rev: A**
KiCad E.D.A. 10.0.0		Id: 14/14