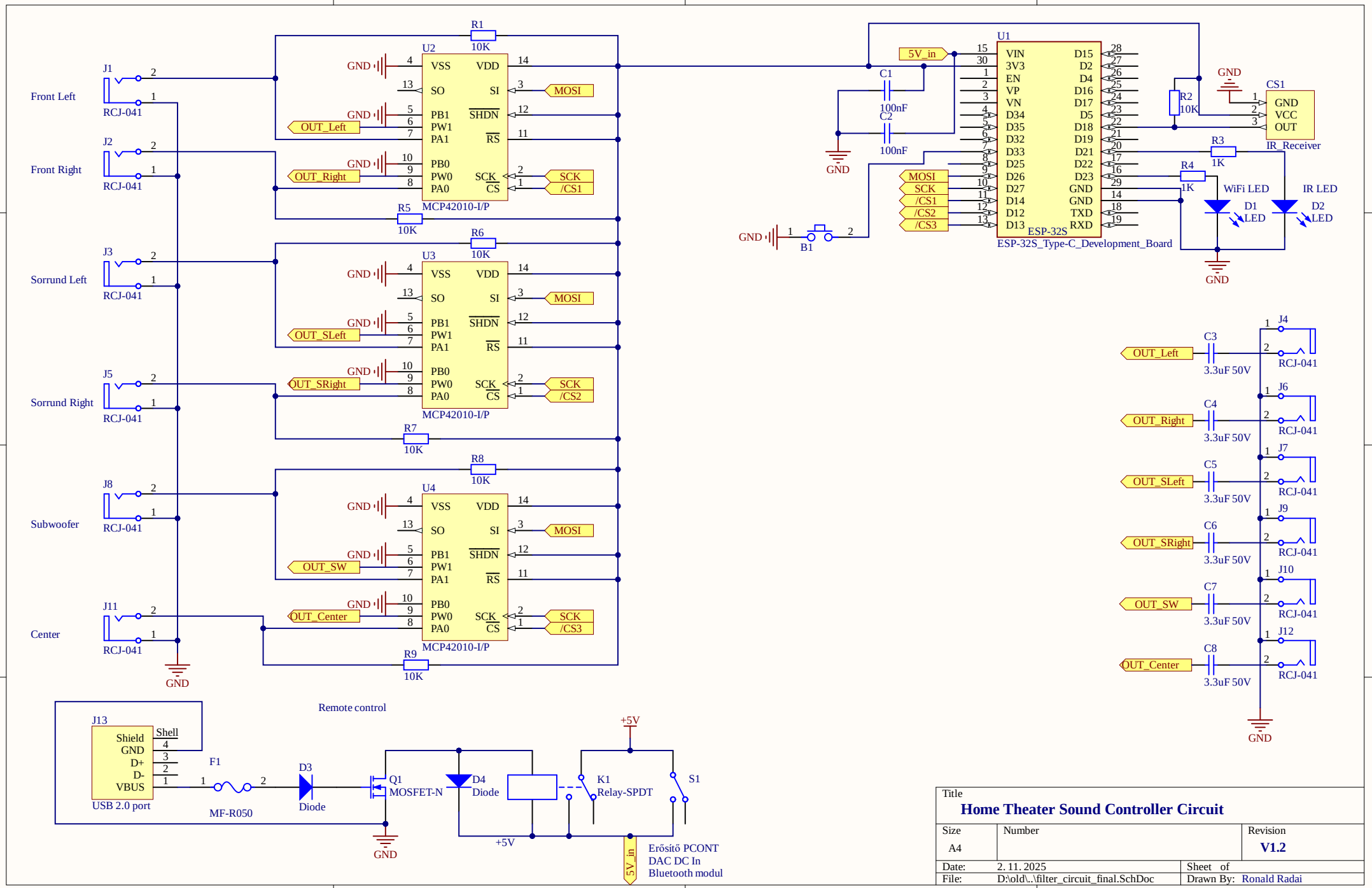

Title		
Home Theater Sound Controller Circuit		
Size A4	Number	Revision **V1.2**
Date: 2. 11. 2025		Sheet of
File: D:\old\..\filter_circuit_final.SchDoc		Drawn By: Ronald Radai