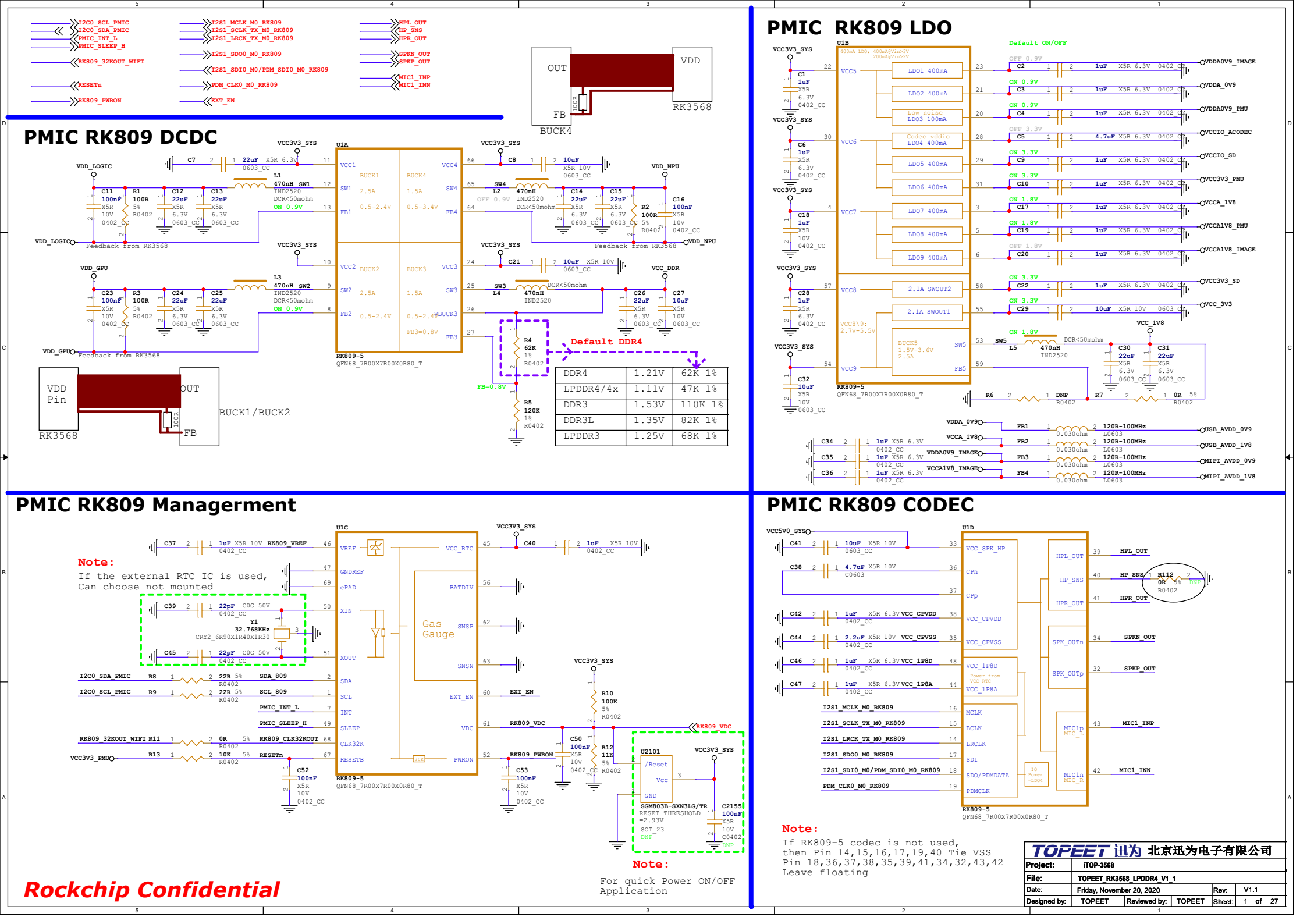
PMIC RK809 DCDC
PMIC RK809 LDO
PMIC RK809 Management
PMIC RK809 CODEC
Default DDR4
Note:
If the external RTC IC is used,
Can choose not mounted
Note:
If RK809-5 codec is not used,
then Pin 14,15,16,17,19,40 Tie VSS
Pin 18,36,37,38,35,39,41,34,32,43,42
Leave floating
Note:
For quick Power ON/OFF
Application
Rockchip Confidential
TOPEET 迅为 北京迅为电子有限公司
Project: iTOP-3568
File: TOPEET_RK3568_LPDDR4_V1_1
Date: Friday, November 20, 2020
Rev: V1.1
Designed by: TOPEET
Reviewed by: TOPEET
Sheet: 1 of 27

Table of Content

Page 1	00.Cover Page	Default
Page 2	01.Index and Notes	Default
Page 3	02.Revision History	Default
Page 4	03.Block Diagram	Default
Page 5	04.Power Diagram	Default
Page 6	05.Power Sequence/IO Domain Map	Default
Page 7	06.Reset Signal Map/Clock Map	Default
Page 8	07.UART Map	Default
Page 9	08.I2C Bus Map	Default
Page 10	09.PCIE30/MULTI_PHY/VOP Fun Map	Default
Page 11	10.RK3568_Power/GND	Default
Page 12	11.RK3568_DDR PHY	Default
Page 13	12.RK3568_OSC/PLL/PMUIO	Default
Page 14	13.RK3568_Flash/SD Controller	Default
Page 15	14.RK3568_USB/PCIe/SATA PHY	Default
Page 16	15.RK3568_SARADC/GPIO	Default
Page 17	16.RK3568_VI Interface	Default
Page 18	17.RK3568_VO Interface_1	Default
Page 19	18.RK3568_VO Interface_2	Default
Page 20	19.RK3568_Audio Interface	Default
Page 21	20.Power_DC IN	Default
Page 22	21.Power_PMIC	Default
Page 23	22.Power_Ext Discrete/RTC IC	Default
Page 24	23.Power_Flash Power Manage	Default
Page 25	25.USB2/USB3 Port	Default
Page 26	31.DRAM-DDR3_4X16Bit_96P	Option
Page 27	32.DRAM-DDR3_4X16+ECC_2X16_96P	Option
Page 28	33.DRAM-DDR4_2x16bit_96P	Default
Page 29	34.DRAM-DDR4_4x16Bit_96P	Option
Page 30	35.DRAM-DDR4_96P_2X16+ECC_1X16	Option
Page 31	36.DRAM-LPDDR3_1X32bit_178P	Option
Page 32	38.DRAM-LPDDR4X_1X32bit_200P	Option
Page 33	40.Flash-eMMC Flash	Default
Page 34	41.Flash-Nand Flash	Option
Page 35	42.Flash-MicroSD Card	Default
Page 36	43.Flash-SPI Flash	Option
Page 37	45.VI-Camera_Power	Default
Page 38	47.VI-Camera_MIPI_CSI_1x 4Lanes	Default
Page 39	48.VI-Camera_MIPI_CSI_2x 2Lanes	Option
Page 40	49.VI-HDMI1.4 RX(To MIPICSI RX)	Option
Page 41	50.VO-HDMI2.0 TX	Default
Page 42	52.VO-LCM_MIPI_DSI_TX0/TX1	Default
Page 43	53.VO-LCM_Dual MIPI_DSI TX	Option
Page 44	54.VO-LCM_LVDS TX	Option
Page 45	56.VO-LCM_eDP TX	Option
Page 46	58.TP Connector_COF	Default
Page 47	59.VO-VGA Output(eDP To VGA)	Default
Page 48	60.WIFI/BT-SDMMC1_1T1R + UART	Option
Page 49	62.WIFI/BT-SDMMC1_2T2R + UART	Default
Page 50	64.WIFI6/BT-PCIe_2T2R + UART	Option
Page 51	67.Ethernet-GEPHY_RGMII0	Option
Page 52	68.Ethernet-GEPHY_RGMII1_M1	Default
Page 53	69.Ethernet-PCIE Ethernet	Option
Page 54	70.Audio-Headphone Port	Default
Page 55	71.Audio-SingleMic+RK809_SPK	Default
Page 56	72.Audio-MicArray+RK809_SPK	Option
Page 57	74.Audio-MicArray+EXT Dual_SPK	Option
Page 58	82.SATA-SATA3.0 Slot_7P	Default
Page 59	83.PCIE-PCIE2.0_1x1Lane_RC_36P	Option
Page 60	84.PCIE-PCIE3.0_1x2Lanes_RC_64P	Option
Page 61	85.PCIE-PCIE3.0_2x1Lane_RC_32P	Default
Page 62	86.PCIE-PCIE3.0_1x2Lanes_EP_64P	Option
Page 63	87.MiniPCIe2.0 Slot_With 4G Fun	Option
Page 64	90.IR Receiver	Default
Page 65	91.Debug UART	Default
Page 66	92.KEY Array/SARADC	Default
Page 67	93.LED/HW_ID/BOM_ID	Default
Page 68	95.UART/RS485/CAN Port	Default
Page 69	99.Mark/Hole/Heatsink	Default
Page 70		
Page 71		
Page 72		
Page 73		
Page 74		
Page 75		
Page 76		

Description

Note

Option

Generate Bill of Materials

Header:

Item\tPart\tDescription\tPCB Footprint\tReference\tQuantity\tOption

Combined property string:

{Item}\t{Value}\t{Description}\t{PCB Footprint}\t{Reference}\t{Quantity}\t{Option}

Notes

NOTE 1:
Component parameter description
1. DNP stands for component not mounted temporarily
2. If Value or option is DNP, which means the area is reserved without being mounted

NOTE 2:
Please use our recommended components to avoid too many changes.
For more informations about the second source,please refer to our AVL.

Rockchip Confidential

Revision History

Version	Date	By	Change Dsecription	Approved
V1.0	2021-02-04	TOPEET	1:Revision preliminary version	
V1.1	2024-02-01	TOPEET	更新LVDS1功能，修改连接器引脚定义	

Rockchip Confidential

RK3568 Ref Block Diagram(Default configuration)

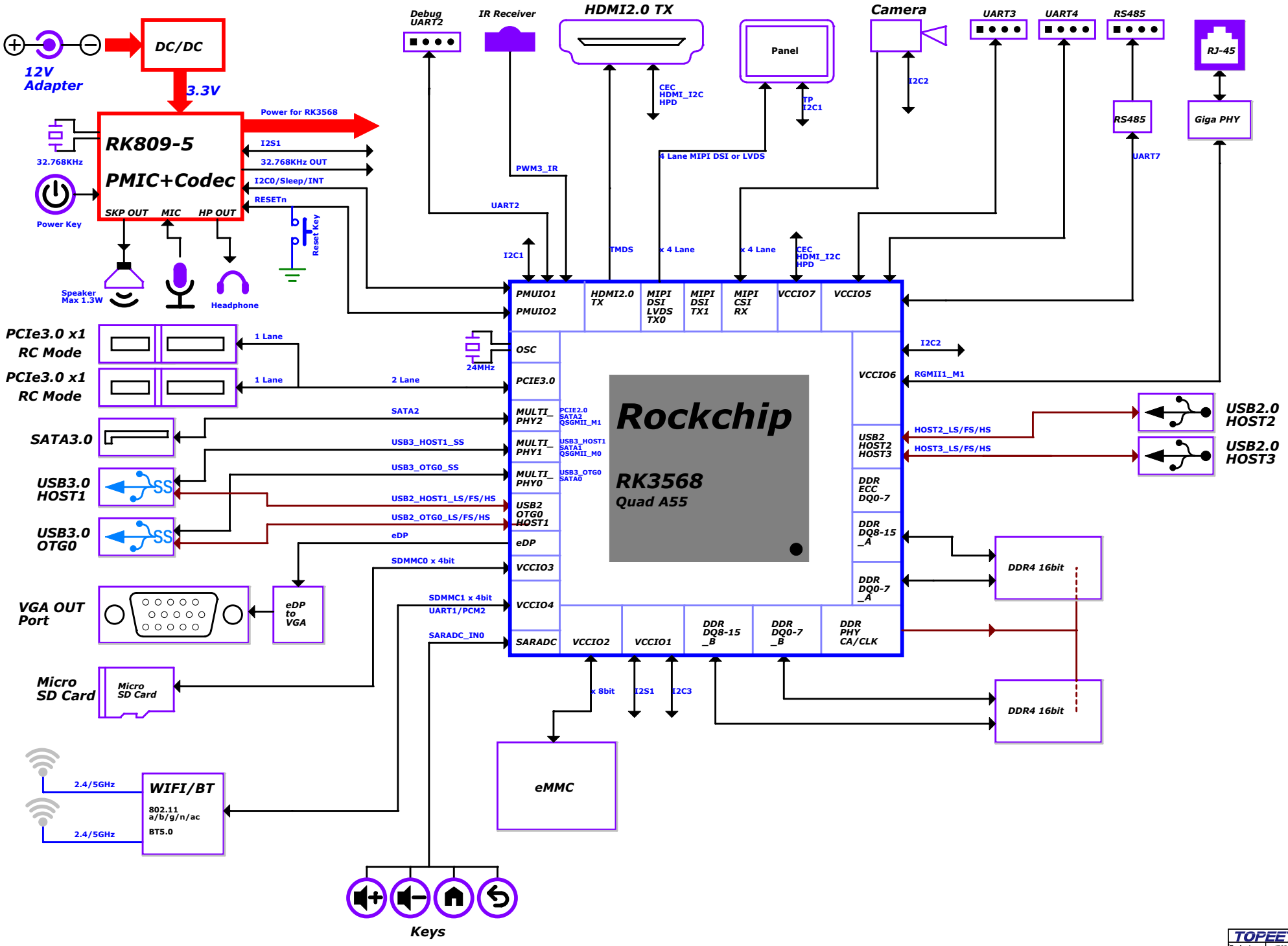

Rockchip Confidential

TOPEET 迅为 北京迅为电子有限公司			
Project:	ITOP-3568		
File:	TOPEET_RK3568_LPDDR4_V1_1		
Date:	Friday, November 20, 2020	Rev:	V1.1
Designed by: TOPEET	Reviewed by: TOPEET	Sheet:	4 of 27

Default Power Diagram

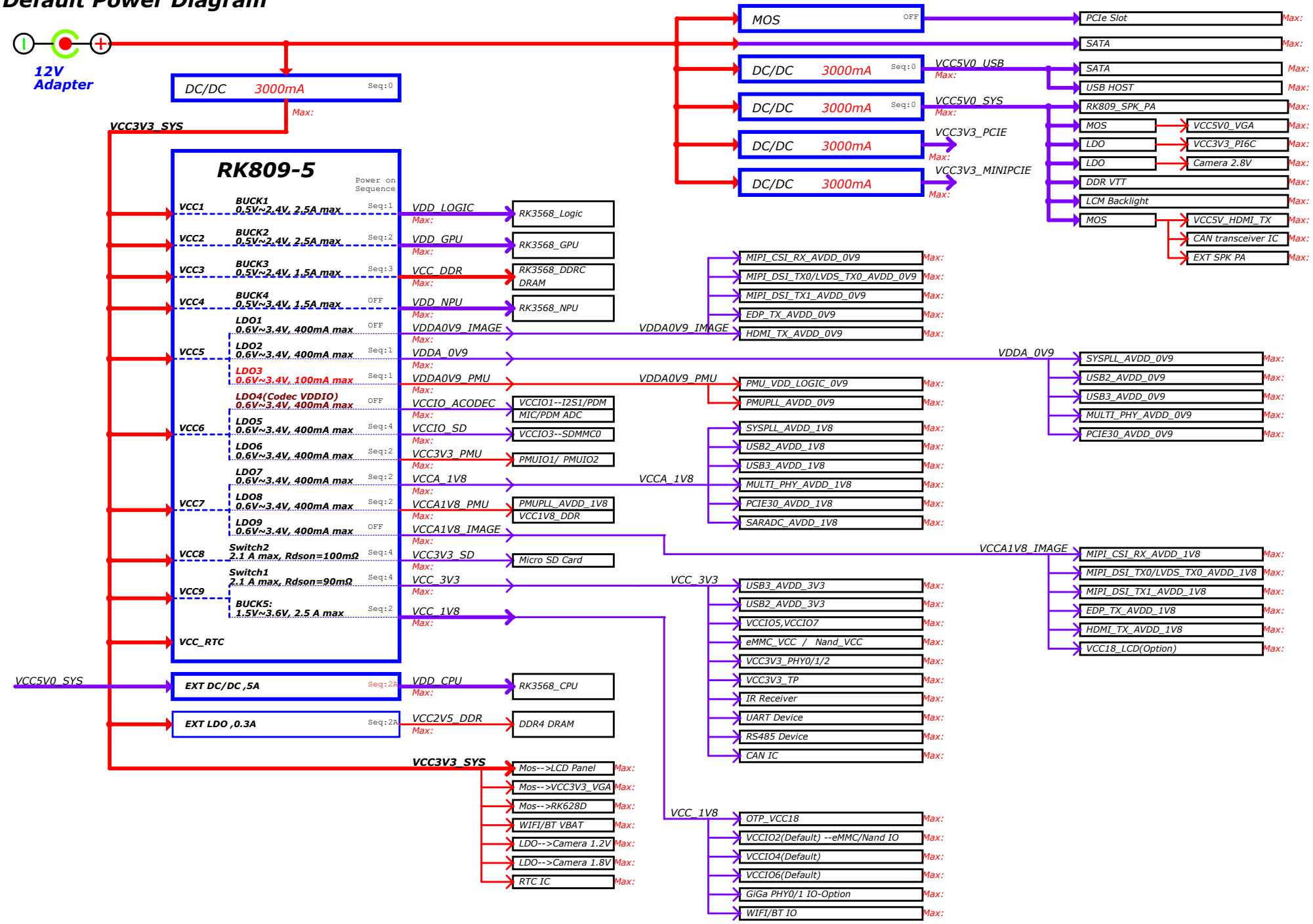

Rockchip Confidential

TOPEET 迅为 北京迅为电子有限公司			
Project:	ITOP-3568		
File:	TOPEET_RK3568_LPDDR4_V1_1		
Date:	Friday, November 20, 2020	Rev:	V1.1
Designed by: TOPEET	Reviewed by: TOPEET	Sheet:	5 of 27

Power Sequence

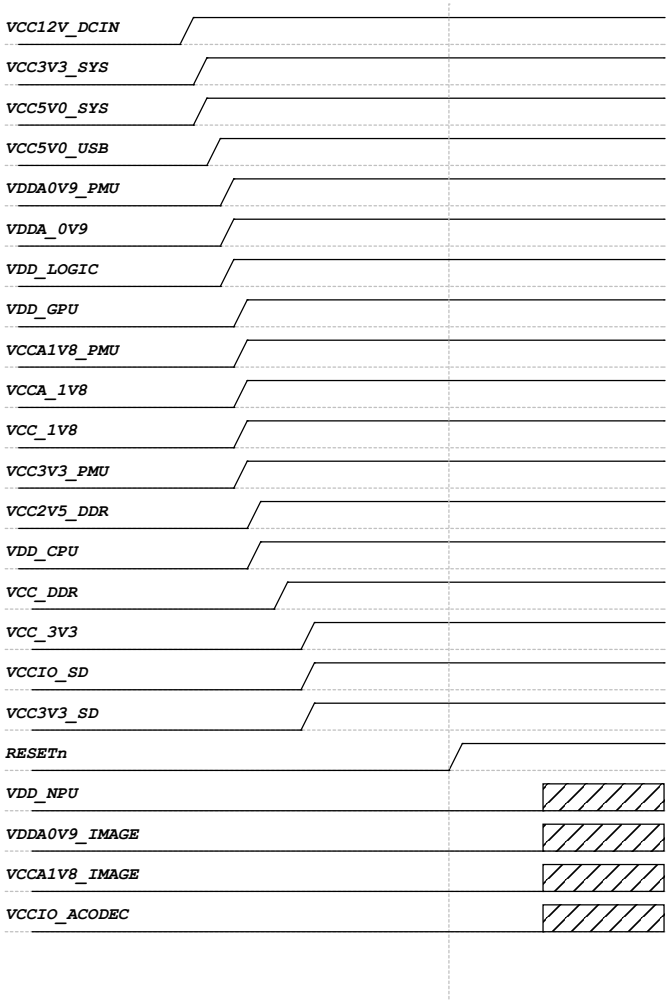

Power Supply	PMIC Channel	Supply Limit	Power Name	Time Slot	Default Voltage	Default ON/OFF	Work Voltage	Peak Current	Sleep Current
VCC3V3_SYS	RK809_BUCK1	2.5A	VDD_LOGIC	Slot:1	0.9V	ON	0.9V	TBD	TBD
VCC3V3_SYS	RK809_BUCK2	2.5A	VDD_GPU	Slot:2	0.9V	ON	DVFS	TBD	TBD
VCC3V3_SYS	RK809_BUCK3	1.5A	VCC_DDR	Slot:3	ADJ FB=0.8V	ON	1.2V (DDR4)	TBD	TBD
VCC3V3_SYS	RK809_BUCK4	1.5A	VDD_NPU	N/A	0V	OFF	DVFS	TBD	TBD
VCC3V3_SYS	RK809_LDO1	0.4A	VDDA0V9_IMAGE	N/A	0V	OFF	0.9V	TBD	TBD
	RK809_LDO2	0.4A	VDDA_0V9	Slot:1	0.9V	ON	0.9V	TBD	TBD
	RK809_LDO3	0.1A	VDDA0V9_PMU	Slot:1	0.9V	ON	0.9V	TBD	TBD
VCC3V3_SYS	RK809_LDO4	0.4A	VCCIO_ACODEC	N/A	0V	OFF	3.3V	TBD	TBD
	RK809_LDO5	0.4A	VCCIO_SD	Slot:4	3.3V	ON	3.3V or 1.8V (SD2.0=3.3V,SD3.0=1.8V)	TBD	TBD
	RK809_LDO6	0.4A	VCC3V3_PMU	Slot:2	3.3V	ON	3.3V	TBD	TBD
VCC3V3_SYS	RK809_LDO7	0.4A	VCCA_1V8	Slot:2	1.8V	ON	1.8V	TBD	TBD
	RK809_LDO8	0.4A	VCCA1V8_PMU	Slot:2	1.8V	ON	1.8V	TBD	TBD
	RK809_LDO9	0.4A	VCCA1V8_IMAGE	N/A	0V	OFF	1.8V	TBD	TBD
VCC3V3_SYS	RK809_SW2 100mohm	2.1A	VCC3V3_SD	Slot:4	3.3V	ON	3.3V	TBD	TBD
VCC3V3_SYS	RK809_SW1 90mohm	2.1A	VCC_3V3	Slot:4	3.3V	ON	3.3V	TBD	TBD
	RK809_BUCK5	2.5A	VCC_1V8	Slot:2	1.8V	ON	1.8V	TBD	TBD
	RK809_RESETn			Slot:4+5					
VCC12V_DCIN	EXT BUCK	3.0A	VCC3V3_SYS	Slot:0	3.3V	ON	3.3V	TBD	TBD
VCC12V_DCIN	EXT BUCK	3.0A	VCC5V0_SYS	Slot:0	5.0V	ON	5.0V	TBD	TBD
VCC5V0_SYS	EXT BUCK	6.0A	VDD_CPU	Slot:2A	1.025V	ON	DVFS	TBD	TBD
VCC3V3_SYS	EXT LDO	0.3A	VCC2V5_DDR	Slot:2A	2.5V	ON	2.5V	TBD	TBD

Default IO Power Domain Map

IO Domain	Pin Num	Support IO Voltage		Actual assigned IO Domain Voltage			Notes
		3.3V	1.8V	Supply Power Net Name	Power Source	Voltage	
PMUIO1	Pin Y20	✓	✗	VCC3V3_PMU	VCC3V3_PMU	3.3V	
PMUIO2	Pin W19	✓	✓	VCC3V3_PMU	VCC3V3_PMU	3.3V	
VCCIO1	Pin H17	✓	✓	VCCIO_ACODEC	VCCIO_ACODEC	3.3V	
VCCIO2	Pin H18	✓	✓	VCCIO_FLASH	VCC_1V8	1.8V	PIN "FLASH_VOL_SEL" must be logic High if VCCIO_FLASH=3.3V,FLASH_VOL_SEL must be logic low
VCCIO3	Pin L22	✓	✓	VCCIO_SD	VCCIO_SD	3.3V	
VCCIO4	Pin J21	✓	✓	VCCIO4	VCC_1V8	1.8V	
VCCIO5	Pin V10 Pin V11	✓	✓	VCCIO5	VCC_3V3	3.3V	
VCCIO6	Pin R9 Pin U9	✓	✓	VCCIO6	VCC_1V8	1.8V	
VCCIO7	Pin V12	✓	✓	VCCIO7	VCC_3V3	3.3V	

If the power domain voltage is adjusted, the software configuration must be updated synchronously, other wise the IO may be damaged!

Rockchip Confidential

Default Reset Signal Map

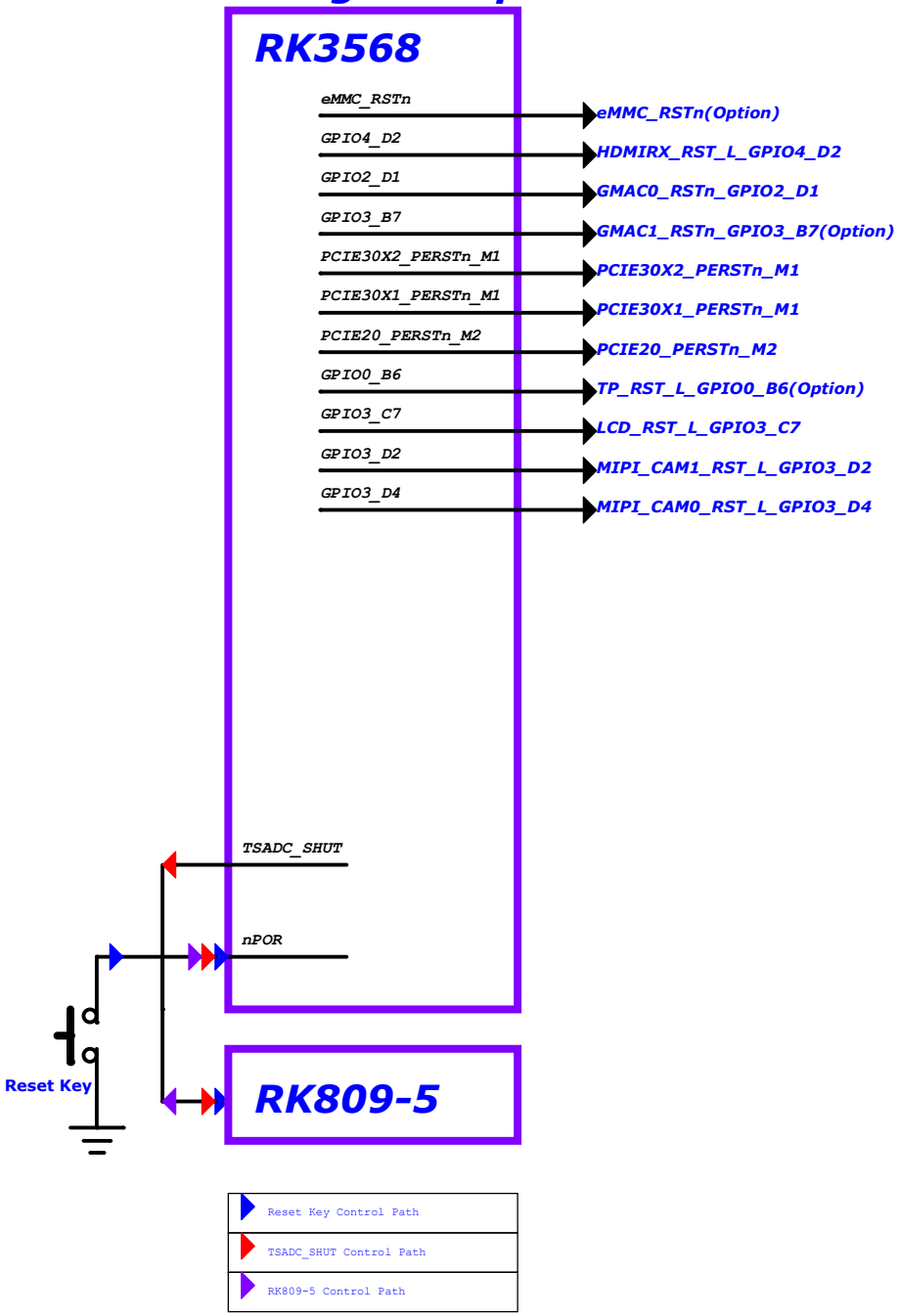

Default Clock Map

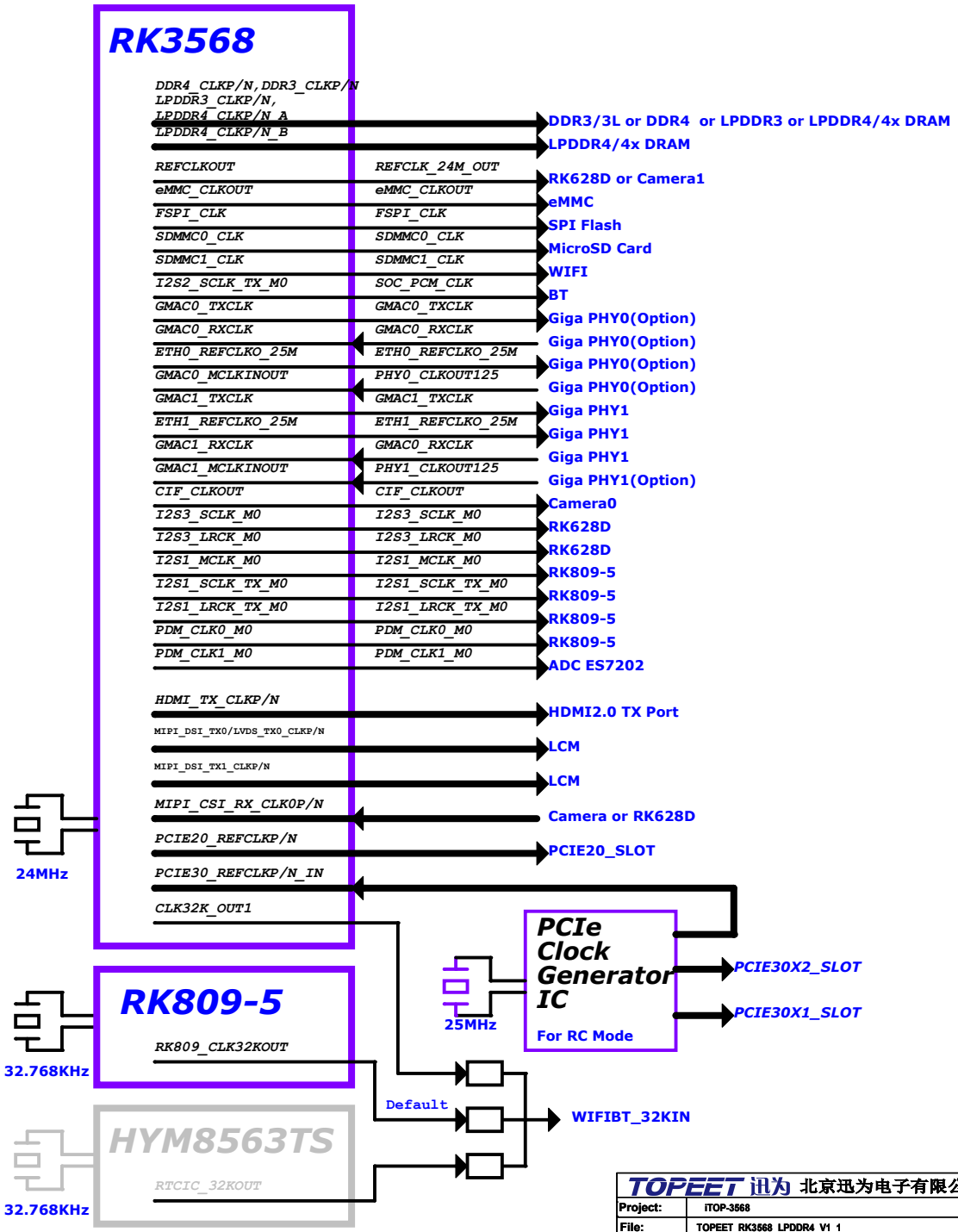

Note:
The power off hold time scheme is required,
It is recommended to use external RTC IC

Rockchip Confidential

TOPEET 迅为 北京迅为电子有限公司					
Project:	iTOP-3568				
File:	TOPEET_RK3568_LPDDR4_V1_1				
Date:	Thursday, January 07, 2021			Rev:	V1.1
Designed by:	TOPEET	Reviewed by:	TOPEET	Sheet:	7 of 27

Default UART Map

Rockchip Confidential

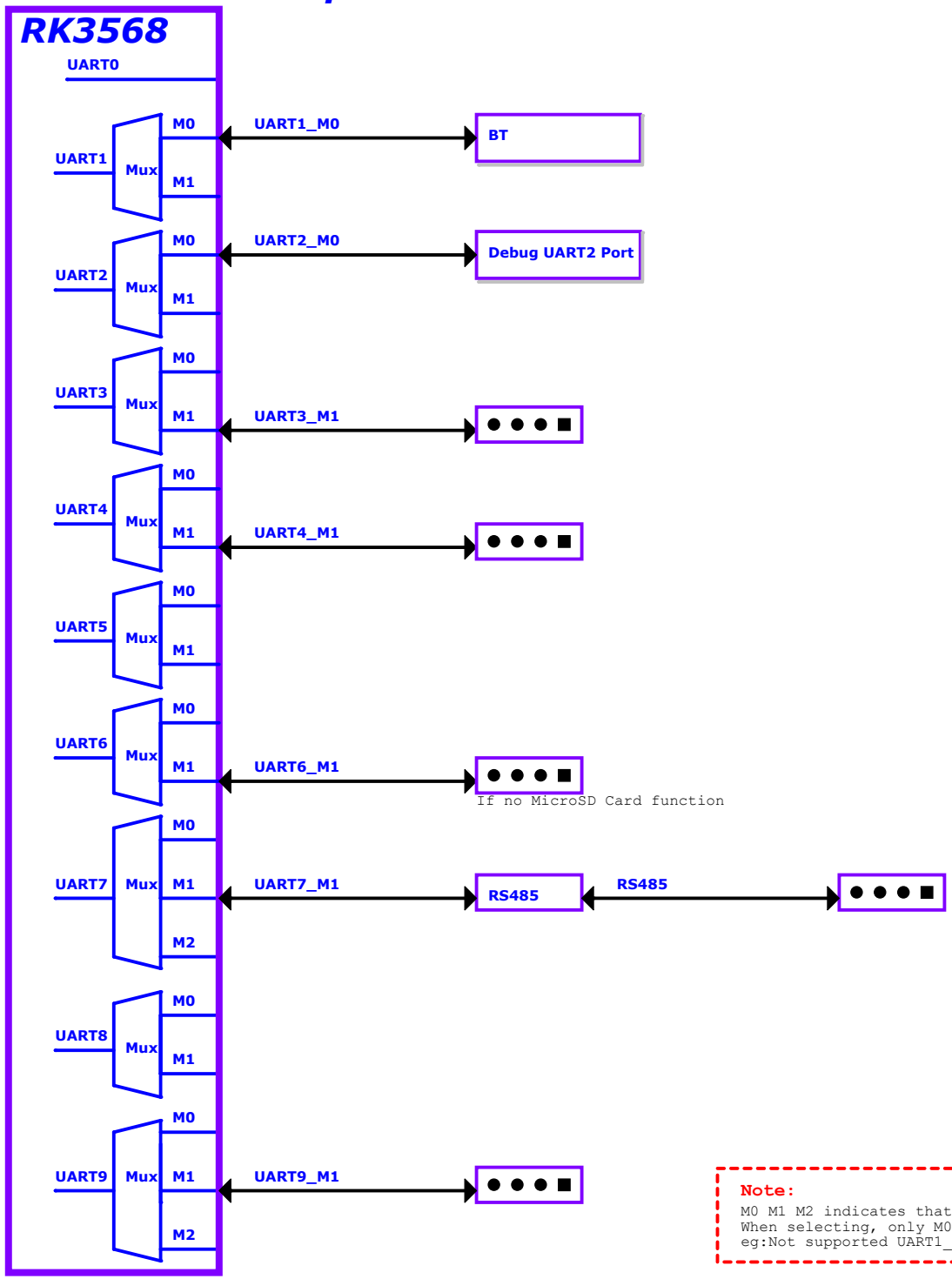

Note:

M0 M1 M2 indicates that the same function is multiplexed to different IO
When selecting, only M0 or M1 or M2 can be selected
eg:Not supported UART1_TX_M0 and UART1_RX_M1 combination

TOPEET 迅为 北京迅为电子有限公司					
Project:	iTOP-3568				
File:	TOPEET_RK3568_LPDDR4_V1_1				
Date:	Friday, November 20, 2020			Rev:	V1.1
Designed by:	TOPEET	Reviewed by:	TOPEET	Sheet:	8 of 27

Default I2C Map

Note:
M0 M1 M2 indicates that the same function is multiplexed to different IO. When selecting, only M0 or M1 or M2 can be selected
eg:
Not supported I2C1_SCL_M0 and I2C1_SDA_M1 combination

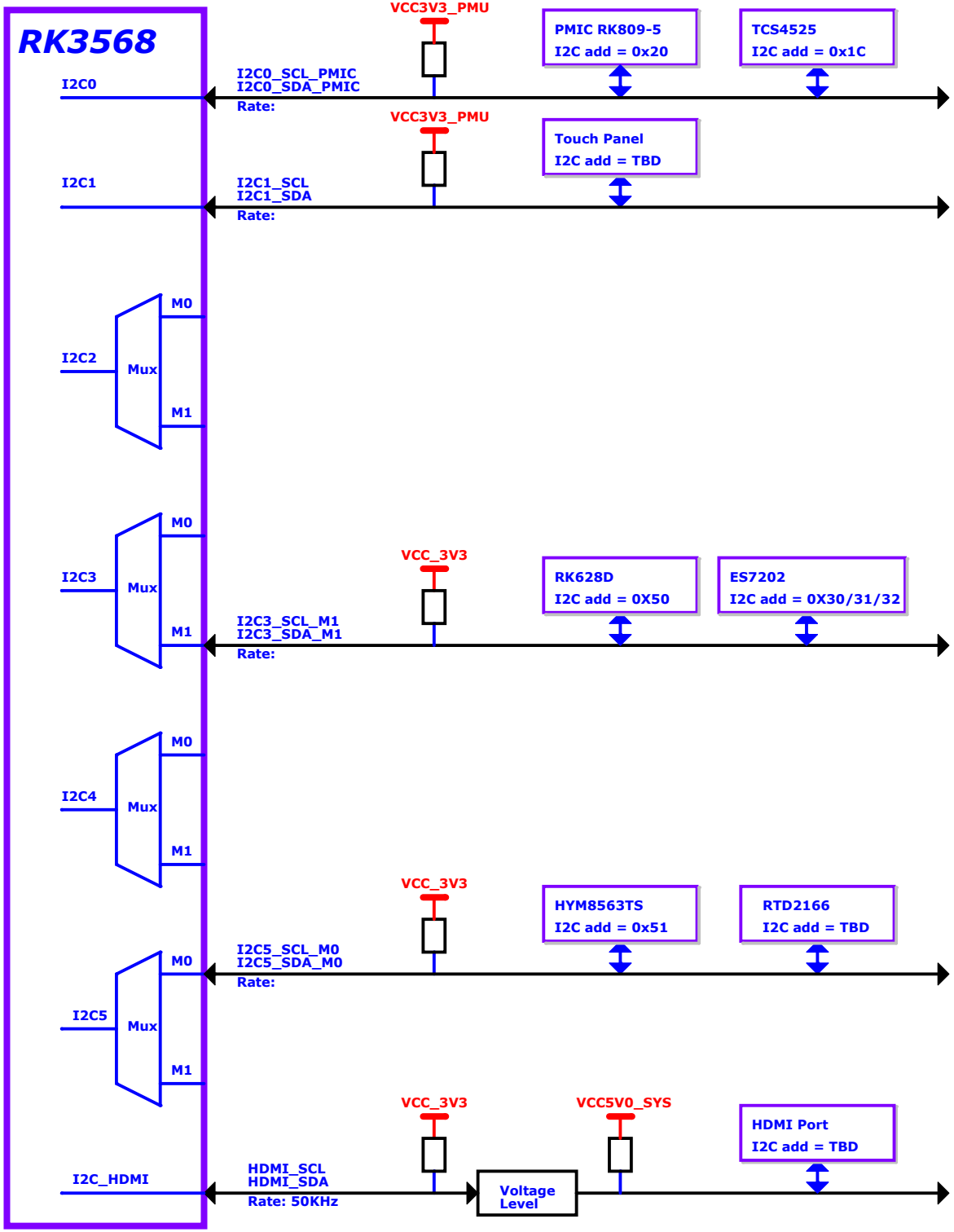

Rockchip Confidential

TOPEET 迅为 北京迅为电子有限公司					
Project:	iTOP-3568				
File:	TOPEET_RK3568_LPDDR4_V1_1				
Date:	Friday, November 20, 2020			Rev:	V1.1
Designed by:	TOPEET	Reviewed by:	TOPEET	Sheet:	9 of 27

MULTI_PHY0/1/2 Path Map

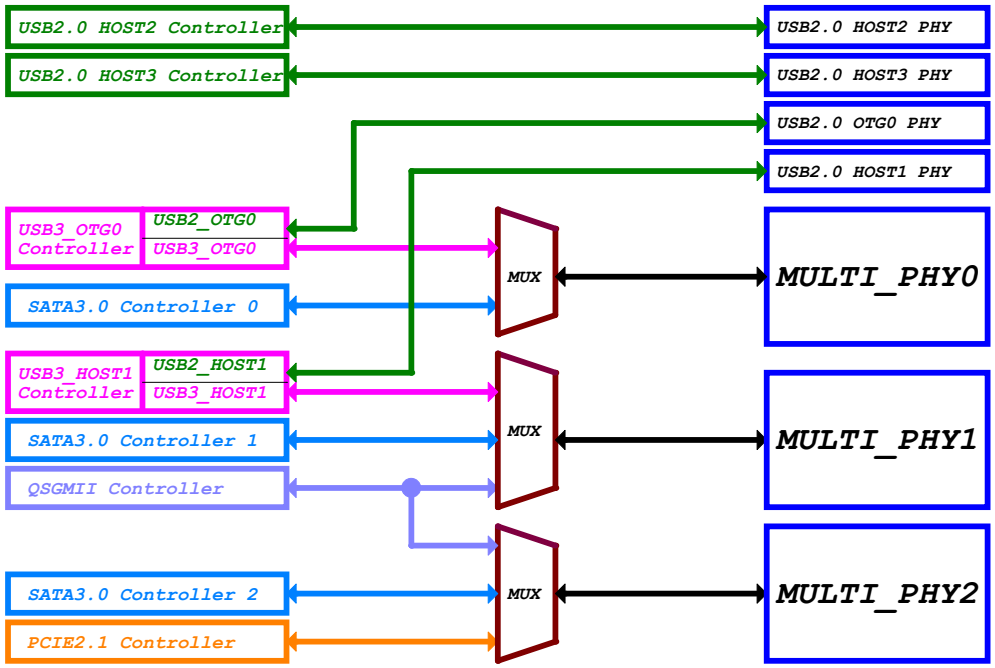

VOP Path Map

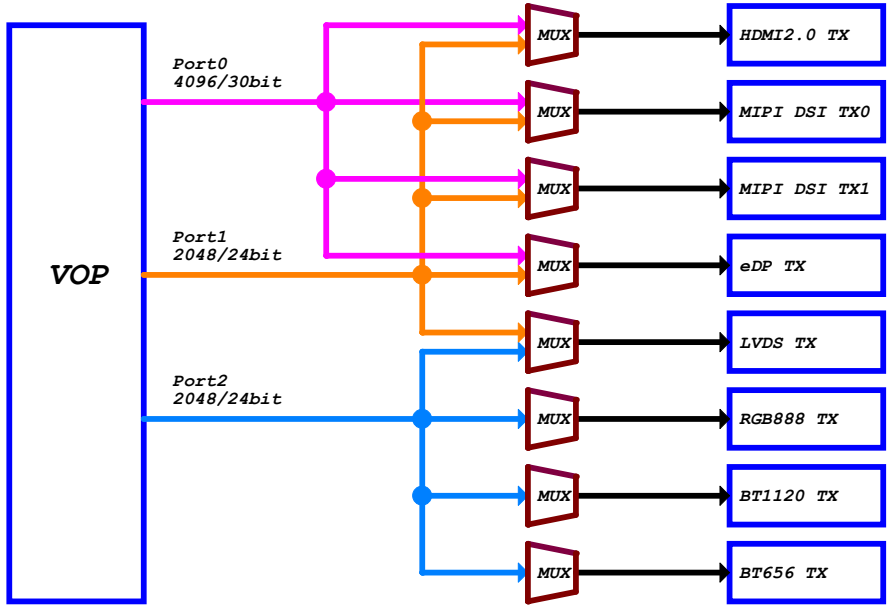

USB3.0 OTG0

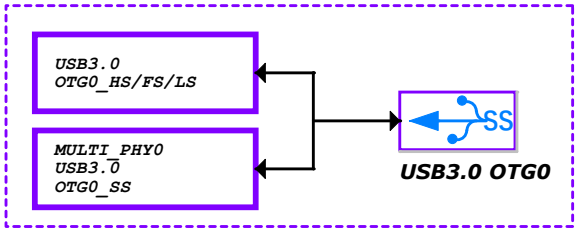

USB3.0 HOST1

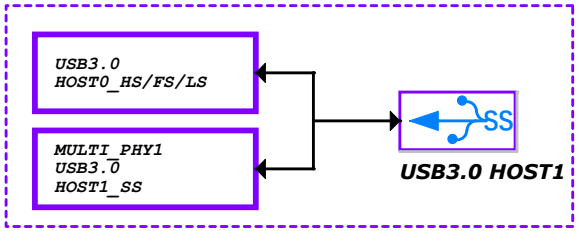

PCIe3.0 PHY

Option1	PCIe3.0 x2Lane	PCIE30_REFCLK (RC/EP:input)	PCIE30_TX0 PCIE30_RX0 PCIE30_TX1 PCIE30_RX1	PCIE30X2_CLKREQn PCIE30X2_WAKEn PCIE30X2_PERSTn PCIE30X2_BUTTONRSTn	RC or EP
Option2	PCIe3.0 x1Lane + PCIe3.0 x1Lane	PCIE30_REFCLK (RC:input)	PCIE30_TX0 PCIE30_RX0	PCIE30X2_CLKREQn PCIE30X2_WAKEn PCIE30X2_PERSTn PCIE30X2_BUTTONRSTn	Only RC
			PCIE30_TX1 PCIE30_RX1	PCIE30X1_CLKREQn PCIE30X1_WAKEn PCIE30X1_PERSTn PCIE30X1_BUTTONRSTn	Only RC

PCIe3.0 REFCLK-RC Mode

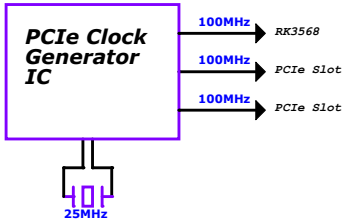

PCIe3.0 REFCLK-EP Mode

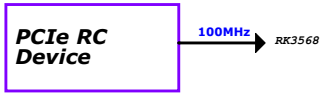

PCIe2.1 PHY

MULTI_ PHY2	PCIe2.1 x1Lane	PCIE20_REFCLK (RC:output)	PCIE20_TX PCIE20_RX	PCIE20_CLKREQn PCIE20_WAKEn PCIE20_PERSTn PCIE20_BUTTONRSTn	Only RC

PCIe2.1 REFCLK-RC Mode

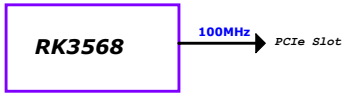

Rockchip Confidential

RK3568_ABCDE (Power&Gnd)

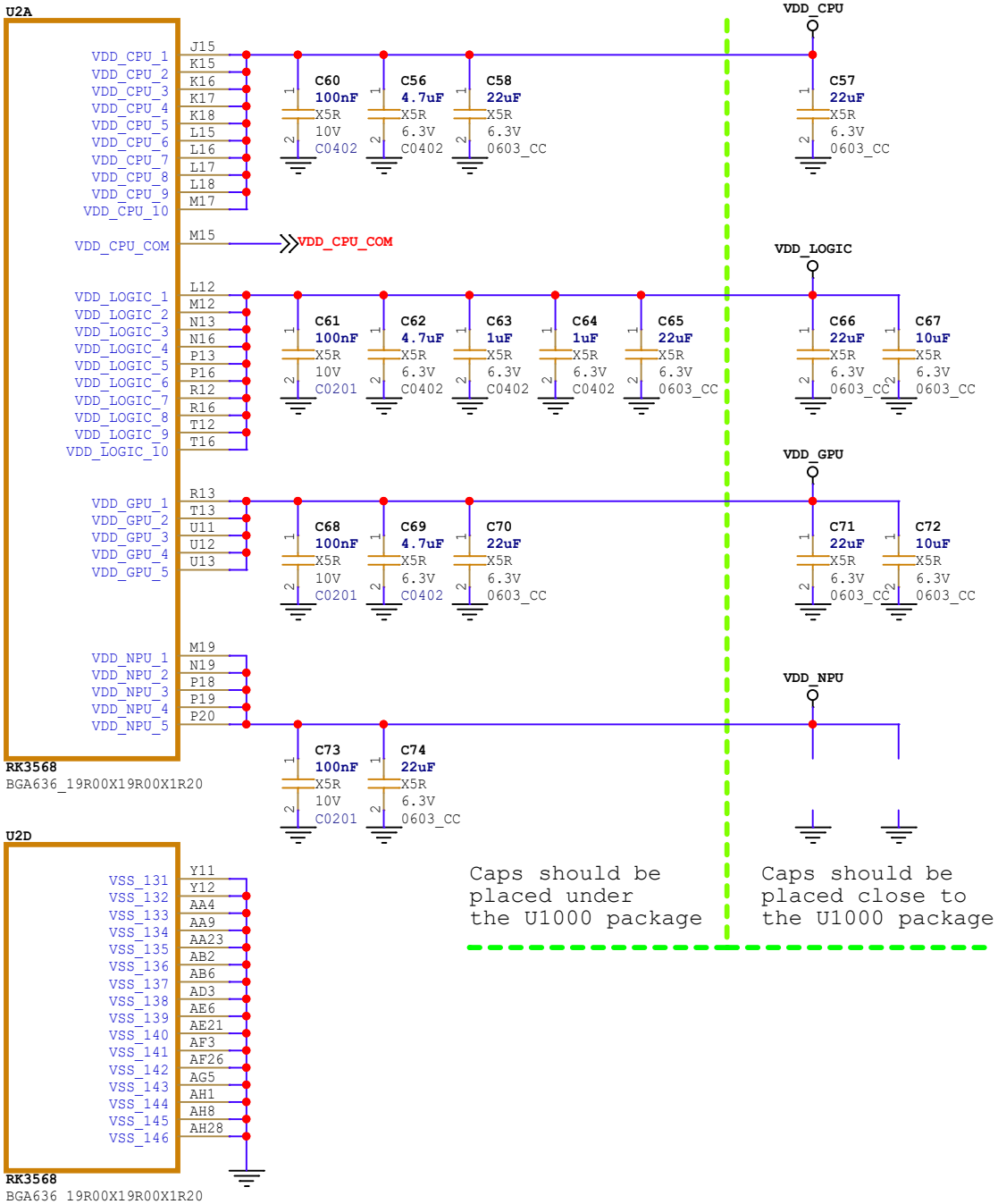

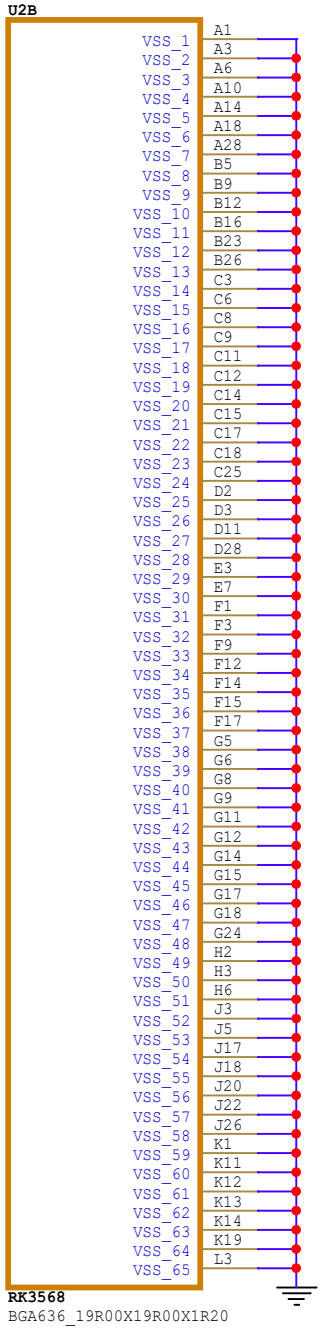

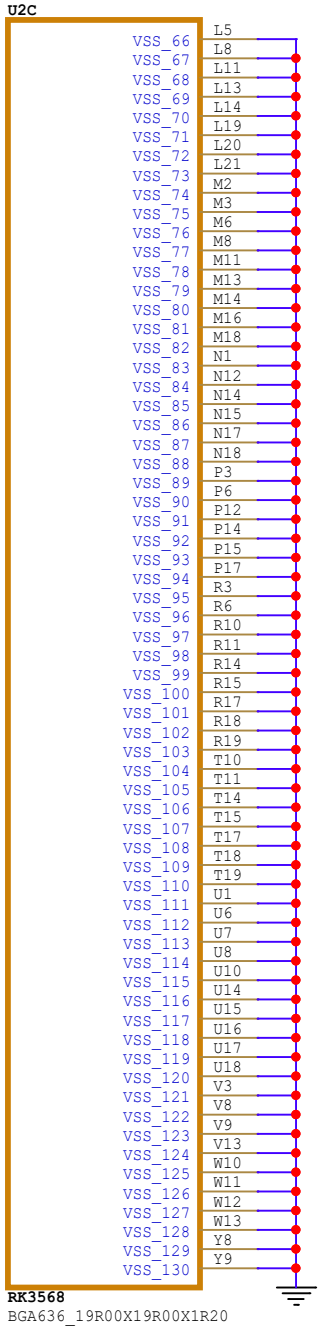

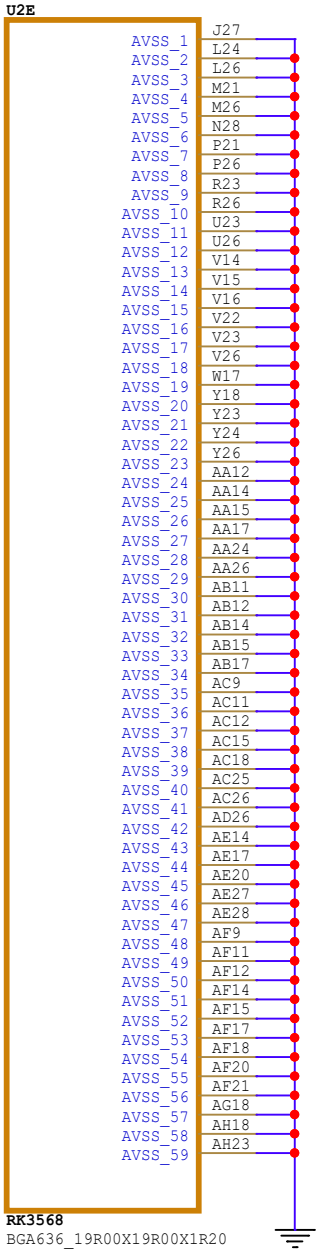

Rockchip Confidential

TOPEET 迅为 北京迅为电子有限公司					
Project:	iTOP-3568				
File:	TOPEET_RK3568_LPDDR4_V1_1				
Date:	Friday, November 20, 2020			Rev:	V1.1
Designed by:	TOPEET	Reviewed by:	TOPEET	Sheet:	11 of 27

RK3568_F (DDR PHY)

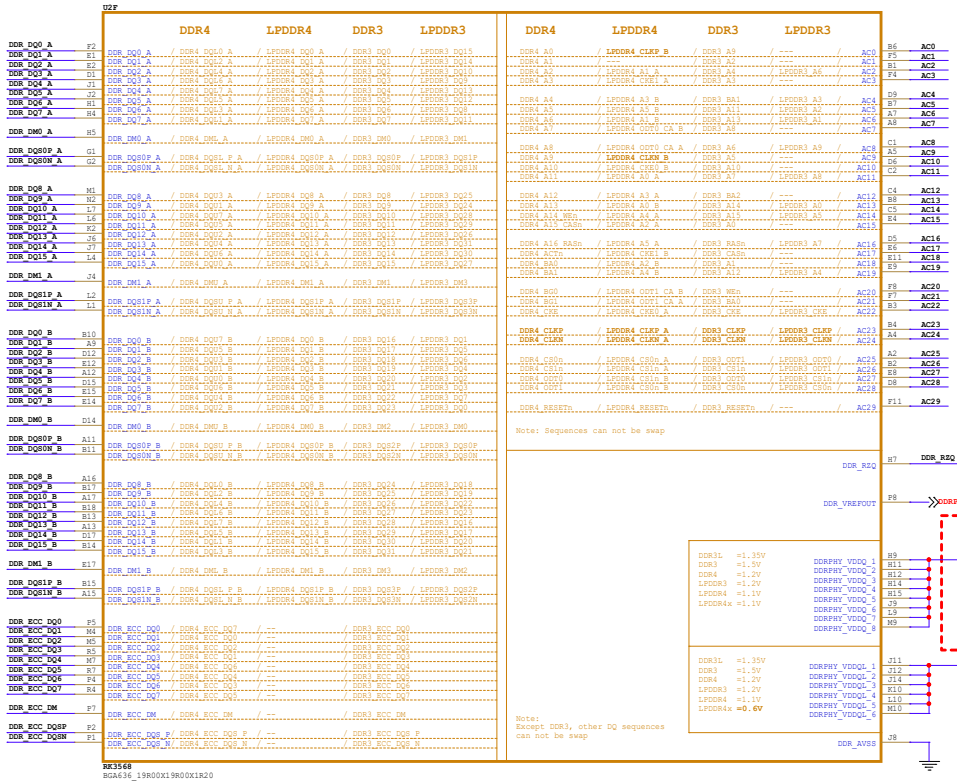

Default DDR4 AC LPDDR4/4x AC DDR3 AC LPDDR3 AC

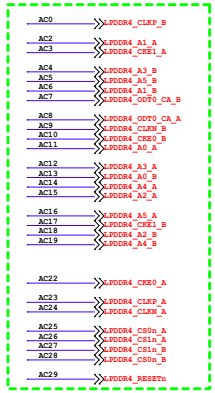

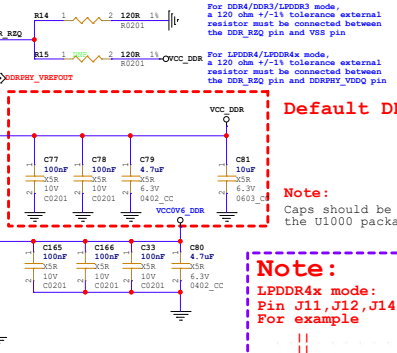

Default DDR4

Note:
Caps should be placed under
the U1000 package

Note:

LPDDR4x mode:
Pin J11,J12,J14,K10,L10,M10 connected to VCC0V6_DDR power supply
For example

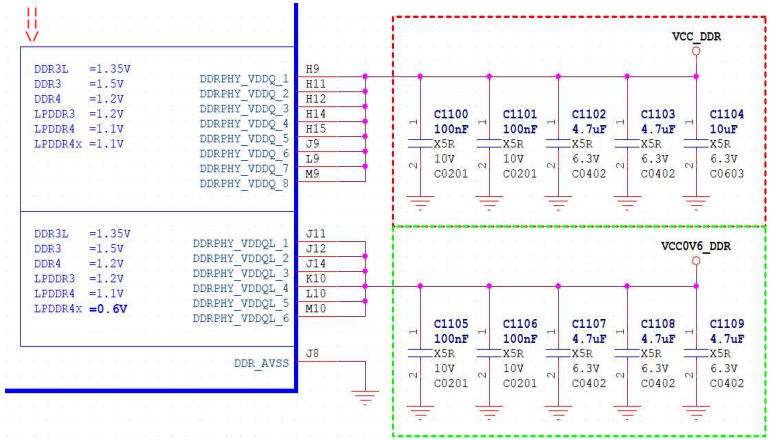

Caps should be placed under
the U1000 package

LPDDR4/4x DQ

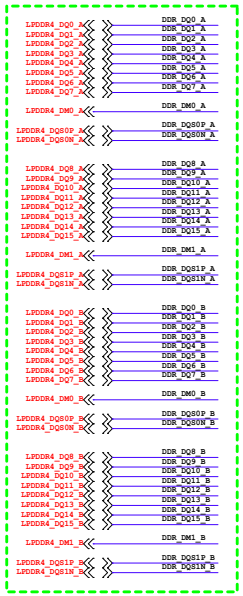

DDR4 ECC DQ DDR3 ECC DQ

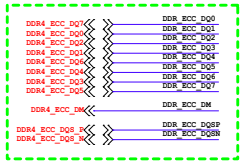

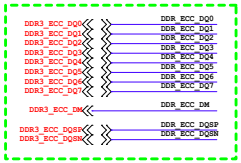

Rockchip Confidential

TOPEET 迅为 北京迅为电子有限公司			
Project:	ITOP-3568		
File:	TOPEET_RK3568_LPDDR4_V1_1		
Date:	Friday, November 20, 2020	Rev:	V1.1
Designed by: TOPEET	Reviewed by: TOPEET	Sheet:	12 of 27

RK3568_G(OSC/PLL/PMUIO1/2)

Note:
Adjusted the load capacitance according to the crystal specification.

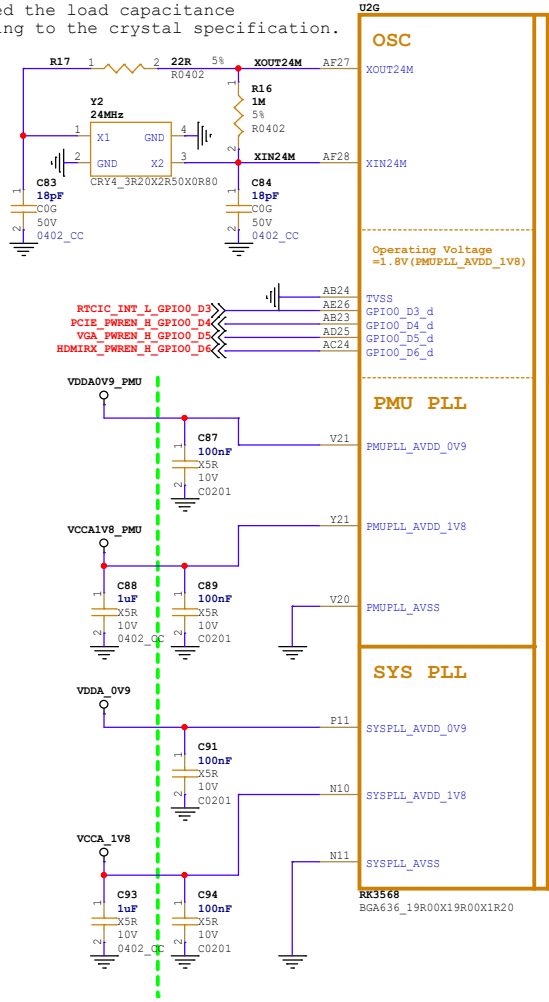

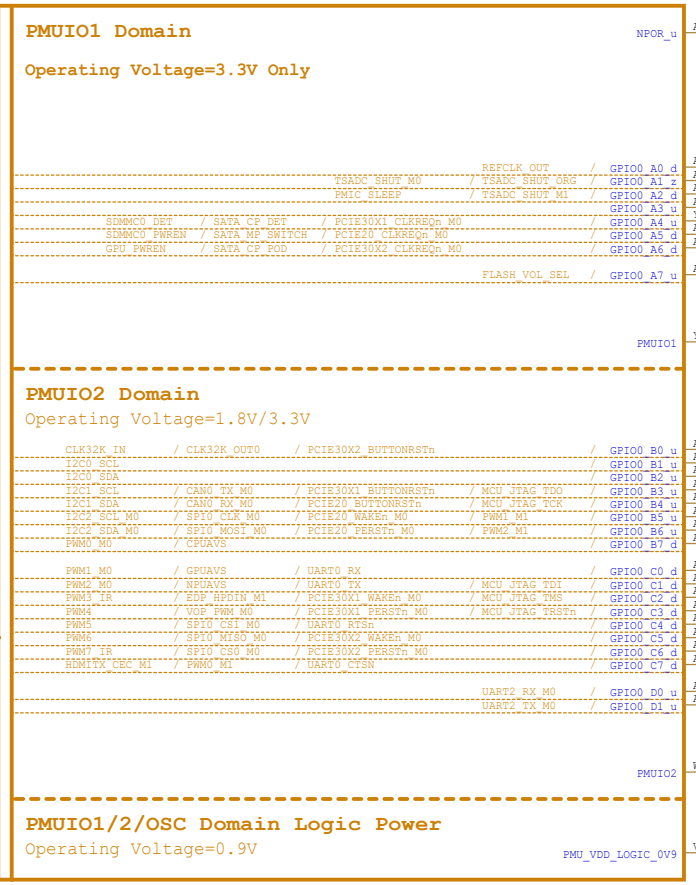

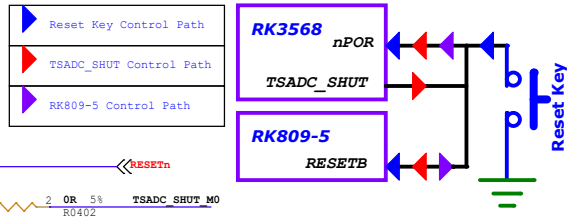

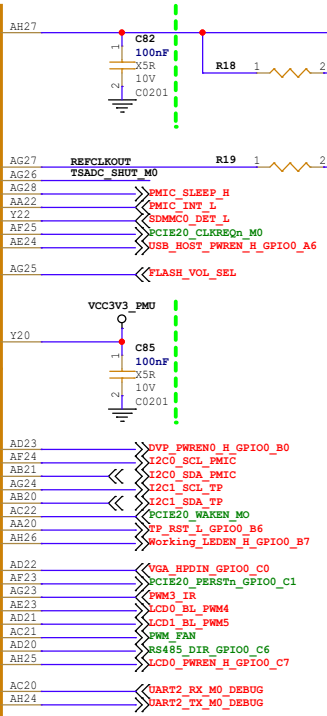

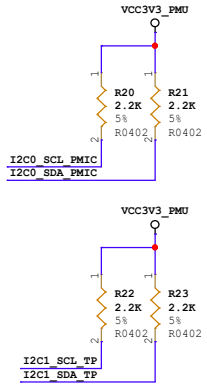

Note:
If the power domain voltage is adjusted, the software configuration must be updated synchronously, other wise the IO may be damaged!

Note:
Caps of between dashed green lines and U1000 should be placed under the U1000 package.
Other caps should be placed close to the U1000 package

Rockchip Confidential

TOPEET 迅为 北京迅为电子有限公司					
Project:	iTOP-3568				
File:	TOPEET_RK3568_LPDDR4_V1_1				
Date:	Friday, November 20, 2020			Rev:	V1.1
Designed by:	TOPEET	Reviewed by:	TOPEET	Sheet:	13 of 27

RK3568_I(VCCIO2 Domain)

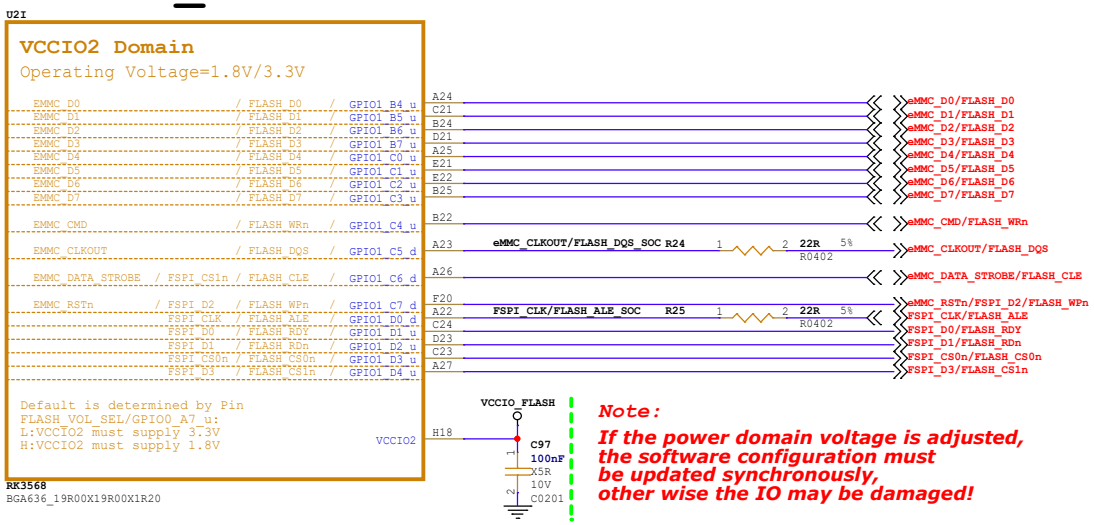

Note:

If the power domain voltage is adjusted, the software configuration must be updated synchronously, other wise the IO may be damaged!

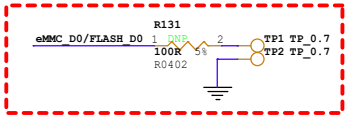

Note:

For eMMC or Nand Flash:
If eMMC_D0/FLASH_D0=0V at after power on and reset, then system will enter into Maskrom mode.

Layout note:

Test point must be placed on the line, and no branch can be added

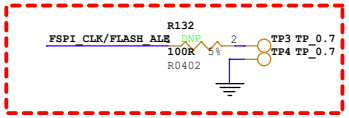

Note:

For SPI Flash:
If FSPI_CLK=0V at after power on and reset, then system will enter into Maskrom mode.

Note:

Reserve TestPoint for put the system into Maskrom mode to update the firmware
When writing mismatched firmware or other conditions result in boot failure, use this test point

Except in this case, please use Recovery Key
Put the system into loader mode to update the firmware

RK3568_J(VCCIO3 Domain)

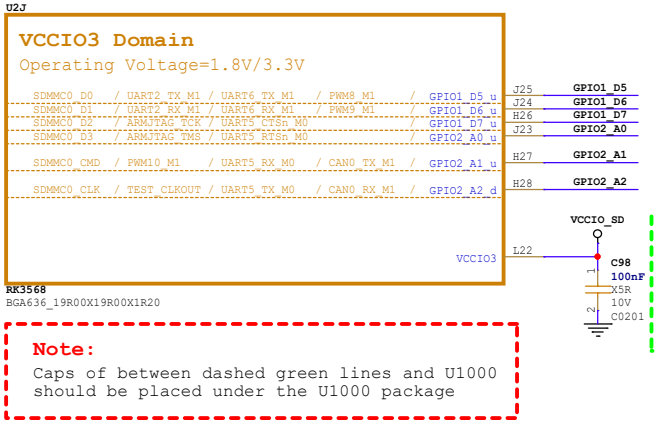

Note:

Caps of between dashed green lines and U1000 should be placed under the U1000 package

Default
SDMMC0&JTAG

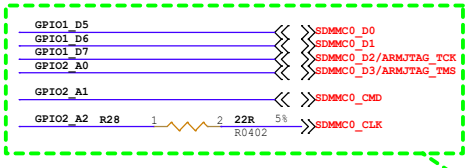

If no MicroSD Card function:
UART&CAN&JTAG

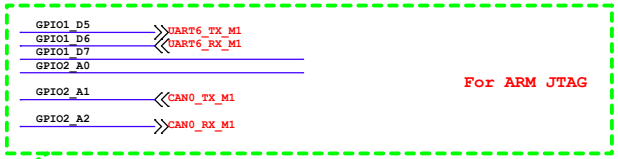

Option

Note:

If the power domain voltage is adjusted, the software configuration must be updated synchronously, other wise the IO may be damaged!

Rockchip Confidential

TOPEET 迅为 北京迅为电子有限公司					
Project:	iTOP-3568				
File:	TOPEET_RK3568_LPDDR4_V1_1				
Date:	Friday, November 20, 2020			Rev:	V1.1
Designed by:	TOPEET	Reviewed by:	TOPEET	Sheet:	14 of 27

RK3568_U(USB3.0/SATA/QSGMII/PCIe2.0 x1)

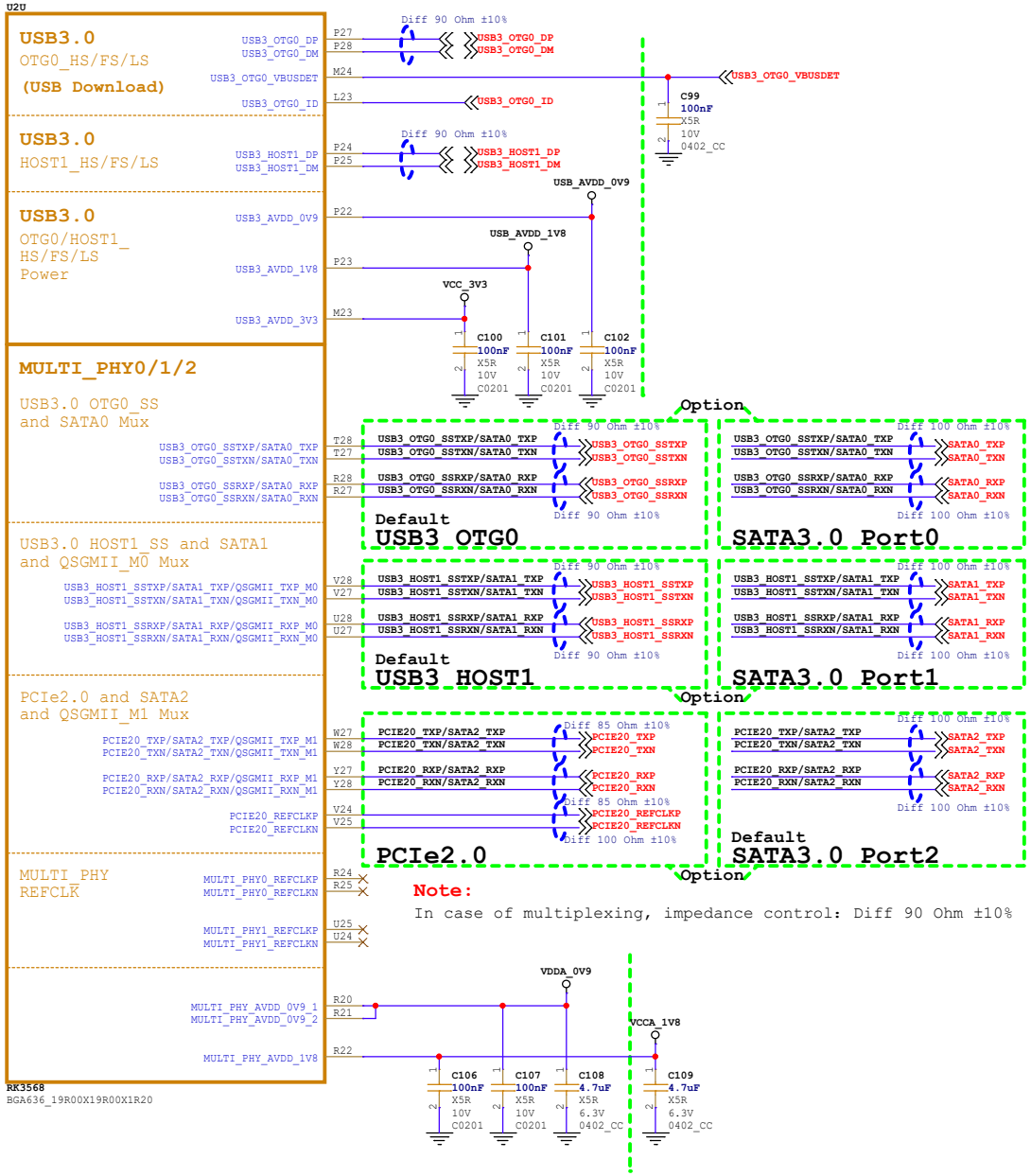

Note:

Caps of between dashed green lines and U1000
should be placed under the U1000 package.
Other caps should be placed close to the U1000 package

Rockchip Confidential

RK3568_V(USB2.0 HOST)

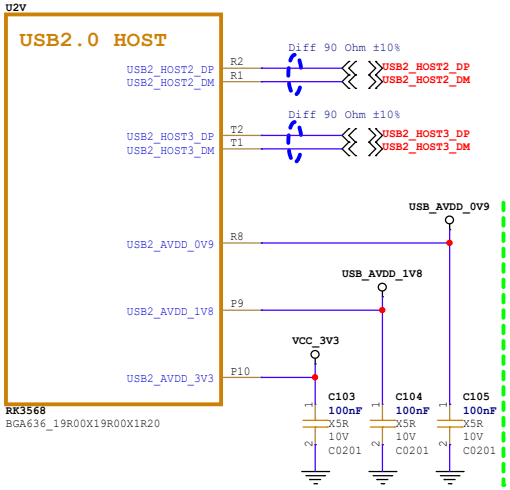

RK3568_W(PCIe3.0 x2)

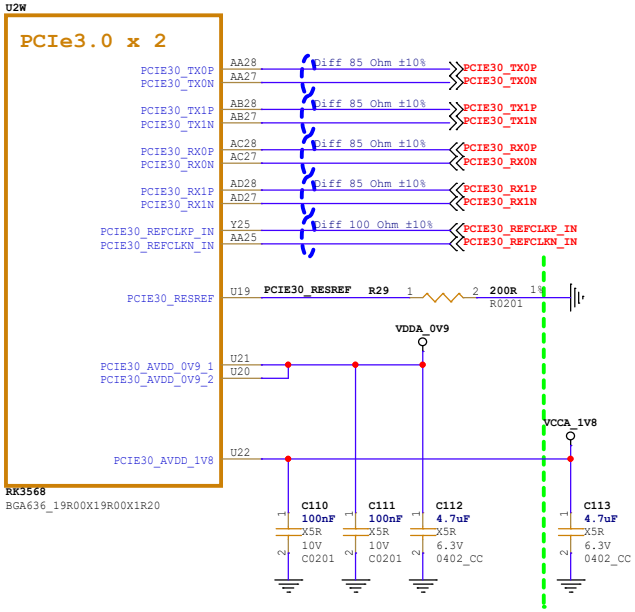

TOPEET 迅为 北京迅为电子有限公司					
Project:	iTOP-3568				
File:	TOPEET_RK3568_LPDDR4_V1_1				
Date:	Friday, November 20, 2020			Rev:	V1.1
Designed by:	TOPEET	Reviewed by:	TOPEET	Sheet:	15 of 27

RK3568_K(VCCIO4 Domain)

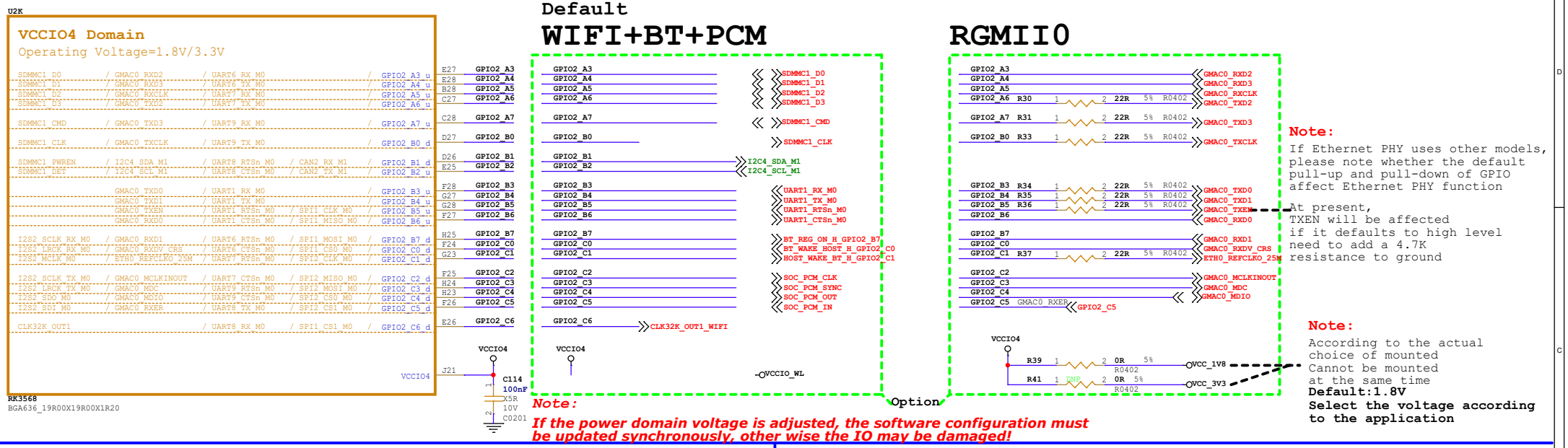

RK3568_N(VCCIO7 Domain)

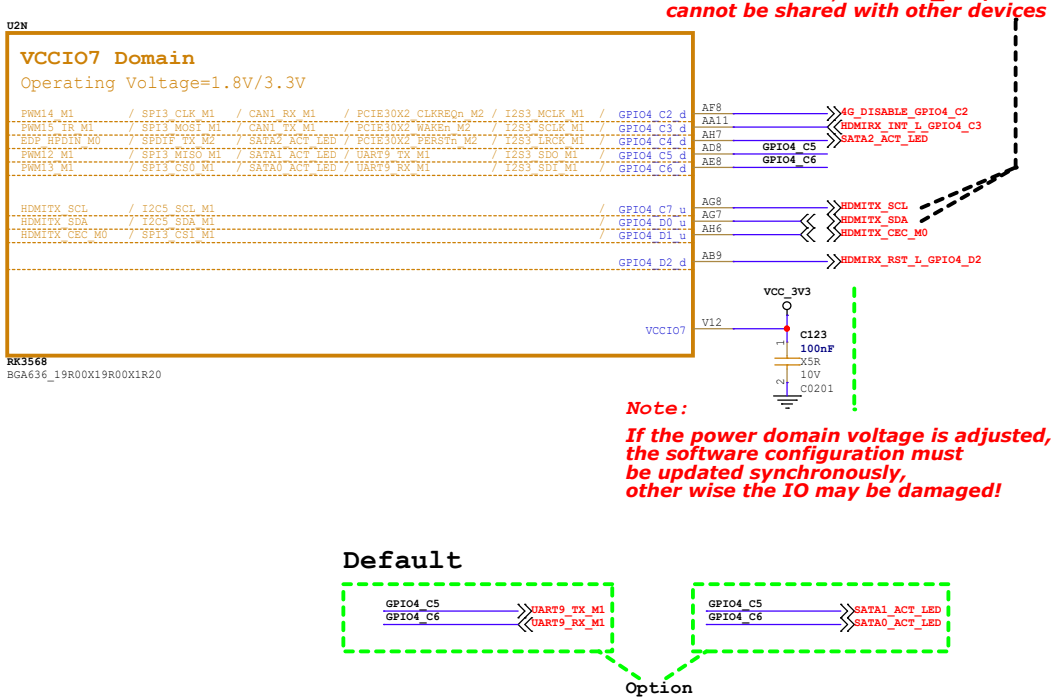

RK3568_O(SARADC/OTP)

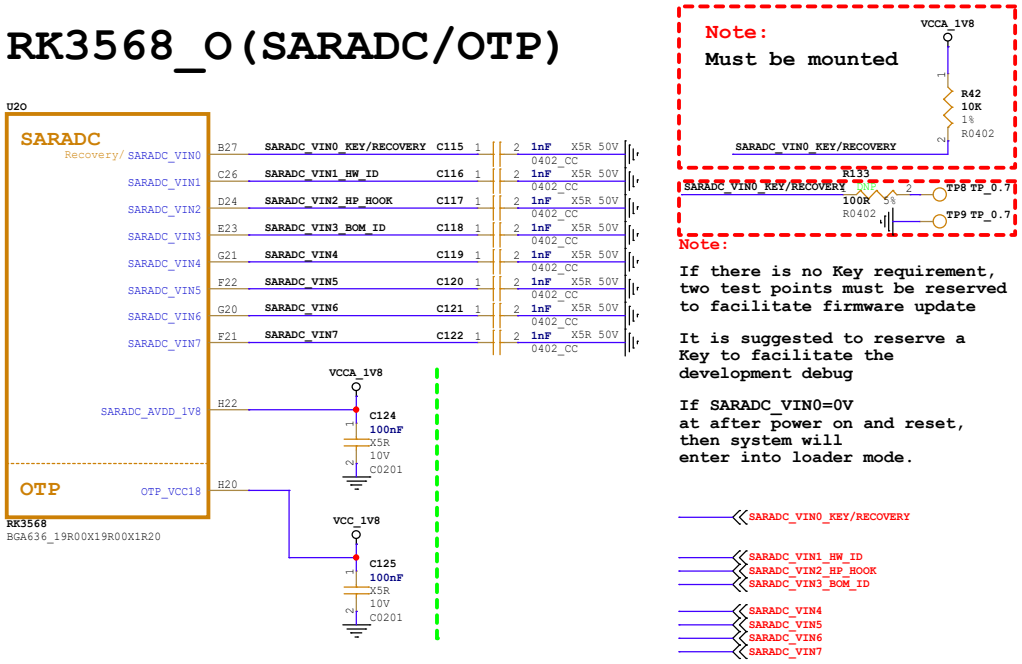

TOPEET 迅为 北京迅为电子有限公司					
Project:	iTOP-3568				
File:	TOPEET_RK3568_LPDDR4_V1_1				
Date:	Friday, November 20, 2020			Rev:	V1.1
Designed by:	TOPEET	Reviewed by:	TOPEET	Sheet:	16 of 27

Rockchip Confidential

RK3568_P(MIPI_CSI_RX)

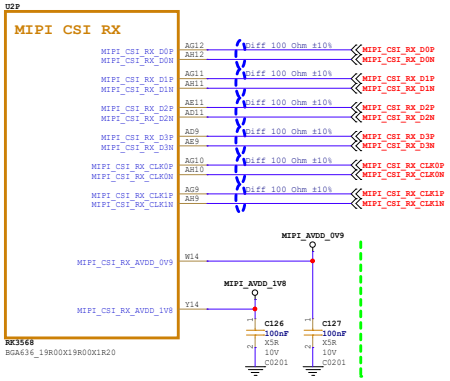

Option1	Sensor1 x4Lane	MIPI_CSI_RX_D0-3 MIPI_CSI_RX_CLK0
Option2	Sensor1 x2Lane + Sensor2 x2Lane	MIPI_CSI_RX_D0-1 MIPI_CSI_RX_CLK0
		MIPI_CSI_RX_D2-3 MIPI_CSI_RX_CLK1

RK3568_M(VCCIO6 Domain)

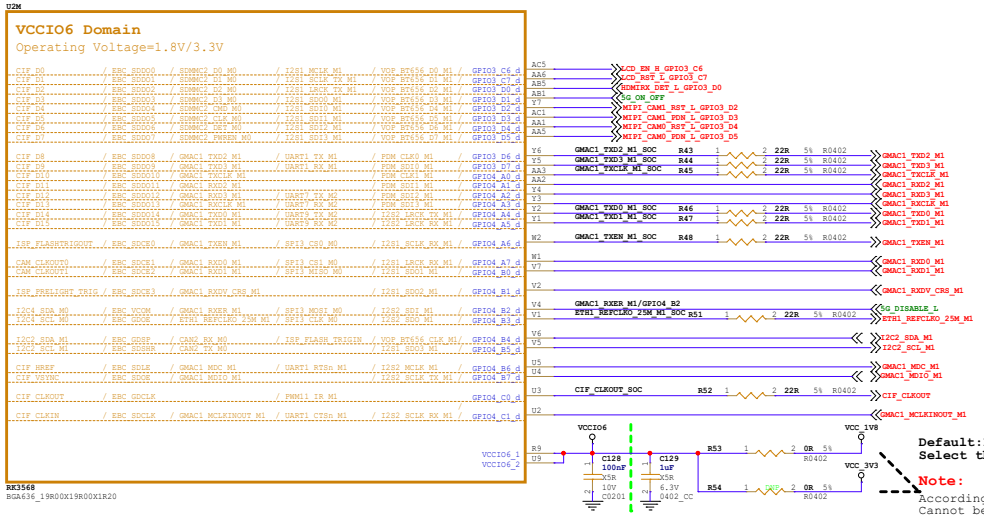

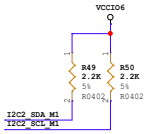

Mode	16bit	12bit	10bit	8bit
CIF_D0	D0	--	--	--
CIF_D1	D1	--	--	--
CIF_D2	D2	--	--	--
CIF_D3	D3	--	--	--
CIF_D4	D4	D0	--	--
CIF_D5	D5	D1	--	--
CIF_D6	D6	D2	D0	--
CIF_D7	D7	D3	D1	--
CIF_D8	D8	D4	D2	D0
CIF_D9	D9	D5	D3	D1
CIF_D10	D10	D6	D4	D2
CIF_D11	D11	D7	D5	D3
CIF_D12	D12	D8	D6	D4
CIF_D13	D13	D9	D7	D5
CIF_D14	D14	D10	D8	D6
CIF_D15	D15	D11	D9	D7

Support BT601 YCbCr 422 8bit input
Support BT656 YCbCr 422 8bit input
Support RAW 8/10/12bit input
Support BT1120 YCbCr 422 8/10/12/16bit input, single/dual-edge sampling
Support 2/4 mixed BT656/BT1120 YCbCr 422 8bit input

BT1120 16bit Mode:
Default: D0-D7 <--> Y0-Y7 , D8-D15 <--> C0-C7
Swap ON: D0-D7 <--> C0-C7 , D8-D15 <--> Y0-Y7

Note:
Caps of between dashed green lines and U1000
should be placed under the U1000 package.
Other caps should be placed close to the U1000 package

Note:
If the power domain voltage is adjusted,
the software configuration must
be updated synchronously,
other wise the IO may be damaged!

Default:1.8V
Select the voltage according to the application

Note:
According to the actual choice of mounted
Cannot be mounted at the same time

Note:
Camera MCLK can select the following clock:
1:CAM_CLKOUT0
2:CAM_CLKOUT1
3:CIF_CLKOUT
4:REFCLK_OUT

Attention to the voltage matching

GMAC	Direction	GEPHY	GMAC	Direction	FEPHY
GMACx_TXD0	------>	PHYx_TXD0	GMACx_TXD0	------>	PHYx_TXD0
GMACx_TXD1	------>	PHYx_TXD1	GMACx_TXD1	------>	PHYx_TXD1
GMACx_TXD2	------>	PHYx_TXD2			
GMACx_TXD3	------>	PHYx_TXD3			
GMACx_TXEN	------>	PHYx_TXEN	GMACx_TXEN	------>	PHYx_TXEN
GMACx_TXCLK	------>	PHYx_TXCLK			
GMACx_RXD0	<------	PHYx_RXD0	GMACx_RXD0	<------	PHYx_RXD0
GMACx_RXD1	<------	PHYx_RXD1	GMACx_RXD1	<------	PHYx_RXD1
GMACx_RXD2	<------	PHYx_RXD2			
GMACx_RXD3	<------	PHYx_RXD3			
GMACx_RXDV	<------	PHYx_RXDV	GMACx_RXDV	<------	PHYx_RXDV
GMACx_RXCLK	<------	PHYx_RXCLK			
GMACx_RXER			GMACx_RXER	<------	PHYx_RXER
GMACx_MDC	------>	PHYx_MDC	GMACx_MDC	------>	PHYx_MDC
GMACx_MDIO	<------>	PHYx_MDIO	GMACx_MDIO	<------>	PHYx_MDIO
ETHx_REFCLKO_25M	------>	PHYx_XTALIN			
GMACx_MCLKINOUT	<------	PHYx_CLKOUT125(Option)	GMACx_MCLKINOUT	------>	PHYx_XTALIN/REFCLK
GPIO	------>	PHYx_RSTn	GPIO	------>	PHYx_RSTn
GPIO	<------	PHYx_INT/PMEB	GPIO	<------	PHYx_INT/PMEB

Rockchip Confidential

TOPEET 迅为 北京迅为电子有限公司
Project: ITOP-3568
File: TOPEET_RK3568_LPDDR4_V1_1
Date: Friday, November 20, 2020 Rev: V1.1
Designed by: TOPEET Reviewed by: TOPEET Sheet: 17 of 27

RK3568_R(MIPI_DSI_TX0/LVDS_TX0)

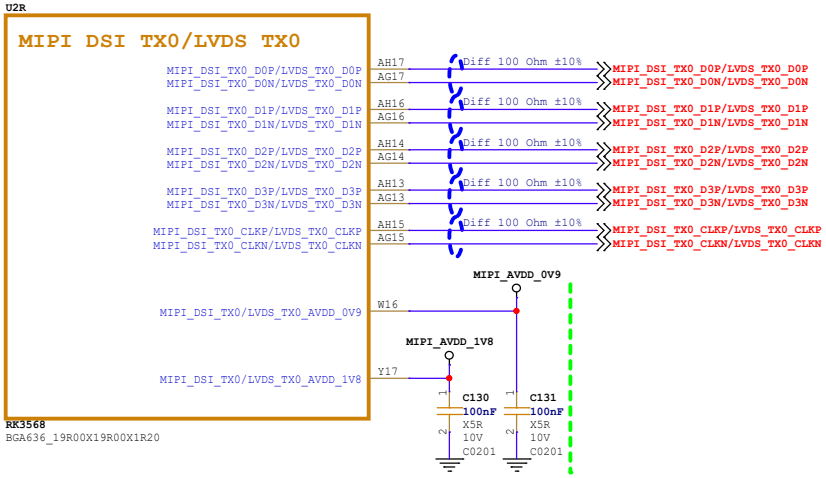

RK3568_S(MIPI_DSI_TX1/LVDS_TX1)

Note:
Add LVDS_TX1 function

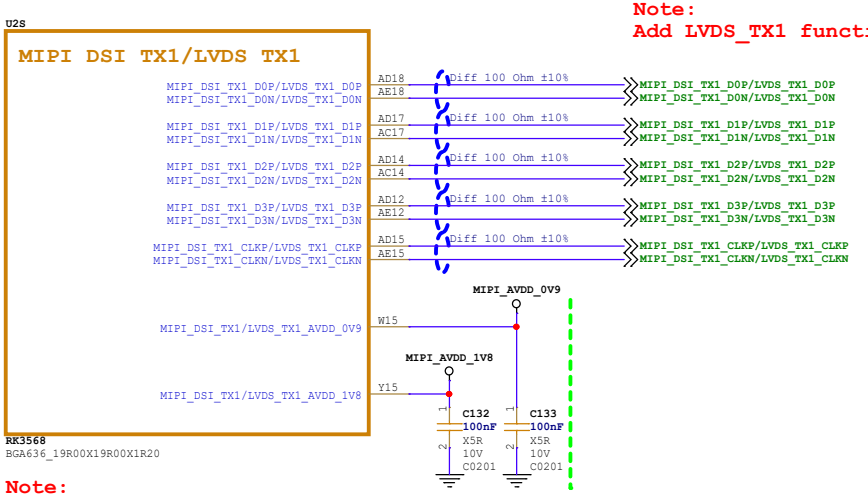

Note:

MIPI_DSI_TX0 + MIPI_DSI_TX1 support dual MIPI DSI TX interface,
Left and Right support redistribution.

LVDS_TX0 + LVDS_TX1 support dual LVDS TX interface,
Left and Right support redistribution

RK3568_T(eDP TX)

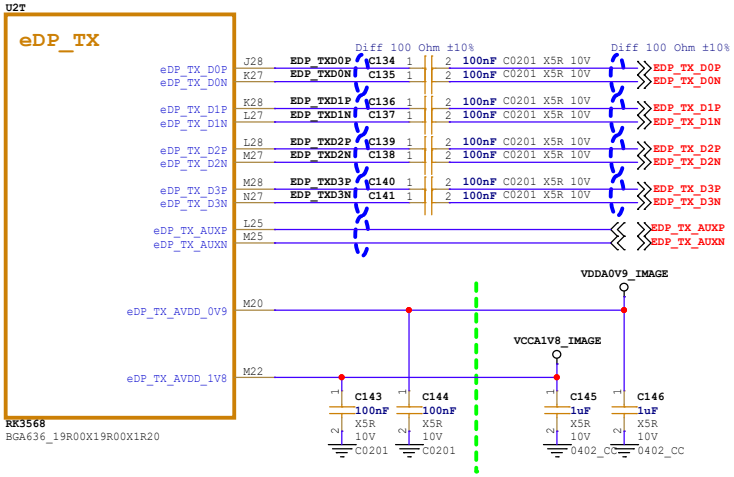

Note:
Caps of between dashed green lines and U1000
should be placed under the U1000 package.
Other caps should be placed close to the U1000 package

RK3568_Q(HDMI2.0 TX)

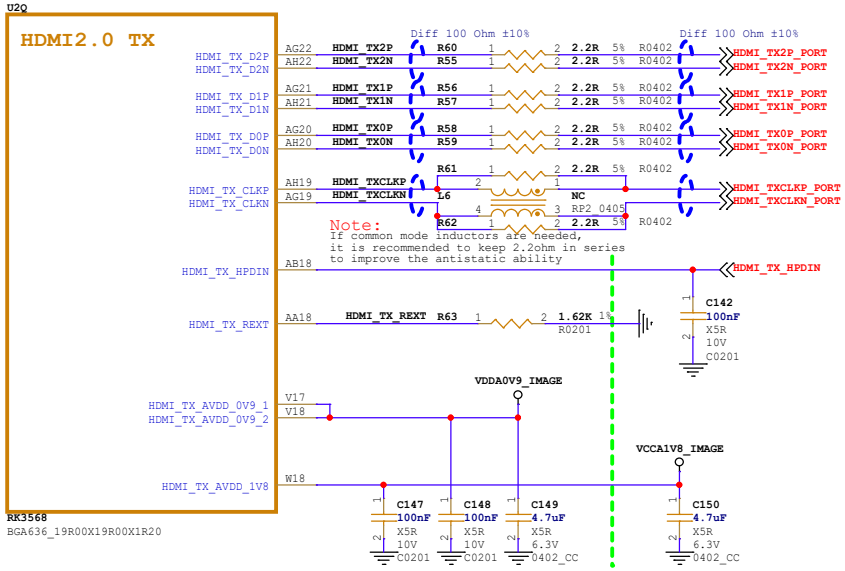

Note:
If common mode inductors are needed,
it is recommended to keep 2.2ohm in series
to improve the antistatic ability

Rockchip Confidential

TOPEET 迅为 北京迅为电子有限公司					
Project:	iTOP-3568				
File:	TOPEET_RK3568_LPDDR4_V1_1				
Date:	Friday, November 20, 2020			Rev:	V1.1
Designed by:	TOPEET	Reviewed by:	TOPEET	Sheet:	18 of 27

RK3568_L(VCCIO5 Domain)

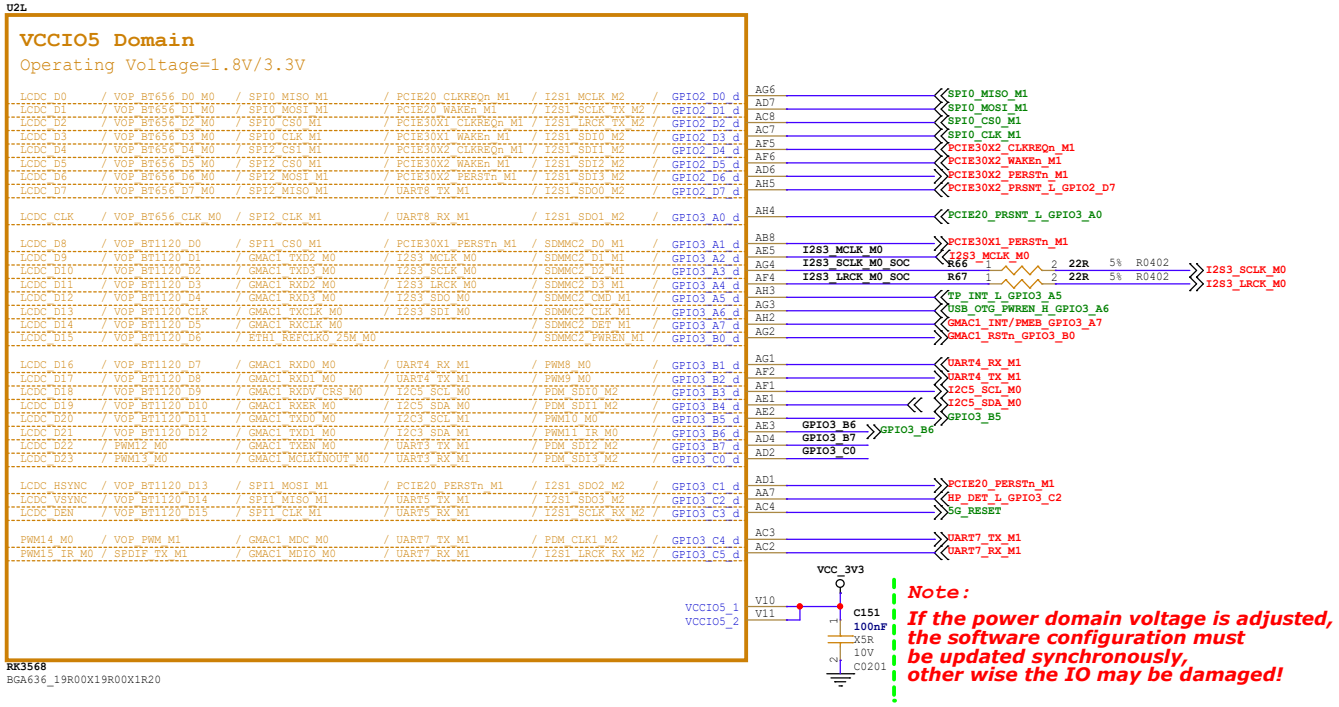

Note:

If the power domain voltage is adjusted, the software configuration must be updated synchronously, other wise the IO may be damaged!

Default
PCIe slot

GPIO3_B6 — PCIE20_PRSNT_L_GPIO3_B6

PCIe Ethernet

GPIO3_B6 — PCIE_ETH_ISOLATE_L_GPIO3_B6

Option

Default

GPIO3_B7 — UART3_TX_M1
GPIO3_C0 — UART3_RX_M1

GPIO3_B7 — GMAC0_RSTn_GPIO3_B7
GPIO3_C0 — GMAC0_INT/PMEB_GPIO3_C0

Option

Note:

Caps of between dashed green lines and U1000 should be placed under the U1000 package

Rockchip Confidential

TOPEET 迅为 北京迅为电子有限公司			
Project:	iTOP-3568		
File:	TOPEET_RK3568_LPDDR4_V1_1		
Date:	Friday, November 20, 2020	Rev:	V1.1
Designed by: TOPEET	Reviewed by: TOPEET	Sheet:	19 of 27

RK3568_H(VCCIO1 Domain)

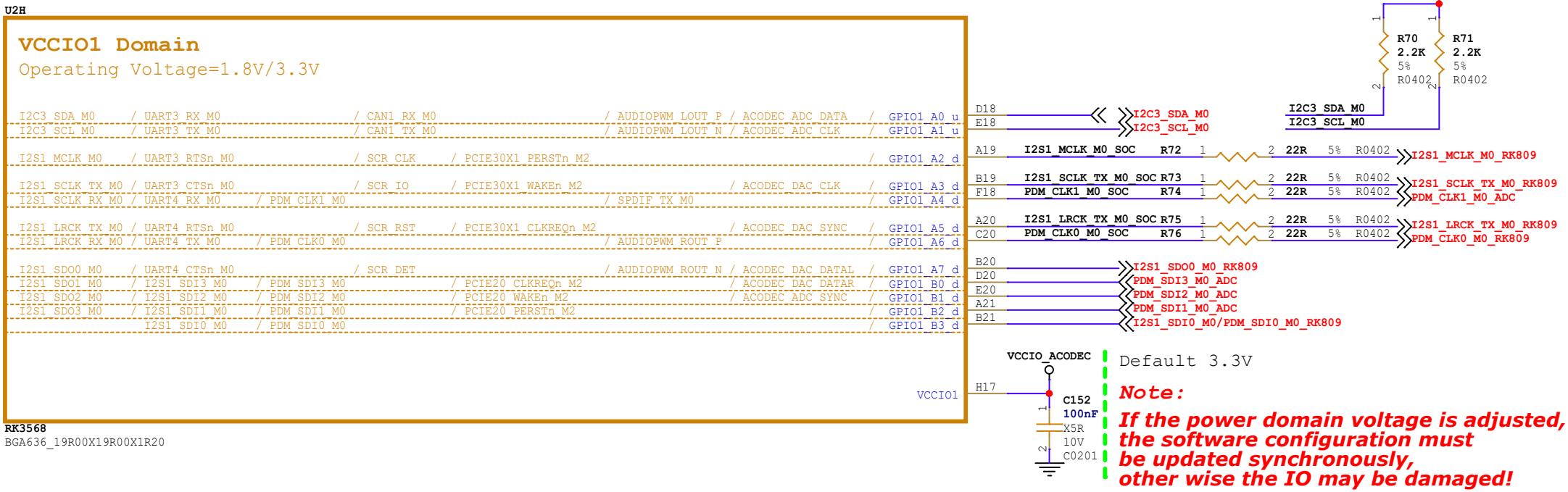

Note:
Caps of between dashed green lines and U1000 should be placed under the U1000 package

Rockchip Confidential

TOPEET 迅为 北京迅为电子有限公司					
Project:	iTOP-3568				
File:	TOPEET_RK3568_LPDDR4_V1_1				
Date:	Friday, November 20, 2020			Rev:	V1.1
Designed by:	TOPEET	Reviewed by:	TOPEET	Sheet:	20 of 27

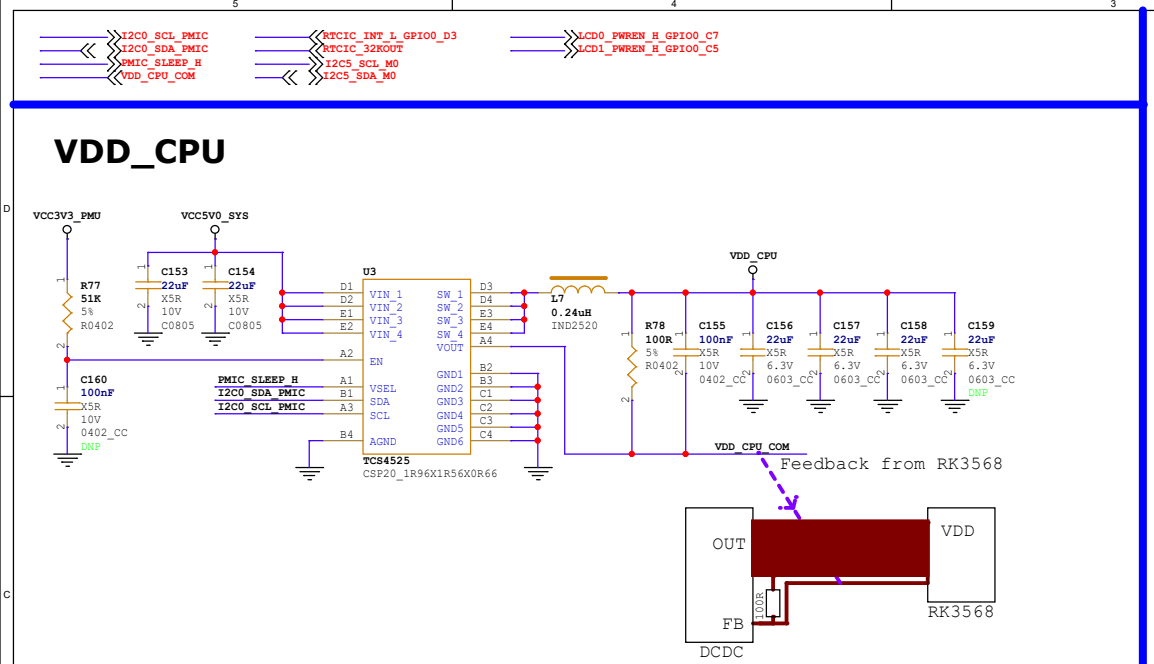

VDD_CPU

Rockchip Confidential

TOPEET 迅为 北京迅为电子有限公司			
Project:	iTOP-3568		
File:	TOPEET_RK3568_LPDDR4_V1_1		
Date:	Friday, November 20, 2020	Rev:	V1.1
Designed by: TOPEET	Reviewed by: TOPEET	Sheet:	21 of 27

FLASH_VOL_SEL

Flash Power Manage

	VCCIO2 domain voltage: Recommend voltage value (VCCIO_FLASH)	FLASH_VOL_SEL state decided to VCCIO2 domain IO driven by default
eMMC	1.8V	FLASH_VOL_SEL --> Logic=H
Nand flash	Default 3.3V, Optional 1.8V	FLASH_VOL_SEL --> Logic=L(Default)
SPI flash	Default 1.8V, Optional 3.3V	FLASH_VOL_SEL --> Logic=H(Default)

Note:

According to the actual choice of mounted
Cannot be mounted at the same time

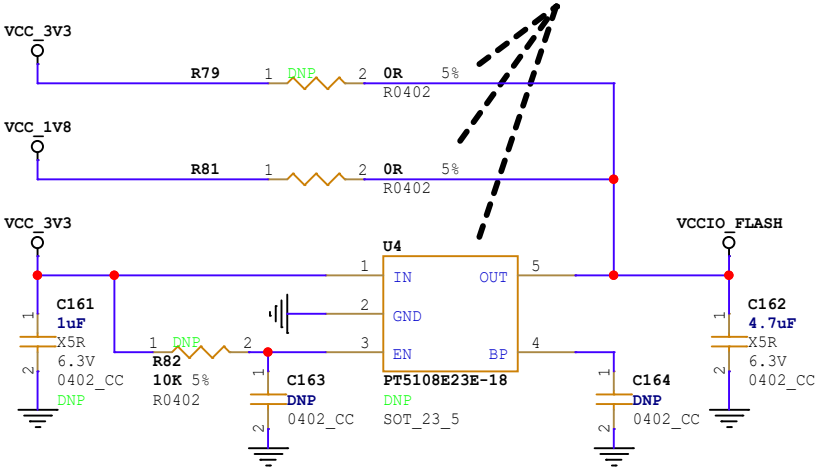

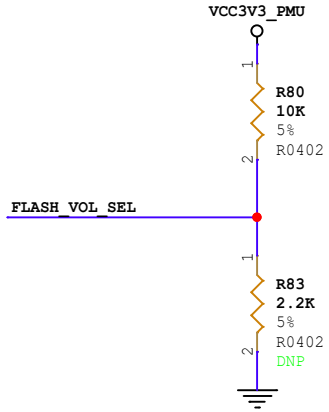

Note:
FLASH_VOL_SEL state decided
to VCCIO2 domain IO driven by default
Logic=L: 3.3V IO driven
Logic=H: 1.8V IO driven

Rockchip Confidential

TOPEET 迅为 北京迅为电子有限公司					
Project:	iTOP-3568				
File:	TOPEET_RK3568_LPDDR4_V1_1				
Date:	Friday, November 20, 2020			Rev:	V1.1
Designed by:	TOPEET	Reviewed by:	TOPEET	Sheet:	22 of 27

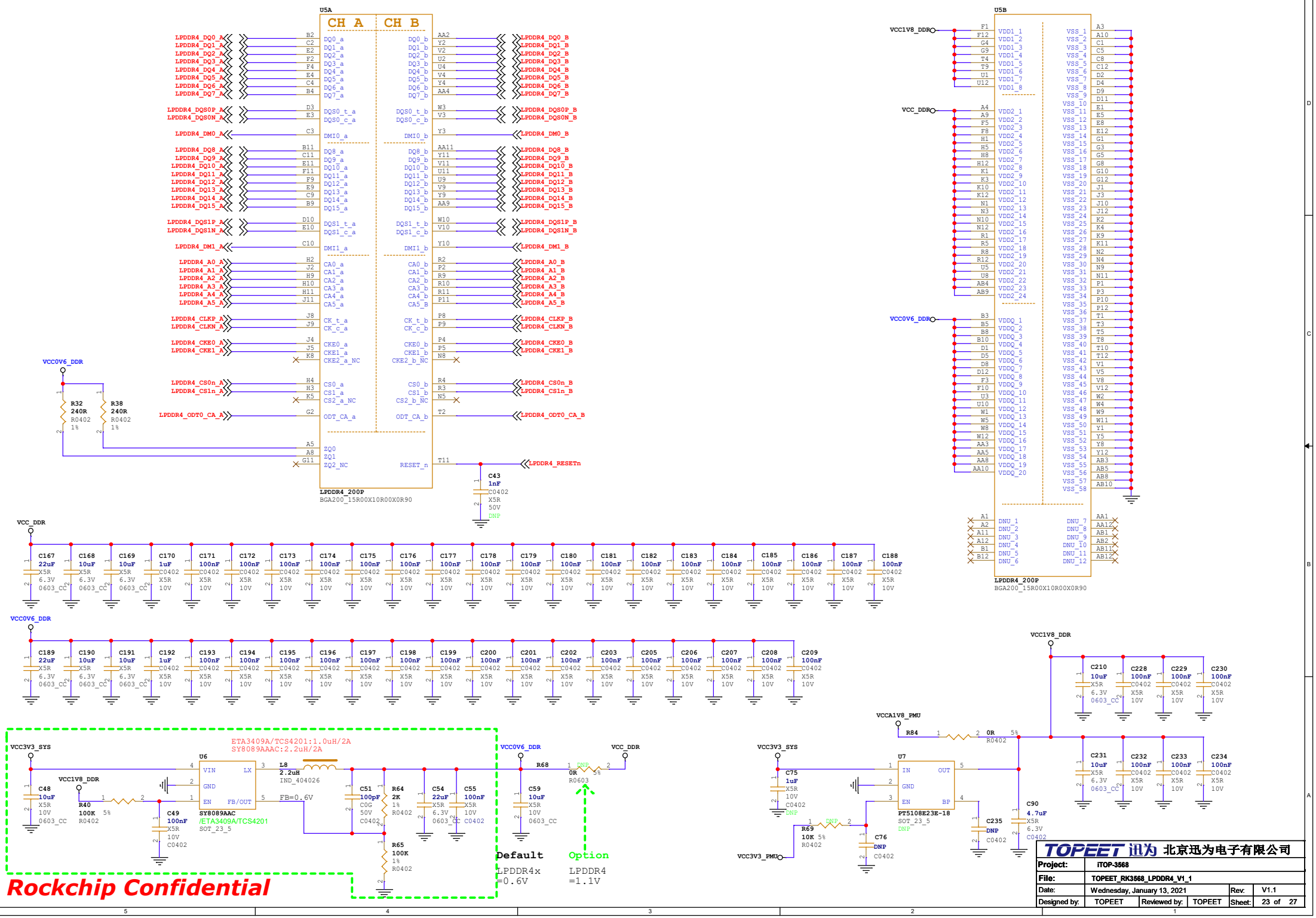
U5A
CH A
CH B
LPDDR4_200P
BGA200_15R00X10R00X0R90
U5B
LPDDR4_200P
BGA200_15R00X10R00X0R90
VCC1V8_DDR
VCC_DDR
VCC0V6_DDR
R32 240R R0402 1%
R38 240R R0402 1%
C43 1nF C0402 X5R 50V DNP
ETA3409A/TCS4201:1.0uH/2A
SY8089AAAC:2.2uH/2A
U6
SY8089AAC /ETA3409A/TCS4201 SOT_23_5
L8 2.2uH IND_404026
FB=0.6V
R40 100K 5% R0402
R64 2K 1% R0402
R65 100K 1% R0402
R68 0R R0603
Default
LPDDR4x =0.6V
Option
LPDDR4 =1.1V
VCCA1V8_PMU
R84 0R R0402
U7
PT5108E23E-18 SOT_23_5
VCC3V3_SYS
VCC3V3_PMU
R69 10K 5% R0402
Rockchip Confidential
TOPEET 迅为 北京迅为电子有限公司
Project: iTOP-3568
File: TOPEET_RK3568_LPDDR4_V1_1
Date: Wednesday, January 13, 2021
Rev: V1.1
Designed by: TOPEET
Reviewed by: TOPEET
Sheet: 23 of 27

eMMC Flash

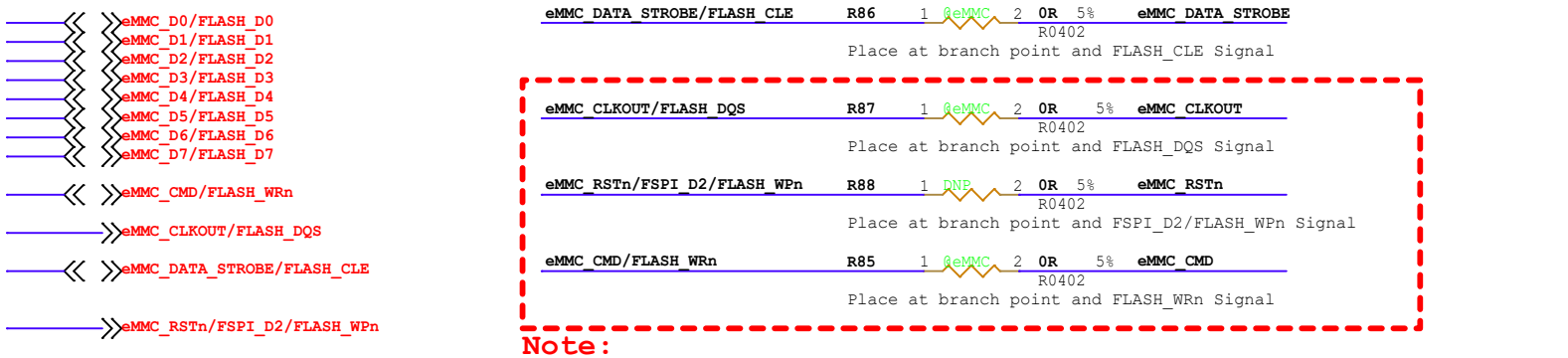

Note:

No need to double layout with Nand Flash, 0R resistor can be omitted

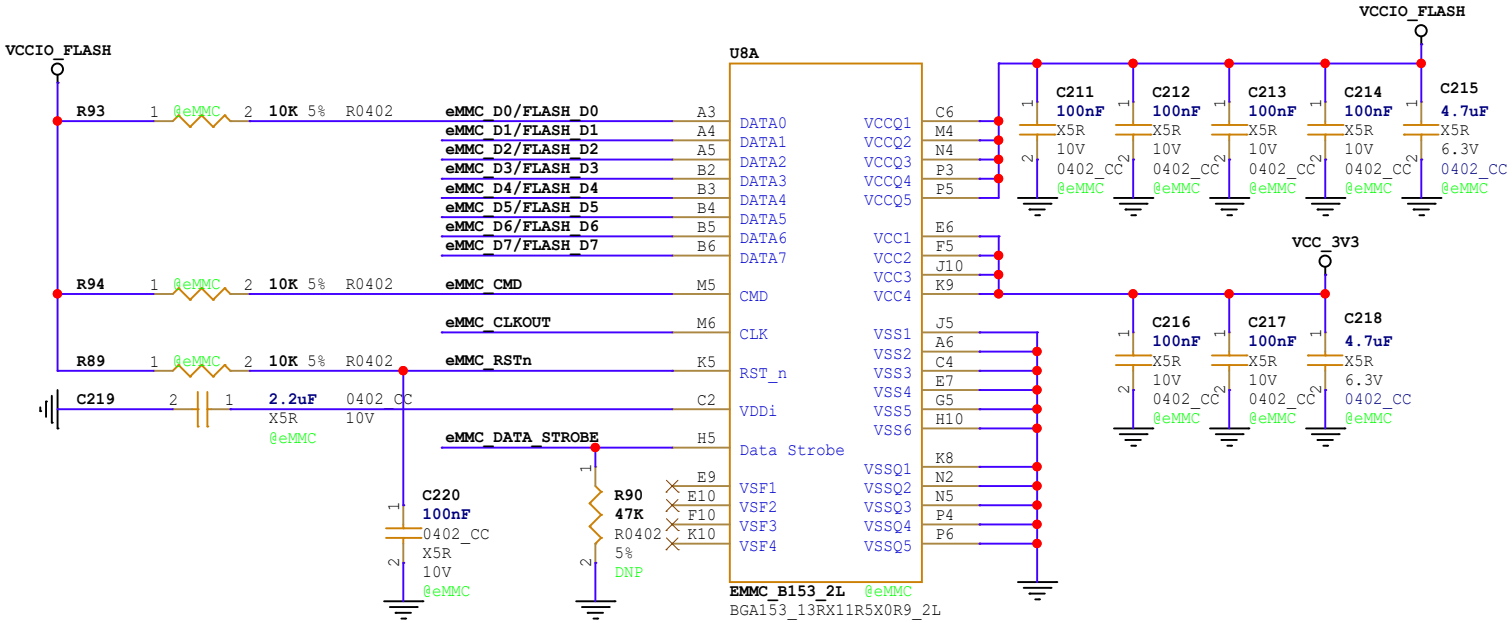

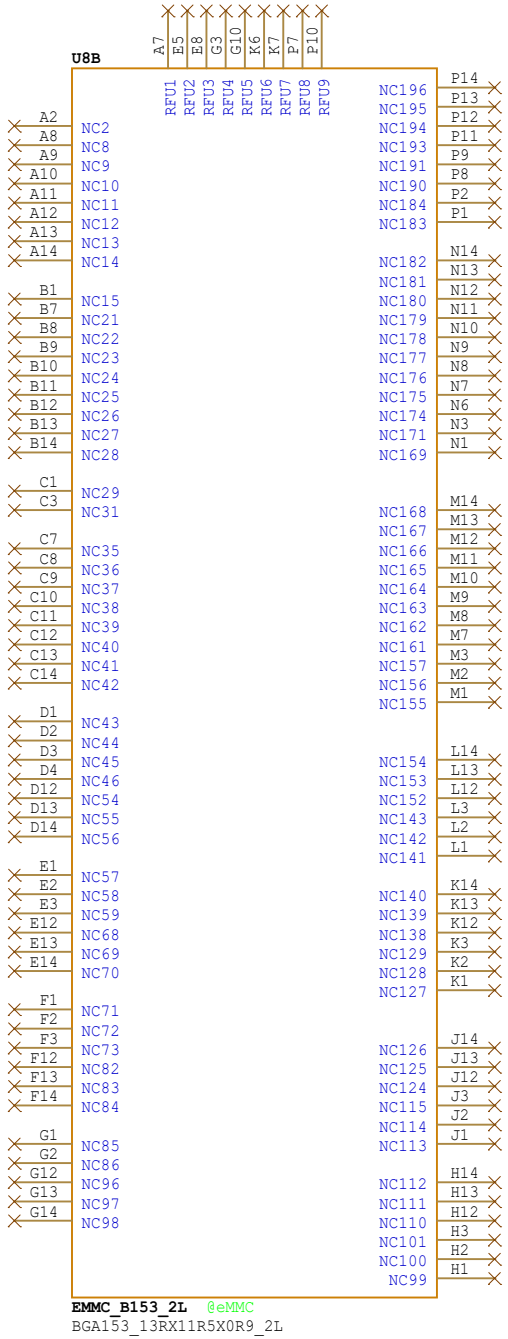

Note:

If Flash is compatible, please notice
when eMMC is used, the option is that @eMMC is mounted, @Nand is not mounted,@SPI Flash is not mounted
when Nand is used, the option is that @Nand is mounted, @eMMC is not mounted,@SPI Flash is not mounted
when SPI Flash is used, the option is that SPI Flash is mounted, @eMMC is not mounted,@Nand is not mou

Rockchip Confidential

TOPEET 迅为 北京迅为电子有限公司					
Project:	iTOP-3568				
File:	TOPEET_RK3568_LPDDR4_V1_1				
Date:	Friday, November 20, 2020			Rev:	V1.1
Designed by:	TOPEET	Reviewed by:	TOPEET	Sheet:	24 of 27

SPI Flash

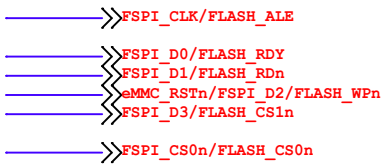

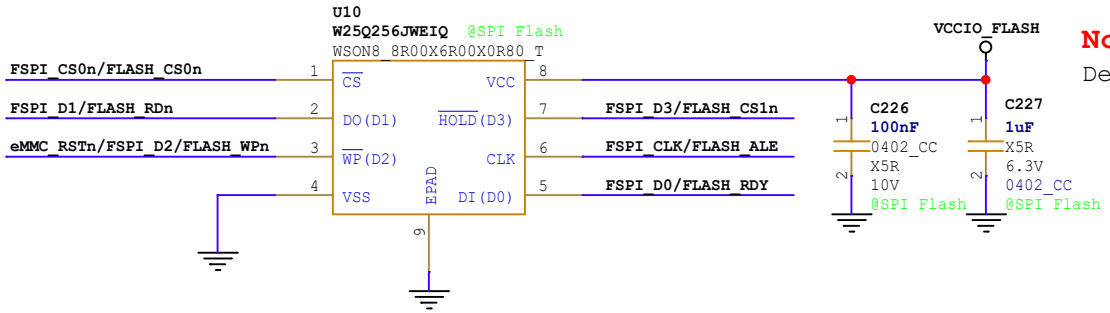

Note:

Default: 1.8V

Support:
1bit SPI NOR or SPI NAND
4bit SPI NOR or SPI NAND

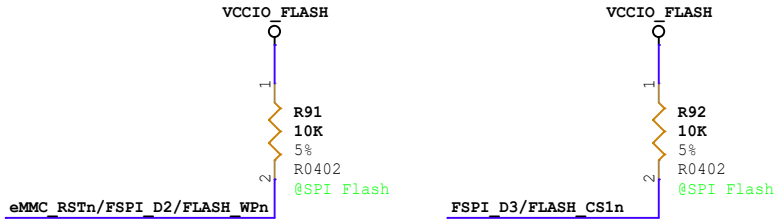

Note:

If Flash is compatible, please notice
when eMMC is used, the option is that @eMMC is mounted, @Nand is not mounted,@SPI Flash is not mounted
when Nand is used, the option is that @Nand is mounted, @eMMC is not mounted,@SPI Flash is not mounted
when SPI Flash is used, the option is that SPI Flash is mounted, @eMMC is not mounted,@Nand is not mounted

Rockchip Confidential

TOPEET 迅为 北京迅为电子有限公司					
Project:	iTOP-3568				
File:	TOPEET_RK3568_LPDDR4_V1_1				
Date:	Friday, November 20, 2020			Rev:	V1.1
Designed by:	TOPEET	Reviewed by:	TOPEET	Sheet:	25 of 27

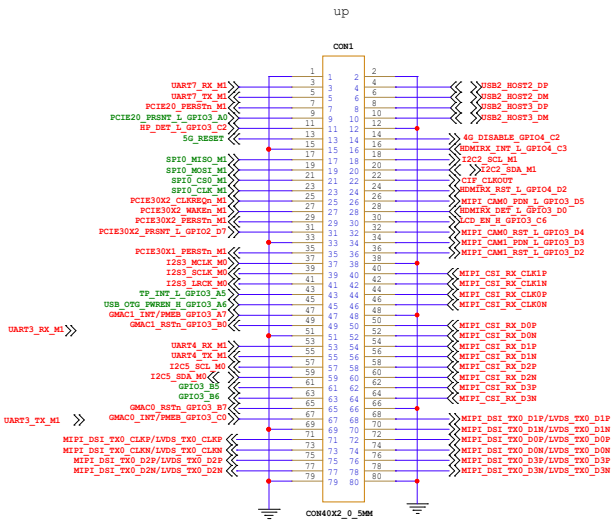

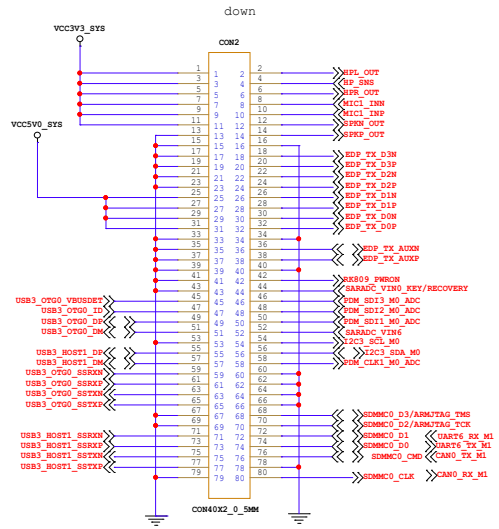

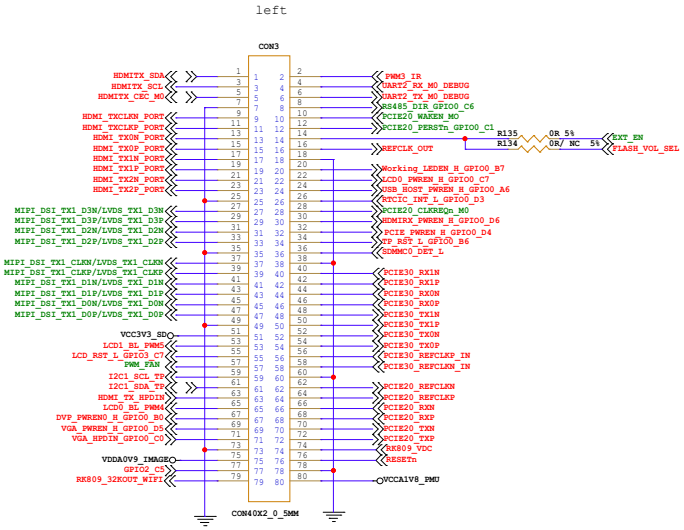

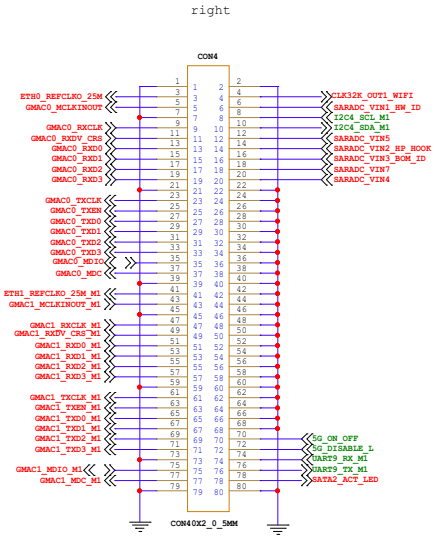

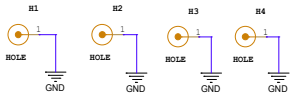

TOPEET 迅为 北京迅为电子有限公司					
Project:	ITOP-3568				
File:	TOPEET_RK3568_LPDDR4_V1_1				
Date:	Friday, November 20, 2020			Rev:	V1.1
Designed by:	TOPEET	Reviewed by:	TOPEET	Sheet:	26 of 27

REF Schematic for RK3568

Main Functions Introduction

```
 1)PMIC: RK809-5+DiscretePower
 2)RAM:  DDR4 2x16Bit------------------Default
  Option:LPDDR4/4x 1X32bit(200ball)
  Option:DDR3 4x16bit
  Option:DDR3 4x16bit+2x16bit ECC
  Option:DDR4 2x16bit+1x16bit ECC
  Option:LPDDR3 1x32bit(178ball)
  Option:DDR4 4x16bit
 3)ROM:  eMMC---------------------------Default
  Option:Nand Flash
  Option:SPI Falsh
 4)Support:1 x Micro SD Card3.0
 5)Support:1 x USB3.0 OTG0 + 1 x USB3.0 HOST1   + 1 x SATA3.0 Port2 -----------------------------------------------------Default
    Option:1 x USB3.0 OTG0 + 1 x USB3.0 HOST1   + 1 x 1Lane PCIe2.0(RC Mode)
    Option:1 x USB3.0 OTG0 + 1 x USB2.0 HOST1   + 1 x SATA3.0 Port1 + 1 x SATA3.0 Port2
    Option:1 x USB3.0 OTG0 + 1 x USB2.0 HOST1   + 1 x SATA3.0 Port1 + 1 x 1Lane PCIe2.0(RC Mode)
    Option:1 x USB2.0 OTG0 + 1 x SATA3.0 Port0  + 1 x USB3.0 HOST1  + 1 x SATA3.0 Port2
    Option:1 x USB2.0 OTG0 + 1 x SATA3.0 Port0  + 1 x USB3.0 HOST1  + 1 x 1Lane PCIe2.0(RC Mode)
    Option:1 x USB2.0 OTG0 + 1 x SATA3.0 Port0  + 1 x USB2.0 HOST1  + 1 x SATA3.0 Port1 + 1 x SATA3.0 Port2
    Option:1 x USB2.0 OTG0 + 1 x SATA3.0 Port0  + 1 x USB2.0 HOST1  + 1 x SATA3.0 Port1 + 1 x 1Lane PCIe2.0(RC Mode)
 6)Support:1 x USB2.0 HOST2+ 1 x USB2.0 HOST3 -- ------Default
 7)Support:4G module Via MiniPCIe2.0 Slot With PCIE2.0 and USB2.0 HOST3 function ------Option
 8)Support:2 x 1Lane PCIe3.0 Connector (RC Mode) ------Default
    Option:1 x 2Lanes PCIe3.0 Connector (RC Mode)
    Option:1 x 2Lanes PCIe3.0 Connector (EP Mode)
 9)Support:1 x HDMI2.0 TX
10)Support:1 x LCM MIPI DSI TX0 -----------------------Default
    Option:1 x LCM MIPI DSI TX1
    Option:1 x LCM LVDS TX
    Option:1 x LCM Dual MIPI DSI TX
    Option:1 x LCM eDP TX
11)Support:1 x VGA OUT --------------------------------Default
12)Support:1 x 4Lanes Camera MIPI CSI RX --------------Default
    Option:2 x 2Lanes Camera MIPI CSI RX
    Option:1 x HDMI1.4 RX(HDMI to MIPI CSI)
13)Support:a/b/g/n/ac 2X2 SDIO WIFI5+BT5.0+PCM --------Default
    Option:a/b/g/n/ac 1X1 SDIO WIFI+BT+PCM
    Option:a/b/g/n/ac/ax 2X2 PCIe WIFI6+BT5.0+PCM
14)Support:1 x 10/100/1000 Ethernet(RGMII1_M1)  -------Default
    Option:1 x 10/100/1000 Ethernet(RGMII0)
    Option:1 x 10/100/1000 PCIe Ethernet Card
15)Support:1 x Headphone output -----------------------Default
16)Support:1 x ECM MIC  + 1 x Speaker out -------------Default
    Option:4 x MEMS MIC + 1 x Speaker out + Loopback or 2 x MEMS MIC + 1 x Speaker out + Loopback
    Option:4 x MEMS MIC + 2 x Speaker out + Loopback
17)Support:1 x IR Receiver ----------------------------Default
18)Support:Array Key(MENU,VOL+,VOL-,ESC),Reset,Power on/off Key
19)Support:3 x UART + 1 x RS485 + 1 x CAN FD(Option)
20)Support:Debug UART and ARM JTAG
```

Rockchip Confidential