Revision History

Version	Date	By	Change Dsecription	Approved
V1.0	2020-11-04	TOPEET	1:Revision preliminary version	
V1.1	2021-2-05	TOPEET	1. USB电源、连接器定义	
V1.2	2021-12-06	TOPEET	1.按键丝印、电容封装等	
V1.3	2022-8-06	TOPEET	1.LVDS、MIPI的5V电源加跳线防止插反 2.去掉一路USB3.0给增加的5G，原位置增加风扇。 3.背面引出20PIN贴片插针（2*I2C、1*SPI、2*UART、8*GPIO、2*GND） 4.USB3.0烧写口增加跳线控制ID主从 5.LVDS的I2C更换成与CSI的I2C复用 6.增加PCIE2.0与SATA复用（可通过电阻选择）	
V1.7	2022-9-08	TOPEET	1.优化网口灯 2.修改BOM ID电源	
V1.8	2024-01-17	TOPEET	1.优化电源设计 2.修改连接器引脚定义	
V1.9	2024-02-18	TOPEET	1.优化元件封装	

12V/3A DCIN

VCC5V0_SYS

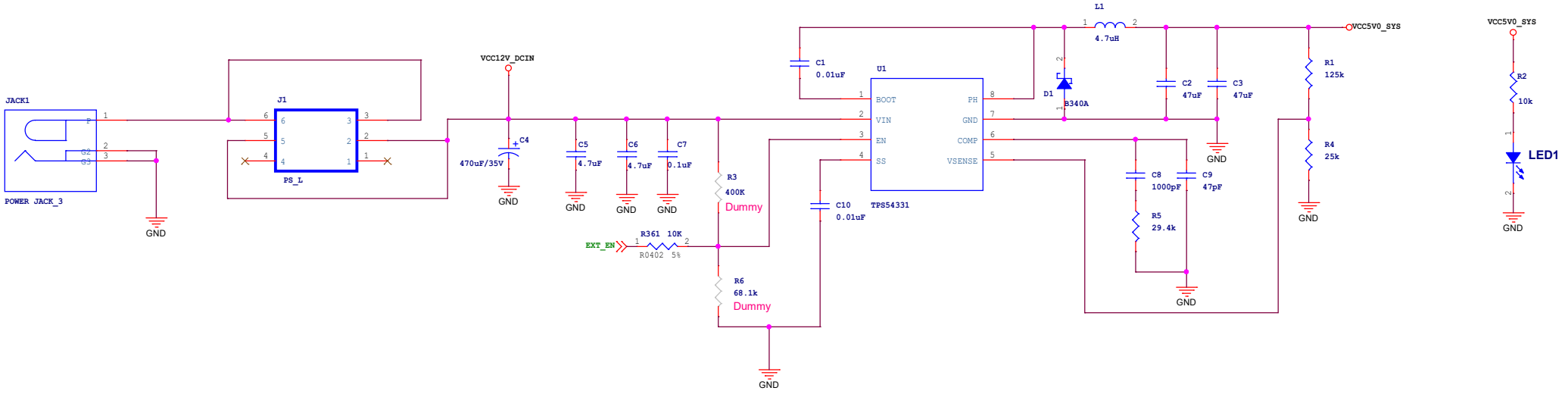

VCC3V3_SYS

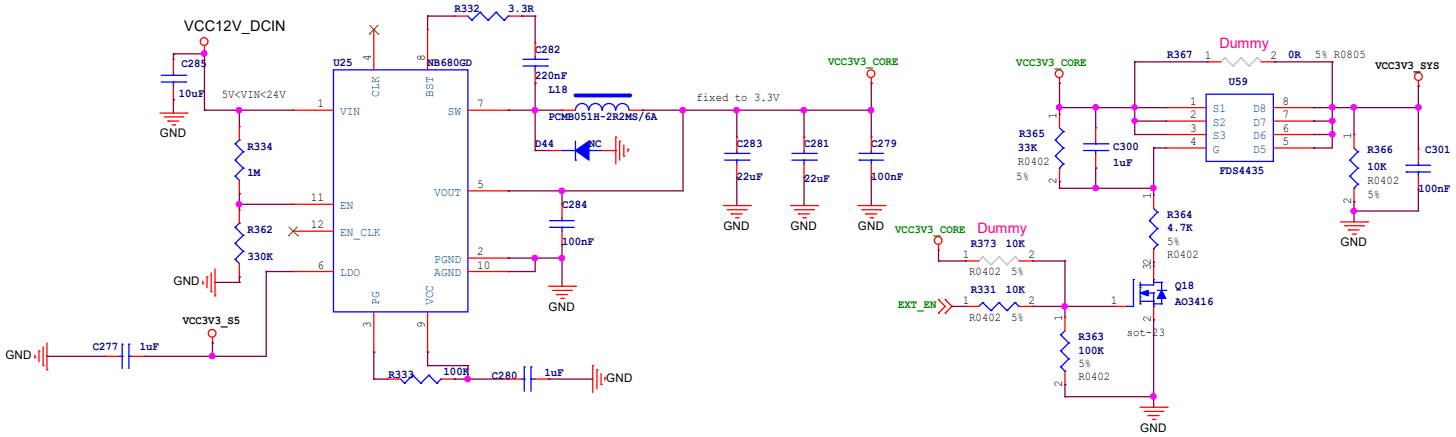

RTC IC

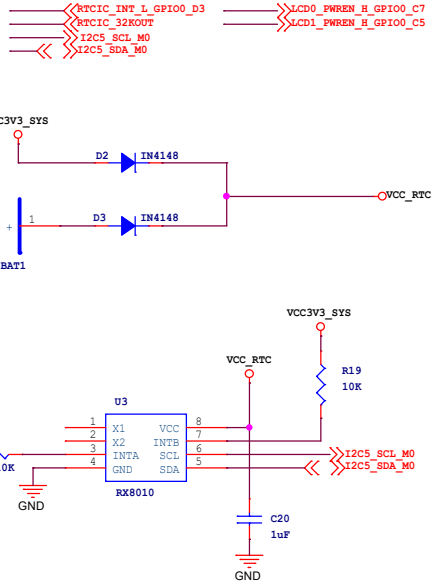

TOPEET 迅为 北京迅为电子有限公司					
Project:	iTOP-3568				
FILE:	TOPEET_RK3568_MAIN_V				
Date:	Friday, November 20, 2020			Rev:	V1.9
Designed by:	TOPEET	Reviewed by:	TOPEET	Sheet:	2 of 18

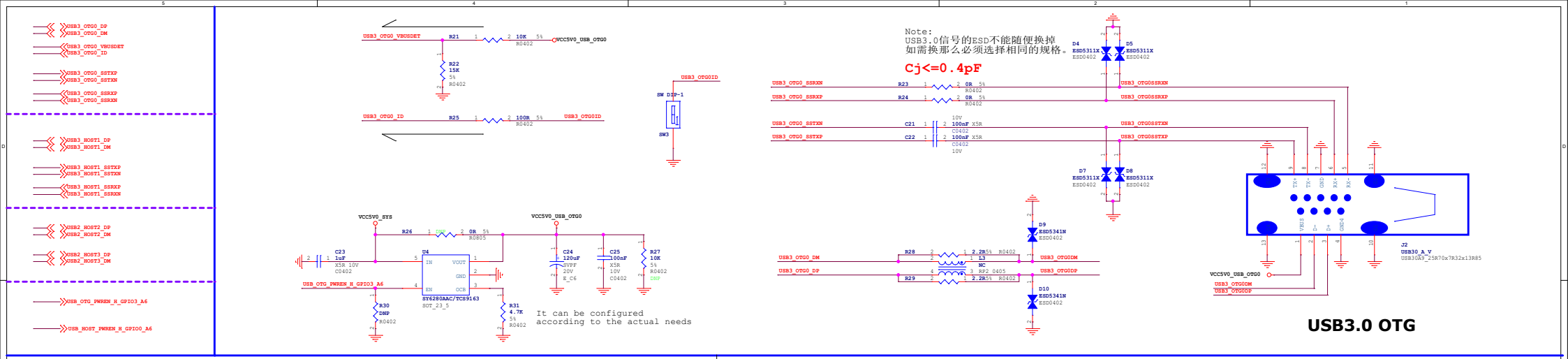

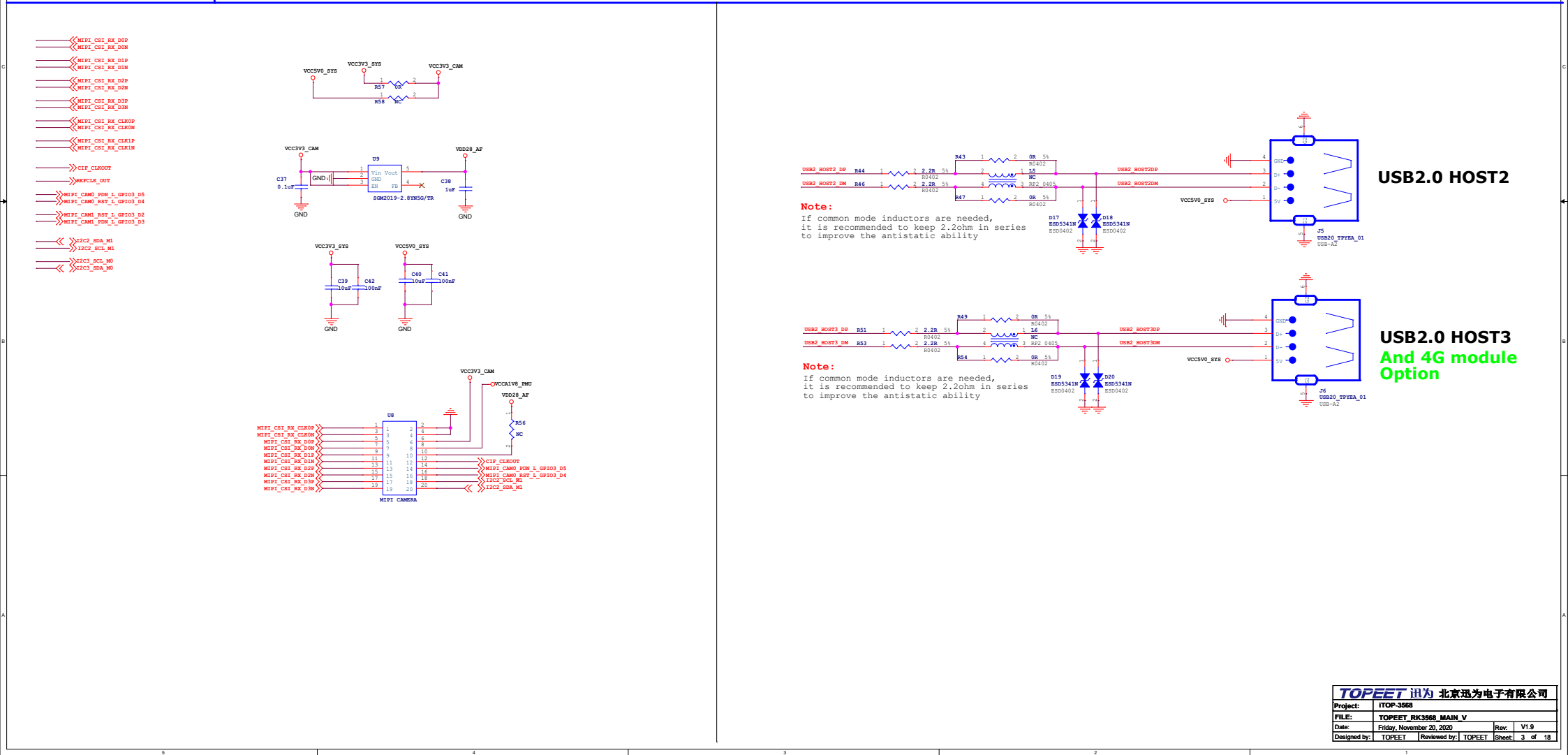

TOPEET 北京迅为电子有限公司			
Project:	iTOP-3568		
FILE:	TOPEET_RK3568_MAIN_V		
Date:	Friday, November 20, 2020	Rev:	V1.9
Designed by: TOPEET	Reviewed by: TOPEET	Sheet:	3 of 18

HDMI2.0 TX

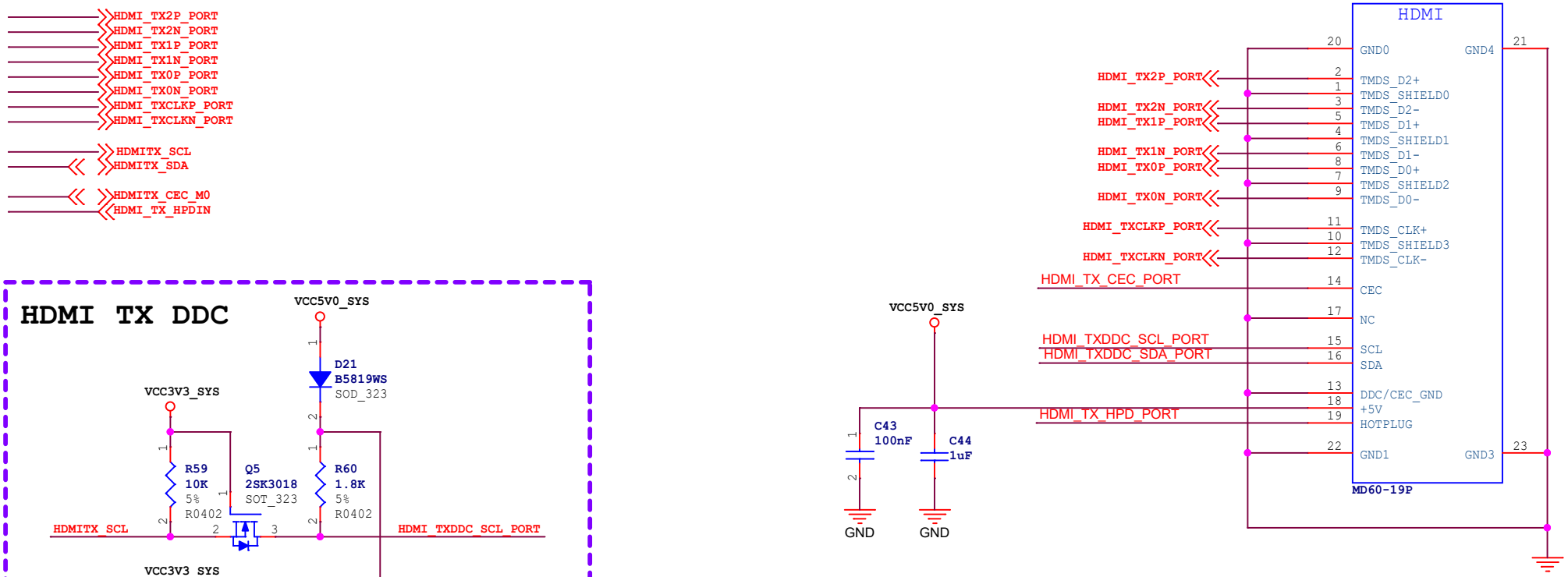

HDMI TX DDC

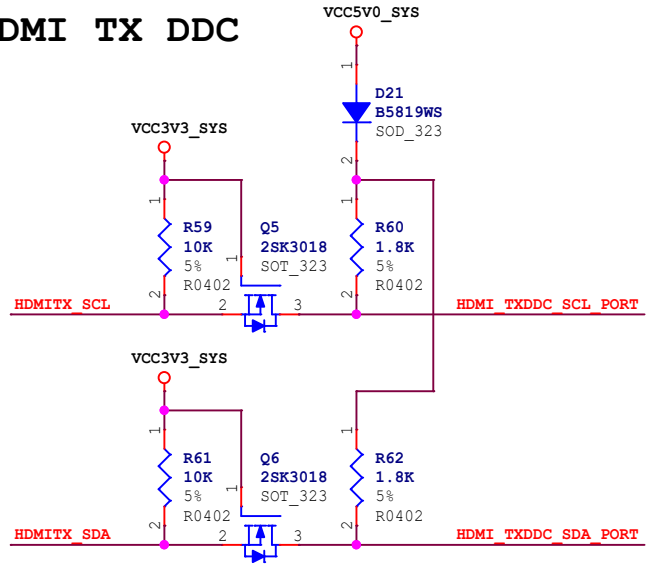

HDMI TX CEC

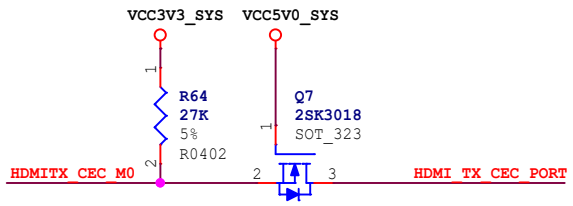

HDMI TX HPD

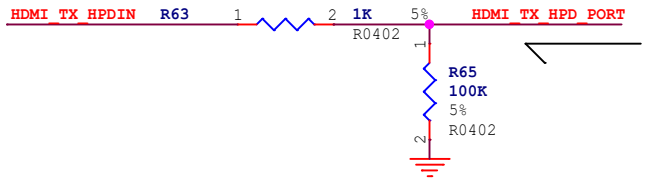

TOPEET 迅为 北京迅为电子有限公司					
Project:	iTOP-3568				
FILE:	TOPEET_RK3568_MAIN_V				
Date:	Friday, November 20, 2020			Rev:	V1.9
Designed by:	TOPEET	Reviewed by:	TOPEET	Sheet:	4 of 18

SDIO WIFI/BT MODULE-2T2R

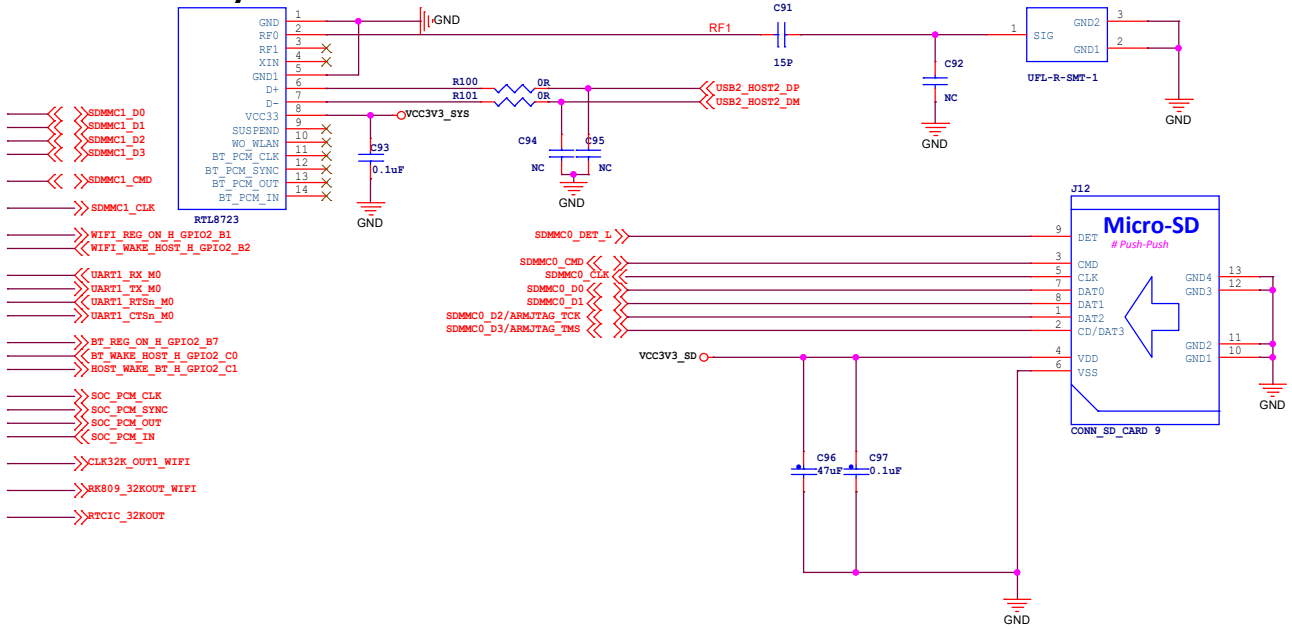

Single- MIPI1 LCM

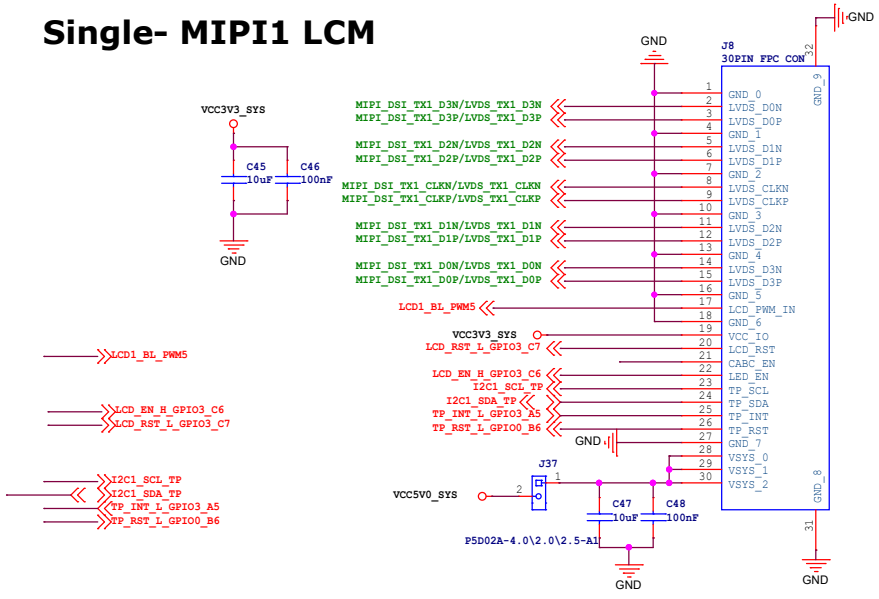

Single-LVDS LCM

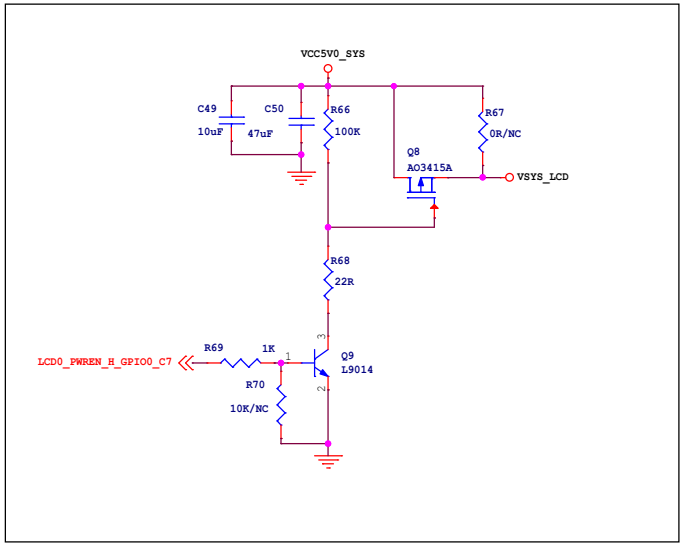

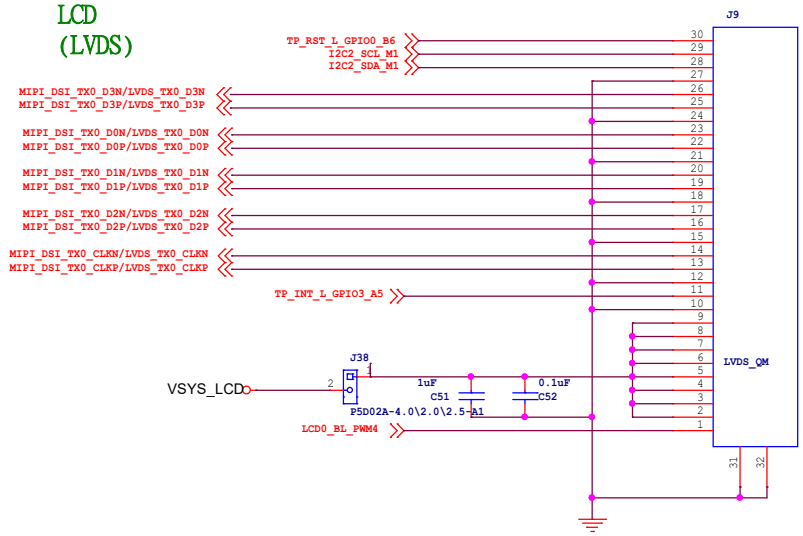

TOPEET 迅为 北京迅为电子有限公司					
Project:	iTOP-3568				
FILE:	TOPEET_RK3568_MAIN_V				
Date:	Tuesday, January 12, 2021			Rev:	V1.9
Designed by:	TOPEET	Reviewed by:	TOPEET	Sheet:	5 of 18

Single-eDP LCM

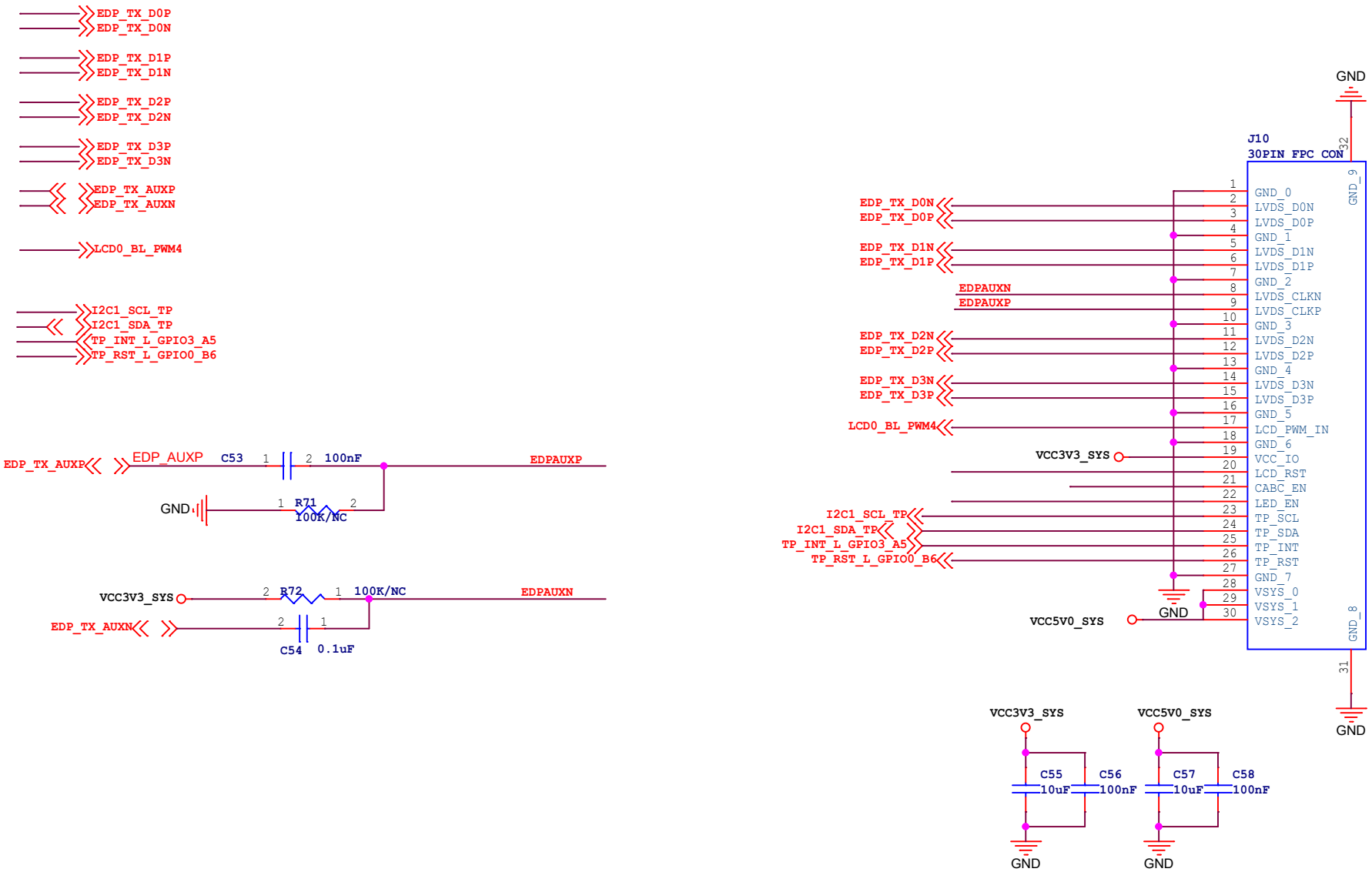

TOPEET 迅为 北京迅为电子有限公司					
Project:	iTOP-3568				
FILE:	TOPEET_RK3568_MAIN_V				
Date:	Tuesday, January 12, 2021			Rev:	V1.9
Designed by:	TOPEET	Reviewed by:	TOPEET	Sheet:	6 of 18

VGA OUT

Default:RTD2166

CH7517,IT6516:Can also support

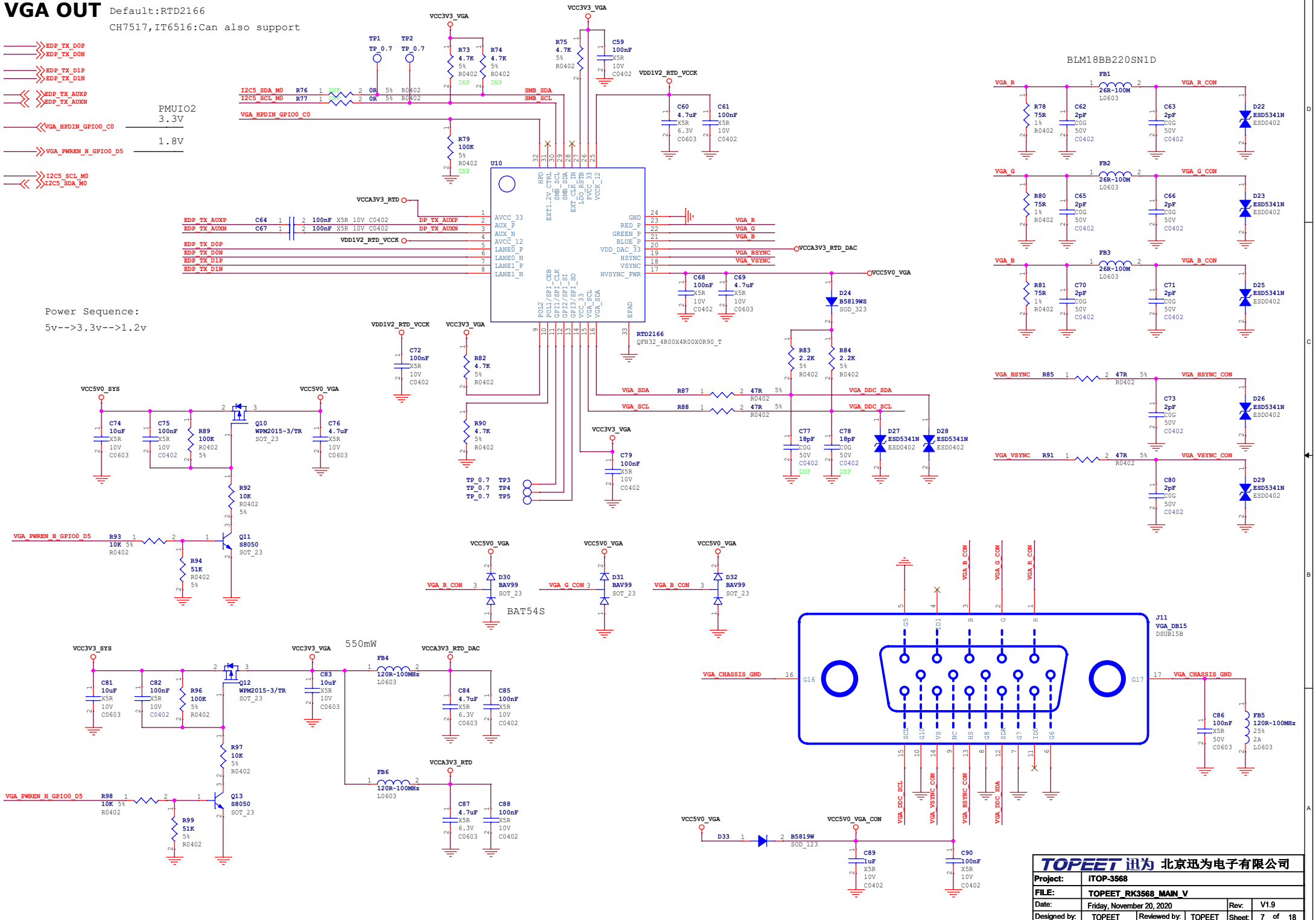

TOPEET 迅为 北京迅为电子有限公司			
Project:	iTOP-3568		
FILE:	TOPEET_RK3568_MAIN_V		
Date:	Friday, November 20, 2020	Rev:	V1.9
Designed by: TOPEET	Reviewed by: TOPEET	Sheet:	7 of 18

Giga PHY0

And WIFI/BT Option

GMAC0_TXD0
GMAC0_TXD1
GMAC0_TXD2
GMAC0_TXD3
GMAC0_TXEN
GMAC0_TXCLK
GMAC0_RXD0
GMAC0_RXD1
GMAC0_RXD2
GMAC0_RXD3
GMAC0_RXDV_CRS
GMAC0_RXCLK
ETH0_REFCLKO_25M
GMAC0_MCLKINOUT
GMAC0_MDC
GMAC0_MDIO
GMAC0_RSTn_GPIO3_B7
GMAC0_INT/PMEB_GPIO3_C0

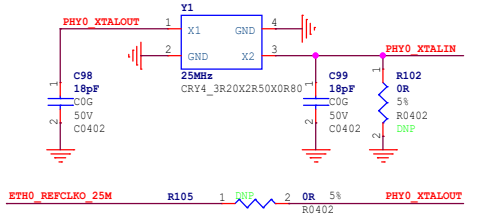

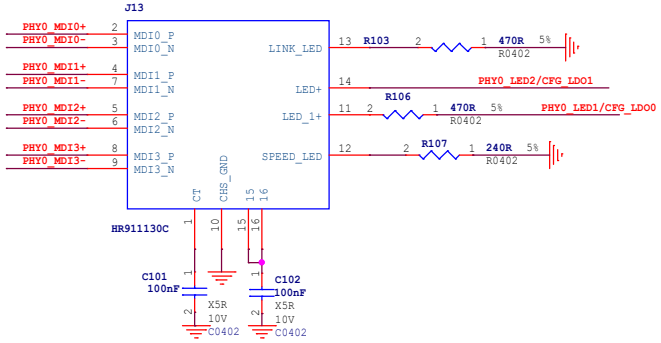

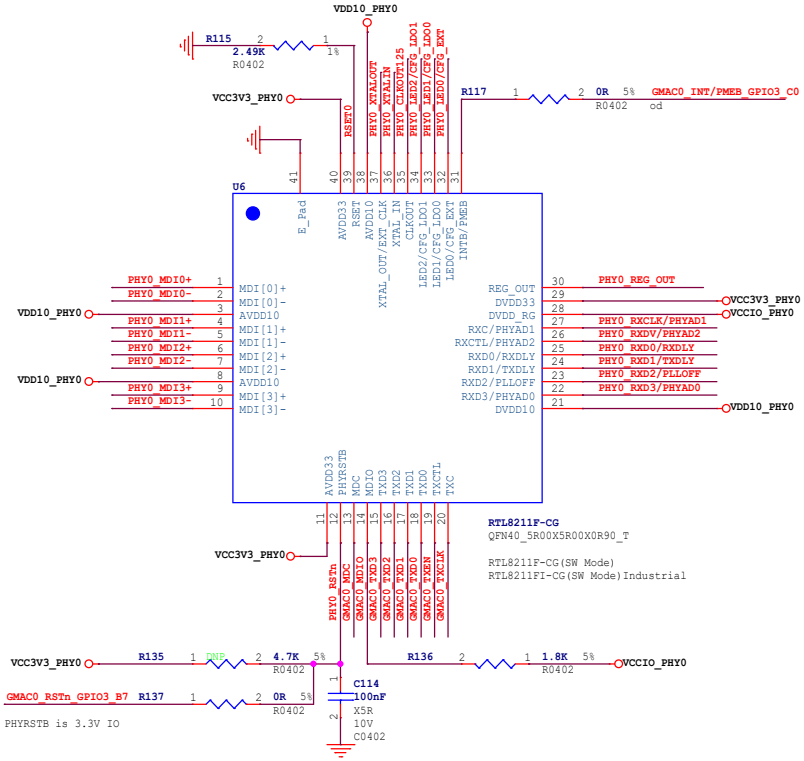

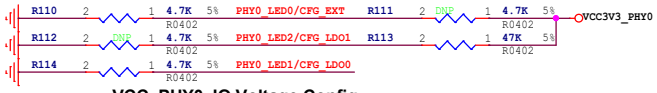

VCC_PHY0_IO Voltage Config

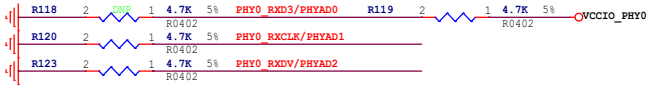

PHY Address Config

PHY Address	PHYAD[2:0]
1 (default)	3'b001

Pull-up for additional 2ns delay to RXC for data latching

Pull-up for additional 2ns delay to TXC for data latching

Pull-up to disable PLL @ ALDPS mode(Low power mode)

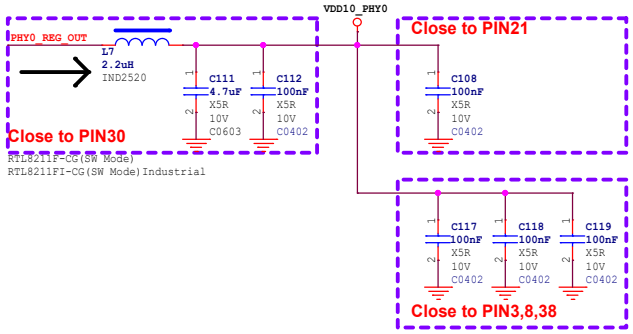

RGMII Power Source	CFG_EXT	CFG_LDO[1:0]	
External 3.3V	1'b1	2'b00	
External 1.8V	1'b1	2'b10	
Internal 1.8V (default)	1'b0	2'b10	

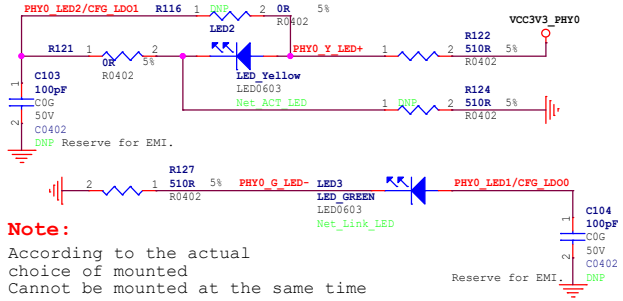

Note:

According to the actual
choice of mounted
Cannot be mounted at the same time

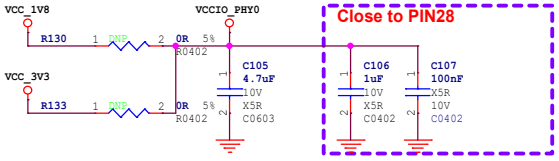

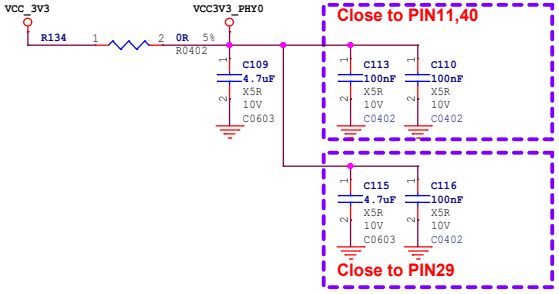

TOPEET 迅为 北京迅为电子有限公司					
Project:	iTOP-3568				
FILE:	TOPEET_RK3568_MAIN_V				
Date:	Friday, November 20, 2020			Rev:	V1.9
Designed by:	TOPEET	Reviewed by:	TOPEET	Sheet:	8 of 18

Giga PHY1

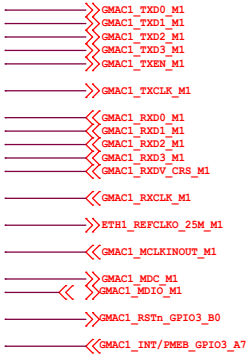

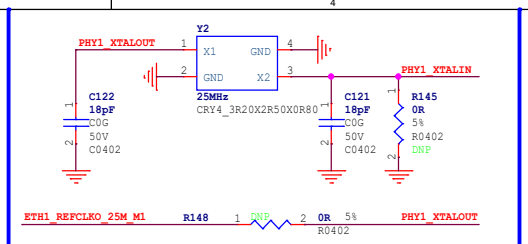

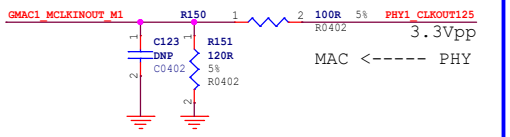

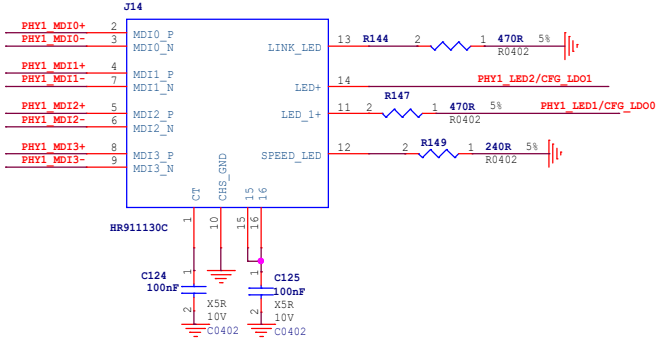

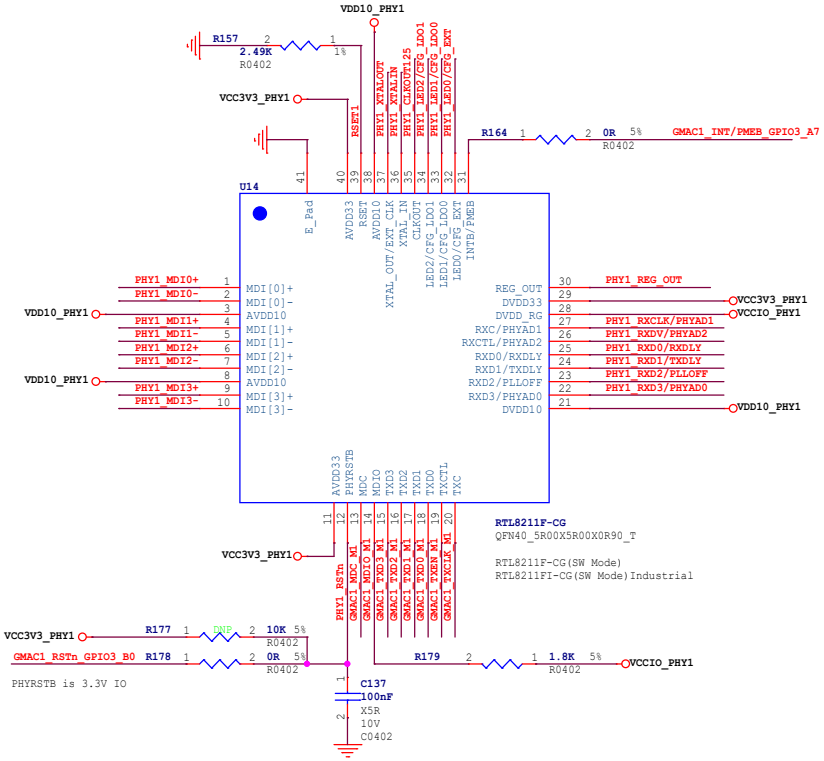

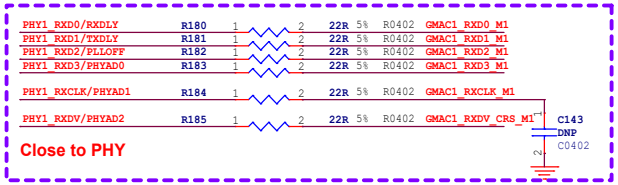

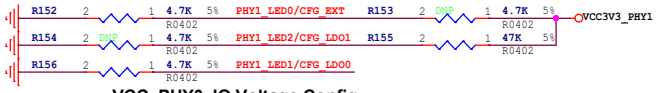

VCC_PHY0_IO Voltage Config

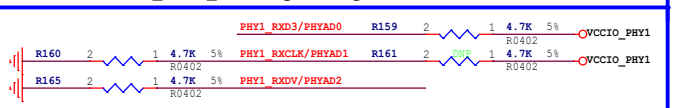

PHY Address Config

PHY Address	PHYAD[2:0]
1 (default)	3'b001

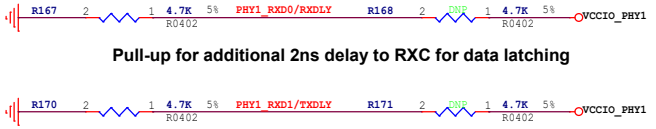

Pull-up for additional 2ns delay to RXC for data latching

Pull-up for additional 2ns delay to TXC for data latching

Pull-up to disable PLL @ ALDPS mode(Low power mode)

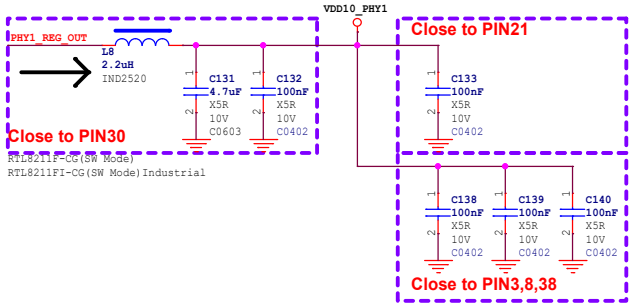

RGMII Power Source	CFG_EXT	CFG_LDO[1:0]	
External 3.3V	1'b1	2'b00	
External 1.8V	1'b1	2'b10	
Internal 1.8V(default)	1'b0	2'b10	

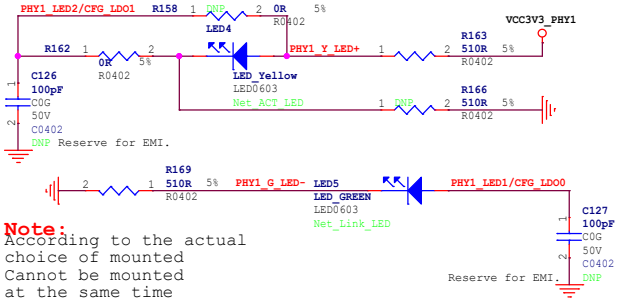

Note:
According to the actual
choice of mounted
Cannot be mounted
at the same time

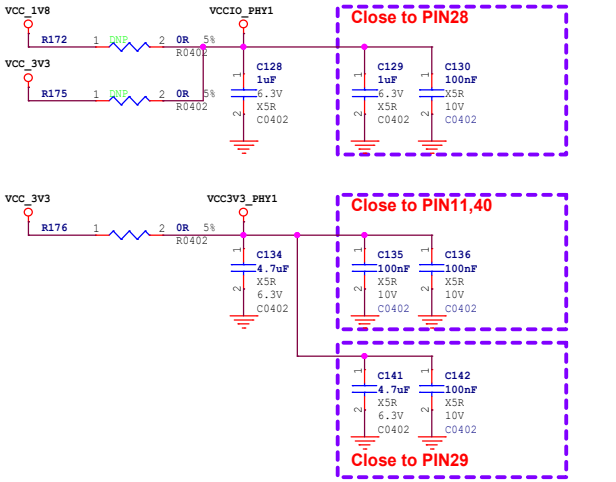

TOPEET 迅为 北京迅为电子有限公司			
Project:	iTOP-3568		
FILE:	TOPEET_RK3568_MAIN_V		
Date:	Tuesday, December 22, 2020	Rev:	V1.9
Designed by: TOPEET	Reviewed by: TOPEET	Sheet:	9 of 18

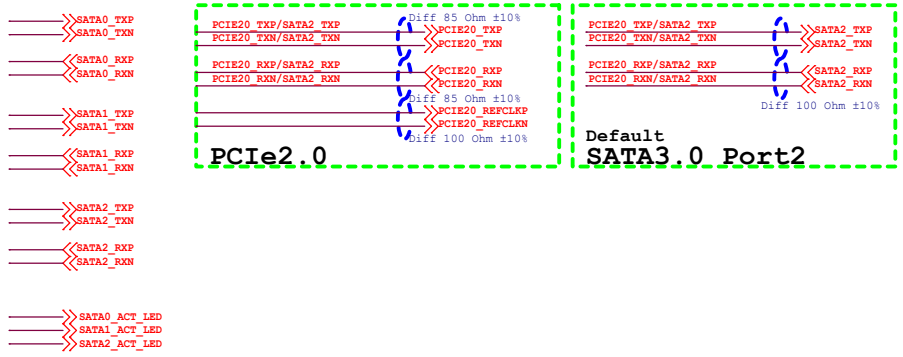

SATA3.0 Port2

And PCIe2.0 option

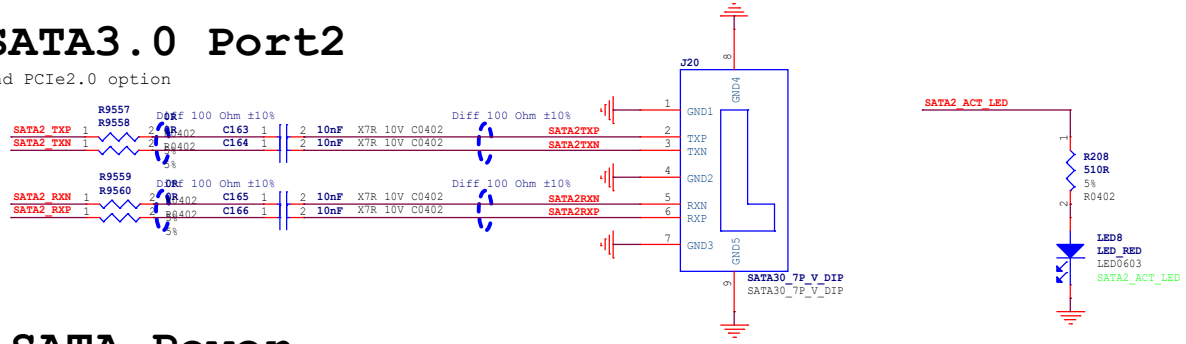

SATA Power

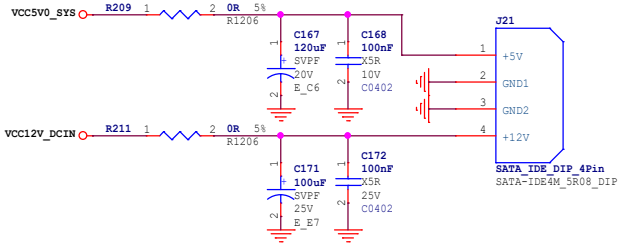

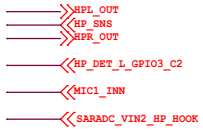

MIC

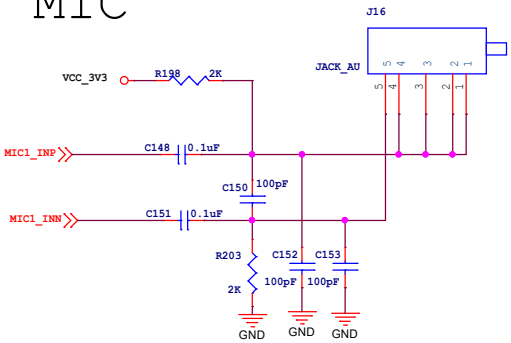

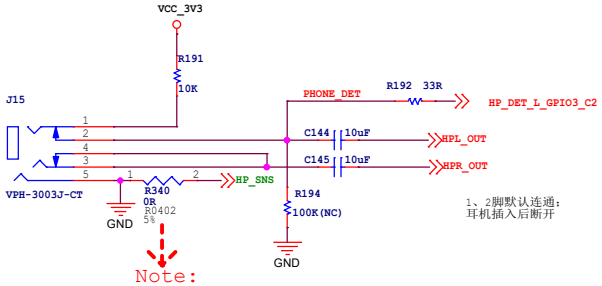

Note:

For Headphone design,
HP_SNS connect to GND near the Jack.
For NO Headphone design,
HP_SNS connect to GND near the PMIC.

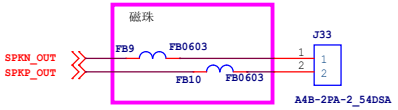

TOPEET 迅为 北京迅为电子有限公司					
Project:	iTOP-3568				
FILE:	TOPEET_RK3568_MAIN_V				
Date:	Friday, November 20, 2020			Rev:	V1.9
Designed by:	TOPEET	Reviewed by:	TOPEET	Sheet:	10 of 18

PCIe2.0 x1 Slot

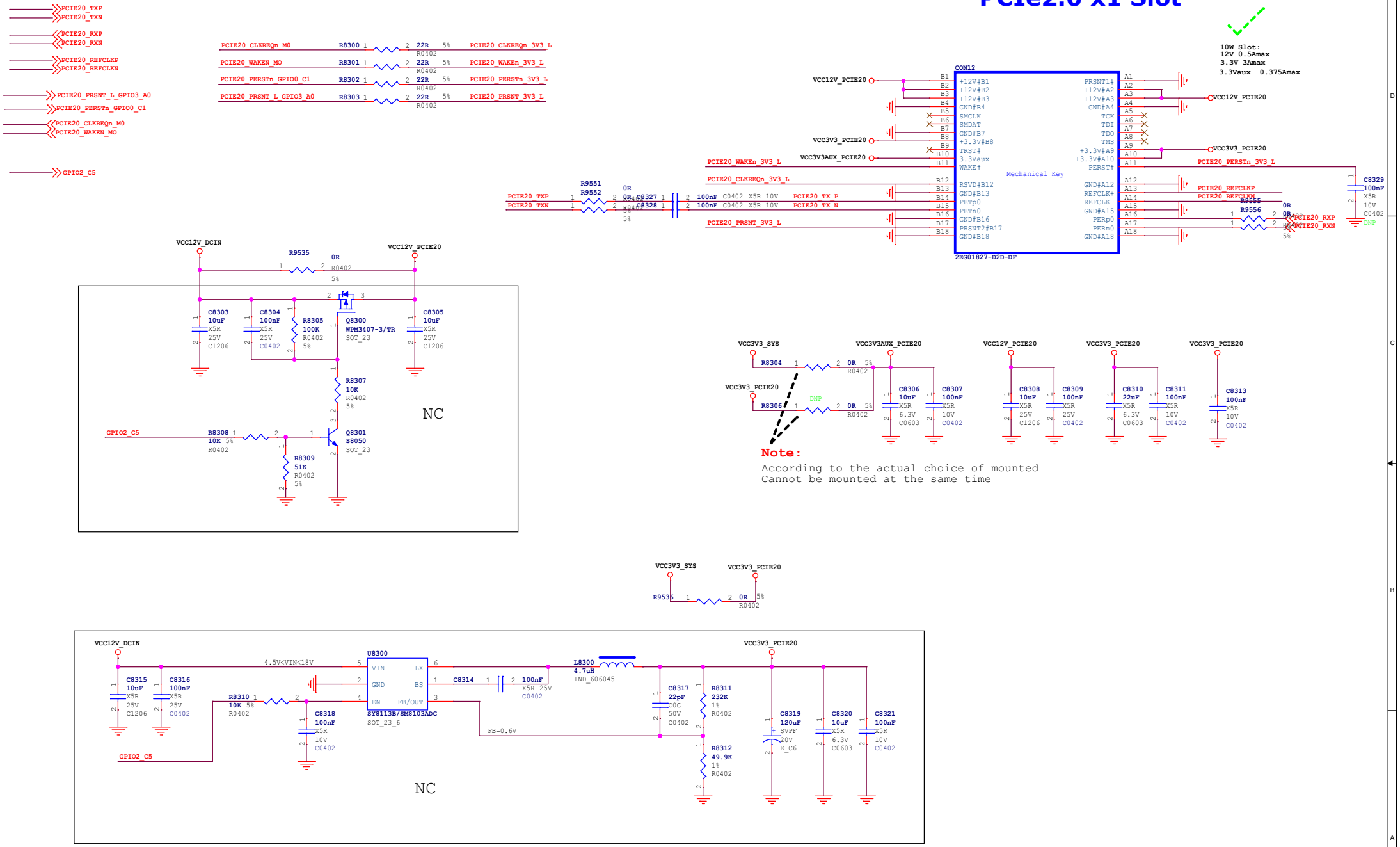

TOPEET 迅为 北京迅为电子有限公司					
Project:	iTOP-3568				
FILE:	TOPEET_RK3568_MAIN_V				
Date:	Tuesday, July 26, 2022			Rev:	V1.9
Designed by:	TOPEET	Reviewed by:	TOPEET	Sheet:	11 of 18

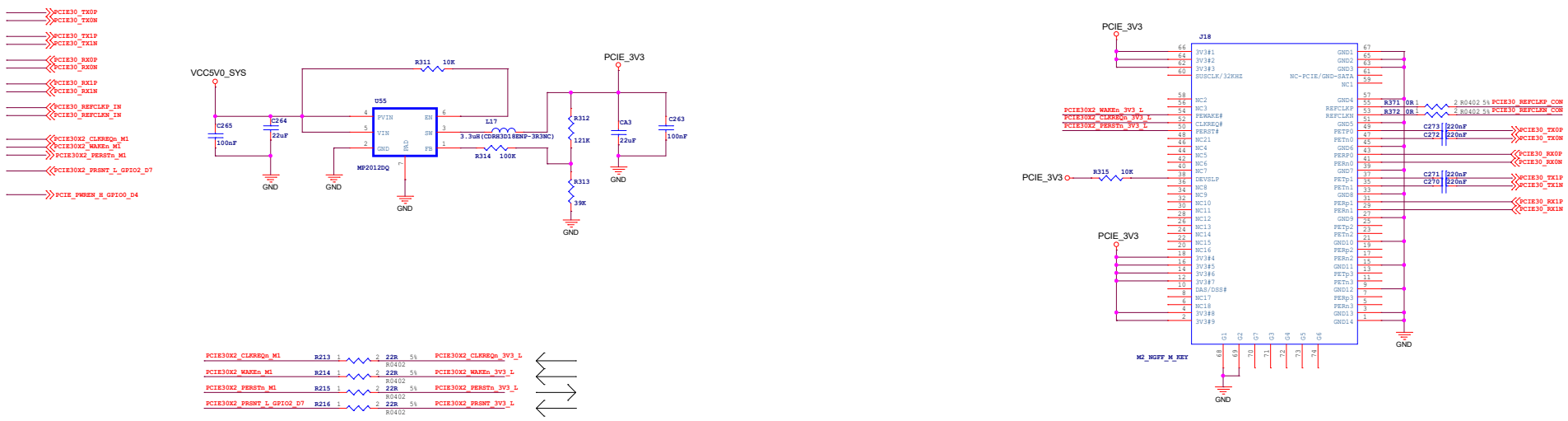

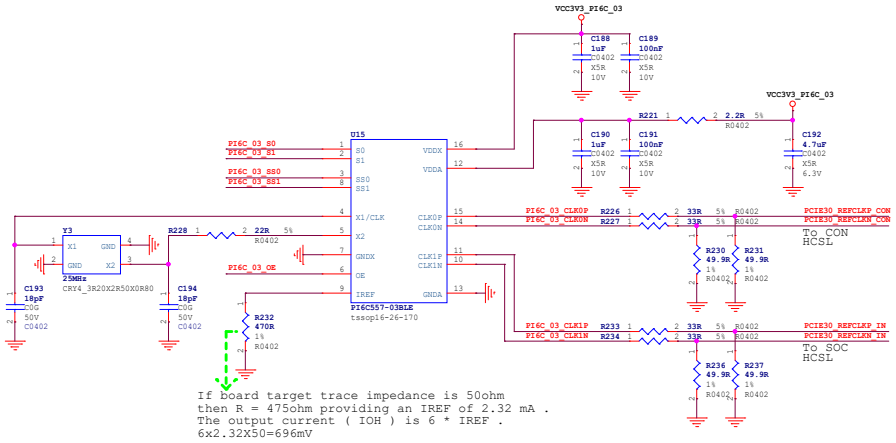

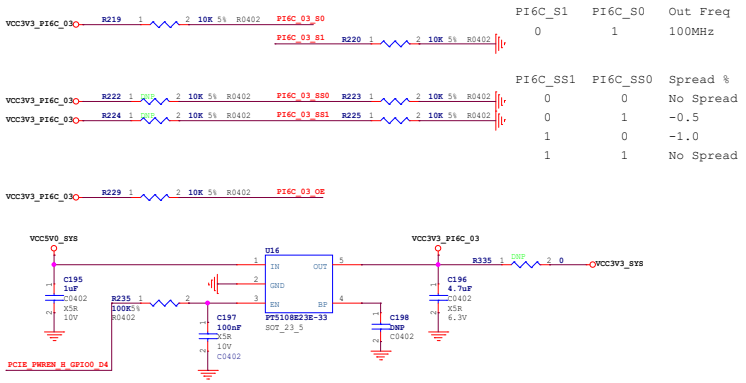

PI6C_S1	PI6C_S0	Out Freq
0	1	100MHz

PI6C_SS1	PI6C_SS0	Spread %
0	0	No Spread
0	1	-0.5
1	0	-1.0
1	1	No Spread

TOPEET 讯为 北京迅为电子有限公司			
Project:	ITOP-3568		
FILE:	TOPEET_RK3568_MAIN_V		
Date:	Friday, November 20, 2020	Rev:	V1.9
Designed by: TOPEET	Reviewed by: TOPEET	Sheet:	12 of 18

MiniPCIe2.0 Slot_Support 4G module

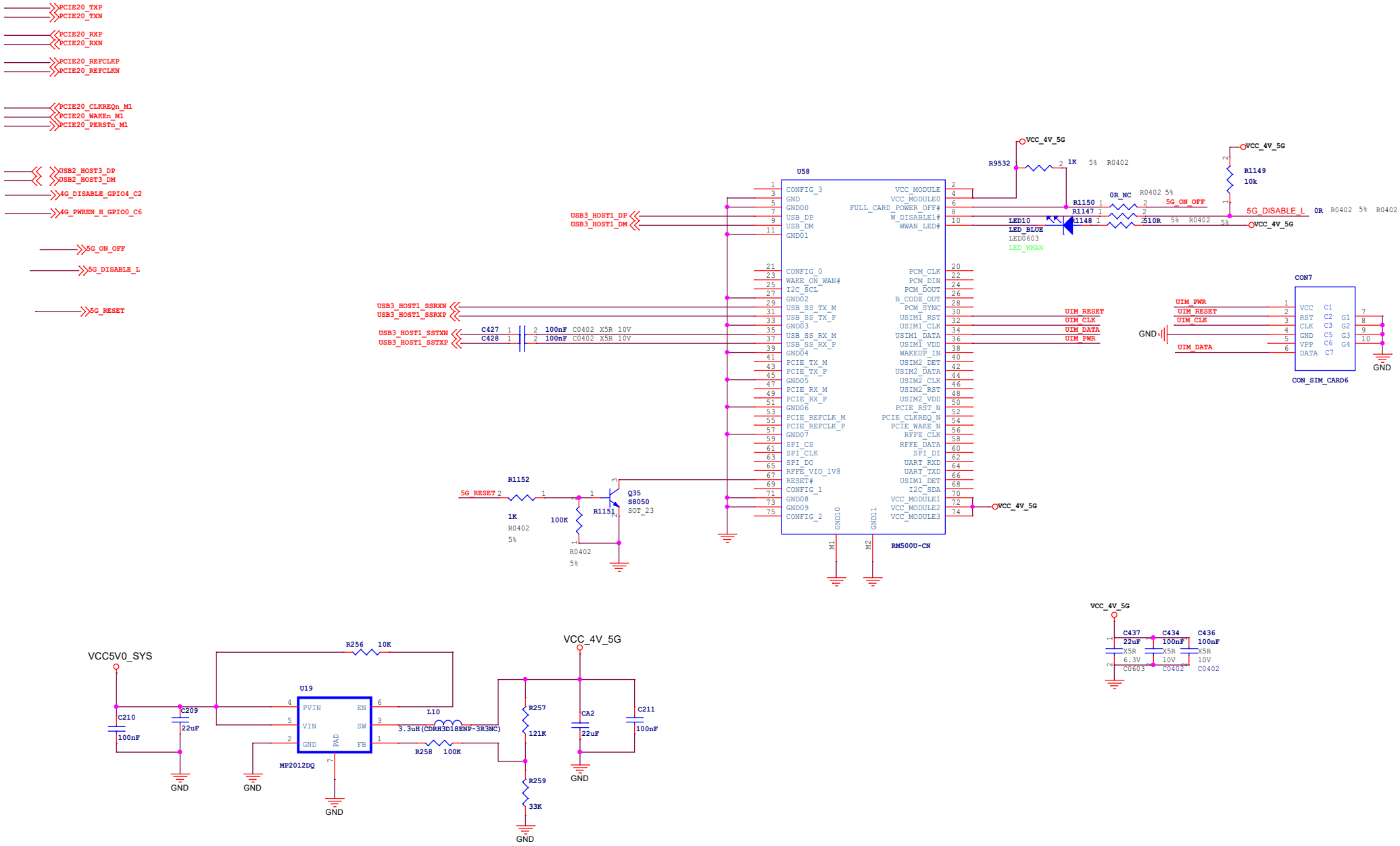

TOPEET 迅为 北京迅为电子有限公司					
Project:	iTOP-3568				
FILE:	TOPEET_RK3568_MAIN_V				
Date:	Sunday, November 22, 2020			Rev:	V1.9
Designed by:	TOPEET	Reviewed by:	TOPEET	Sheet:	13 of 18

UART2_RX_M0_DEBUG
UART2_TX_M0_DEBUG

PWM3_IR

Debug UART2

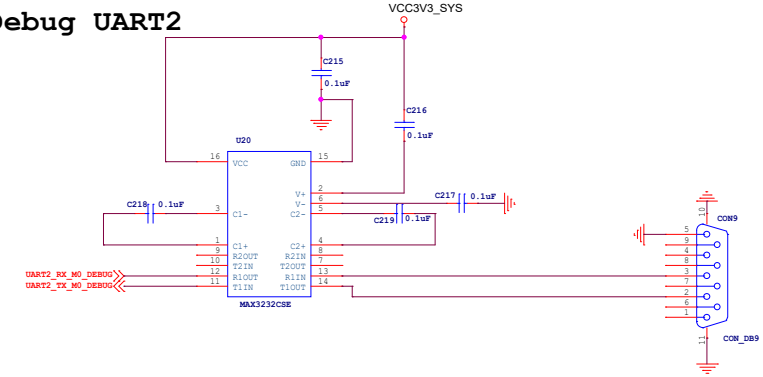

IR Receiver

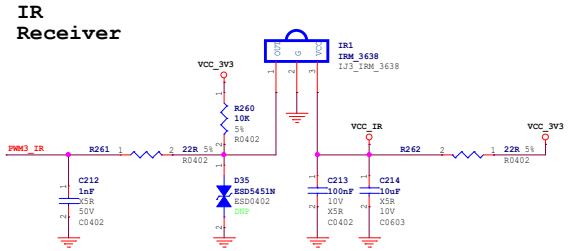

FAN

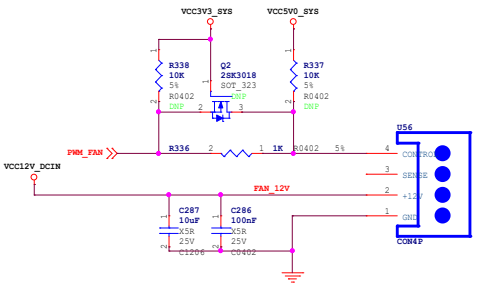

GPIO

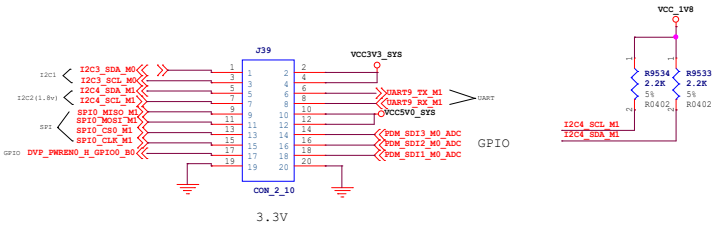

TOPEET 迅为 北京迅为电子有限公司					
Project:	ITOP-3568				
FILE:	TOPEET_RK3568_MAIN_V				
Date:	Friday, November 20, 2020			Rev:	V1.9
Designed by:	TOPEET	Reviewed by:	TOPEET	Sheet:	14 of 18

Key Array

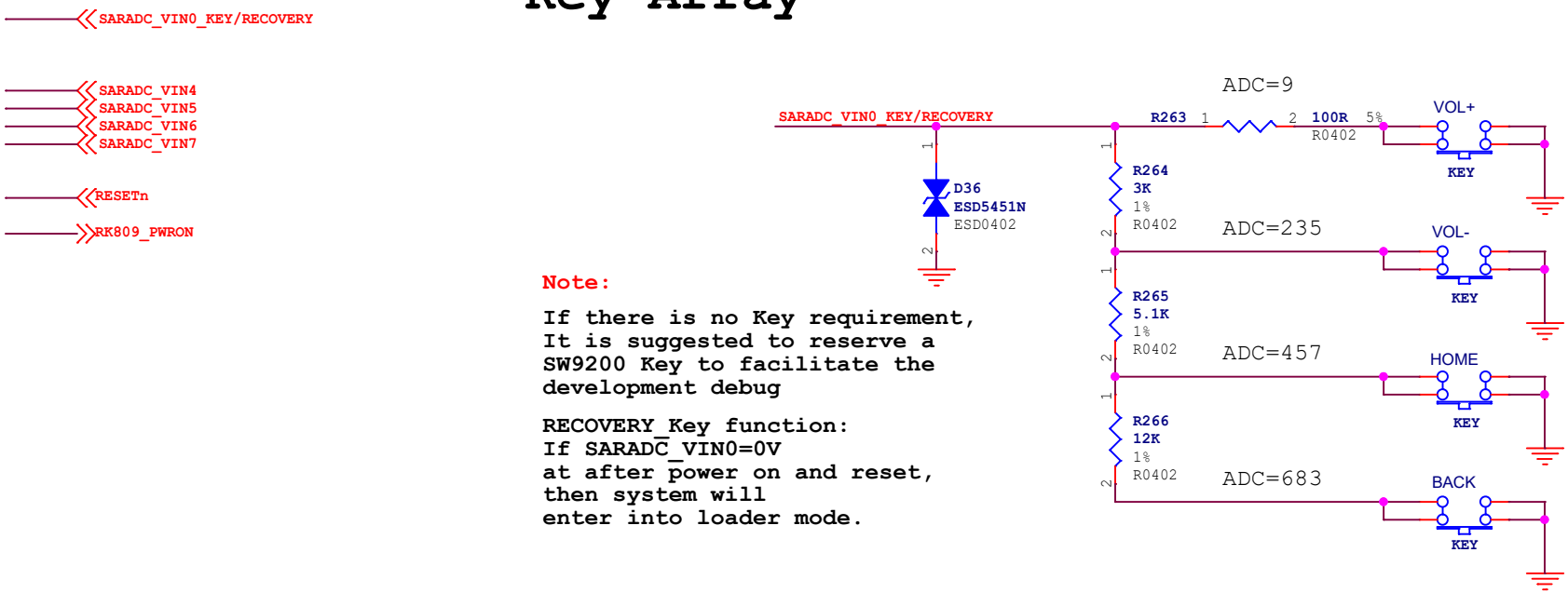

Note:

If there is no Key requirement,
It is suggested to reserve a
SW9200 Key to facilitate the
development debug

RECOVERY_Key function:
If SARADC_VIN0=0V
at after power on and reset,
then system will
enter into loader mode.

PowerOn/OFF_Key

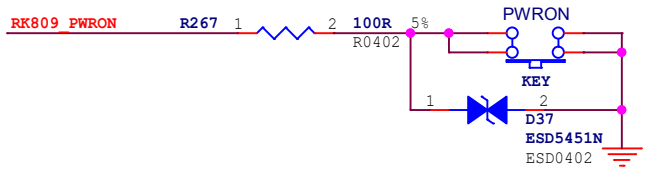

Reset_Key

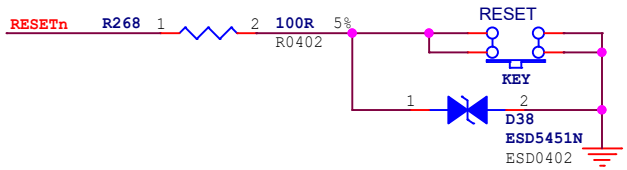

SARADC

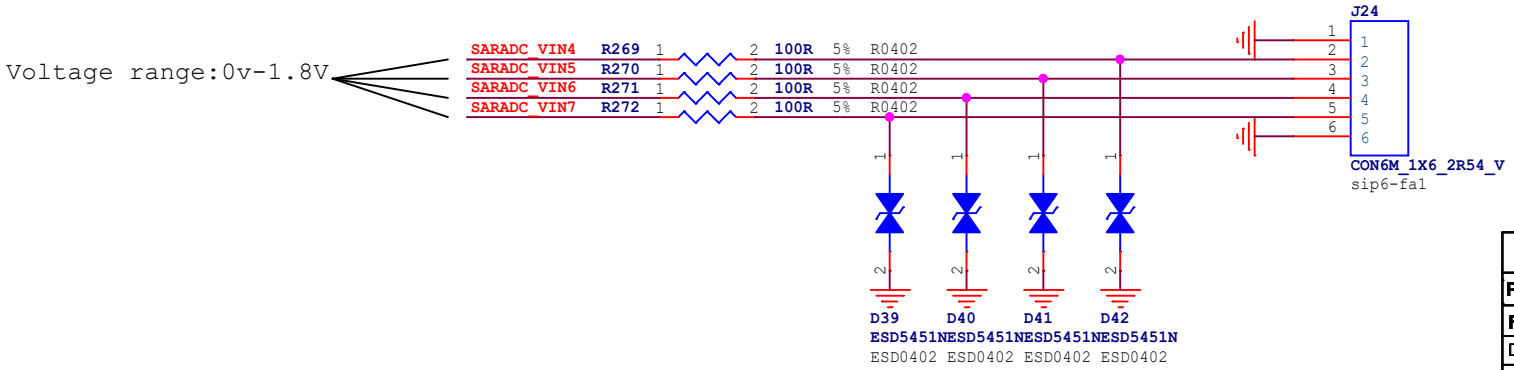

TOPEET 迅为 北京迅为电子有限公司					
Project:	ITOP-3568				
FILE:	TOPEET_RK3568_MAIN_V				
Date:	Friday, November 20, 2020			Rev:	V1.9
Designed by:	TOPEET	Reviewed by:	TOPEET	Sheet:	15 of 18

Working_LEDEN_H_GPIO0_B7

SARADC_VIN1_HW_ID

SARADC_VIN3_BOM_ID

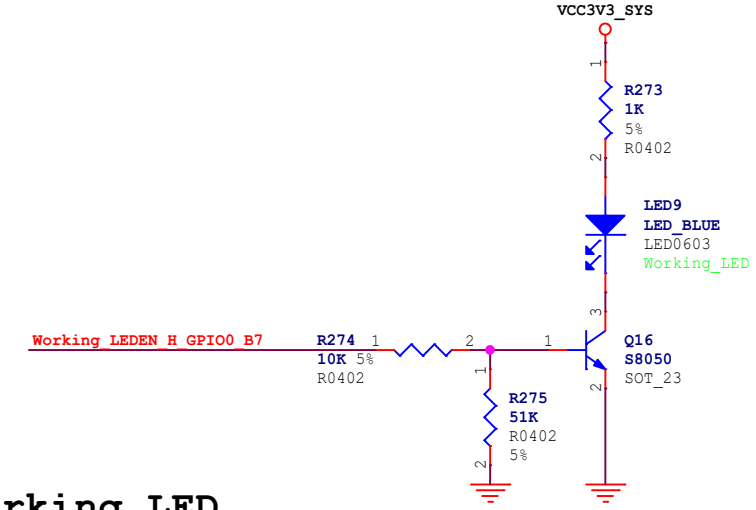

Working LED

HW_ID

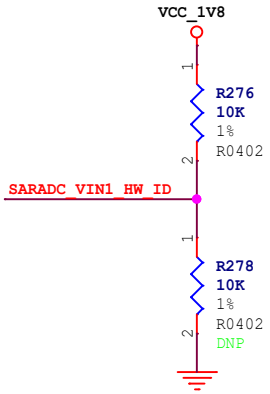

SARADC_VIN1	Up Resistance	Down Resistance
HW_ID0	10K	DNP
HW_ID1	10K	110K
HW_ID2	20K	100K
HW_ID3	33K	100K
HW_ID4	18K	36K
HW_ID5	36K	51K
HW_ID6	51K	51K
HW_ID7	51K	36K
HW_ID8	36K	18K
HW_ID9	100K	33K
HW_ID10	100K	20K
HW_ID11	110K	10K
HW_ID12	DNP	10K

BOM_ID

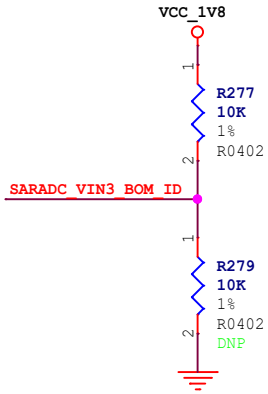

SARADC_VIN3	Up Resistance	Down Resistance
BOM_ID0	10K	DNP
BOM_ID1	10K	110K
BOM_ID2	20K	100K
BOM_ID3	33K	100K
BOM_ID4	18K	36K
BOM_ID5	36K	51K
BOM_ID6	51K	51K
BOM_ID7	51K	36K
BOM_ID8	36K	18K
BOM_ID9	100K	33K
BOM_ID10	100K	20K
BOM_ID11	110K	10K
BOM_ID12	DNP	10K

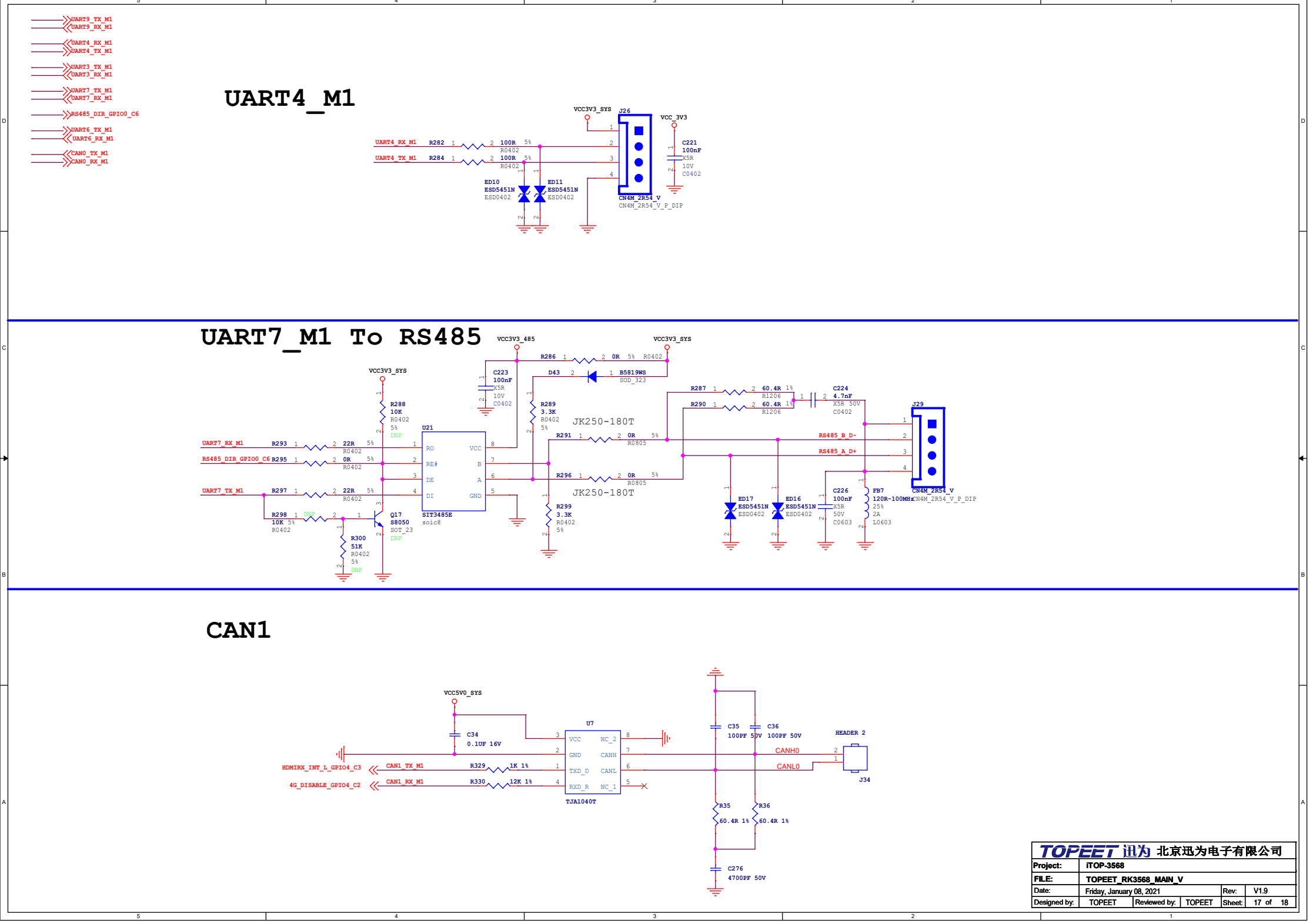
UART9_TX_M1
UART9_RX_M1
UART4_RX_M1
UART4_TX_M1
UART3_TX_M1
UART3_RX_M1
UART7_TX_M1
UART7_RX_M1
RS485_DIR_GPIO0_C6
UART6_TX_M1
UART6_RX_M1
CAN0_TX_M1
CAN0_RX_M1
UART4_M1
VCC3V3_SYS
J26
VCC_3V3
UART4_RX_M1
R282
100R
R0402
UART4_TX_M1
R284
100R
R0402
C221
100nF
X5R
10V
C0402
ED10
ESD5451N
ESD0402
ED11
ESD5451N
ESD0402
CN4M_2R54_V
CN4M_2R54_V_P_DIP
UART7_M1 To RS485
VCC3V3_485
VCC3V3_SYS
R286
0R
R0402
D43
B5819WS
SOD_323
C223
100nF
X5R
10V
C0402
R288
10K
R0402
DNP
U21
R289
3.3K
R0402
JK250-180T
R287
60.4R
R1206
R290
60.4R
R1206
C224
4.7nF
X5R 50V
C0402
J29
UART7_RX_M1
R293
22R
R0402
RS485_DIR_GPIO0_C6
R295
0R
R0402
RO
RE#
DE
DI
VCC
B
A
GND
SIT3485E
soic8
R291
0R
R0805
RS485_B_D-
RS485_A_D+
R296
0R
R0805
JK250-180T
UART7_TX_M1
R297
22R
R0402
R298
10K
R0402
DNP
Q17
S8050
SOT_23
DNP
R300
51K
R0402
DNP
R299
3.3K
R0402
ED17
ESD5451N
ESD0402
ED16
ESD5451N
ESD0402
C226
100nF
X5R
50V
C0603
FB7
120R-100MHz
L0603
CN4M_2R54_V
CN4M_2R54_V_P_DIP
CAN1
VCC5V0_SYS
C34
0.1UF 16V
U7
VCC
GND
TXD_D
RXD_R
NC_2
CANH
CANL
NC_1
TJA1040T
HDMIRX_INT_L_GPIO4_C3
4G_DISABLE_GPIO4_C2
CAN1_TX_M1
CAN1_RX_M1
R329
1K 1%
R330
12K 1%
C35
100PF 50V
C36
100PF 50V
CANH0
CANL0
HEADER 2
J34
R35
60.4R 1%
R36
60.4R 1%
C276
4700PF 50V
TOPEET 迅为 北京迅为电子有限公司
Project: iTOP-3568
FILE: TOPEET_RK3568_MAIN_V
Date: Friday, January 08, 2021
Rev: V1.9
Designed by: TOPEET
Reviewed by: TOPEET
Sheet: 17 of 18

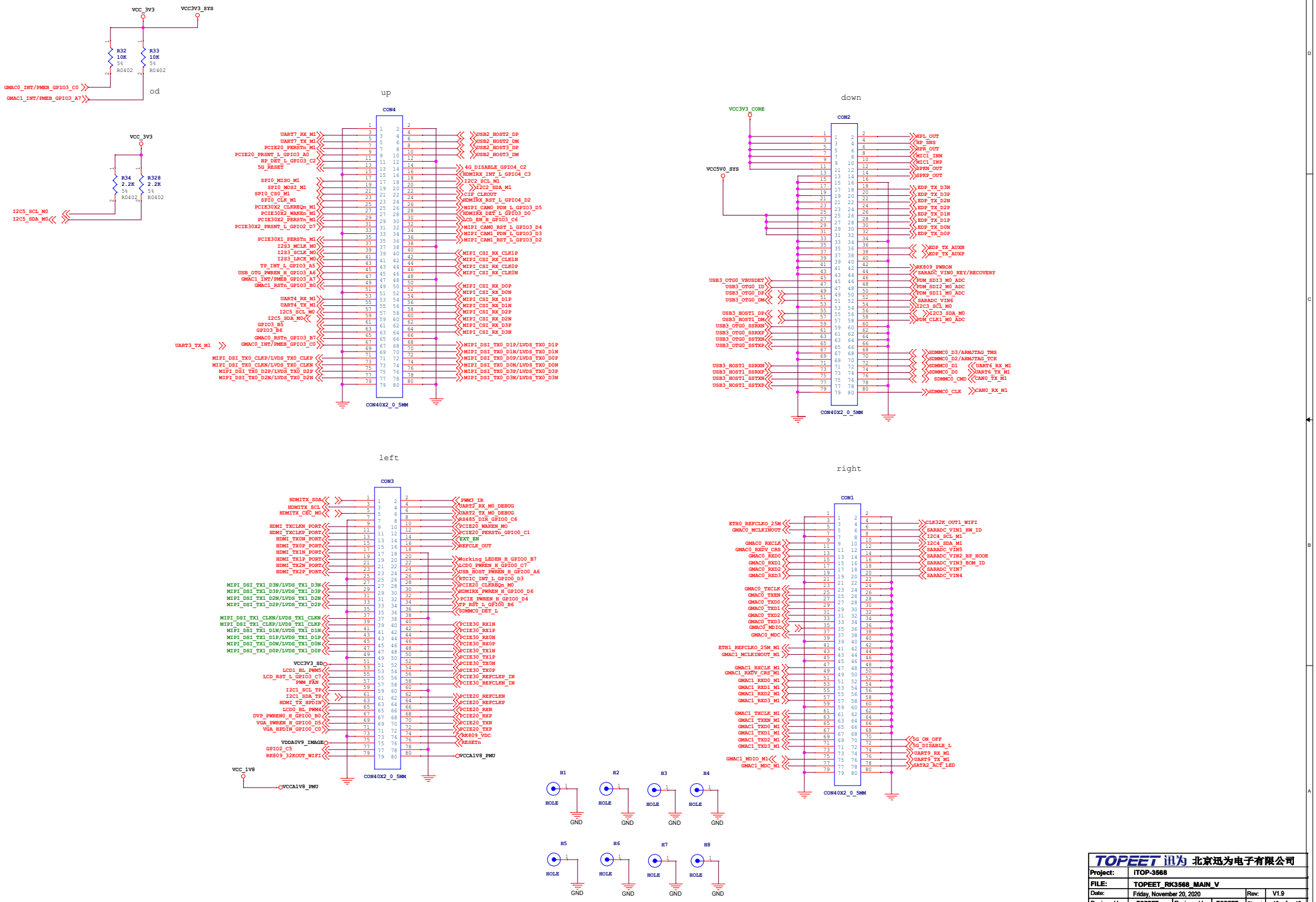

TOPEET 迅为 北京迅为电子有限公司			
Project:	ITOP-3568		
FILE:	TOPEET_RK3568_MAIN_V		
Date:	Friday, November 20, 2020	Rev:	V1.9
Designed by: TOPEET	Reviewed by: TOPEET	Sheet:	18 of 18