Revision History

Version	Date	By	Change Dsecription	Approved
V1.0	2020-11-04	TOPEET	1:Revision preliminary version	
V1.1	2021-02-04	TOPEET	优化电源设计，引出所有GPIO	

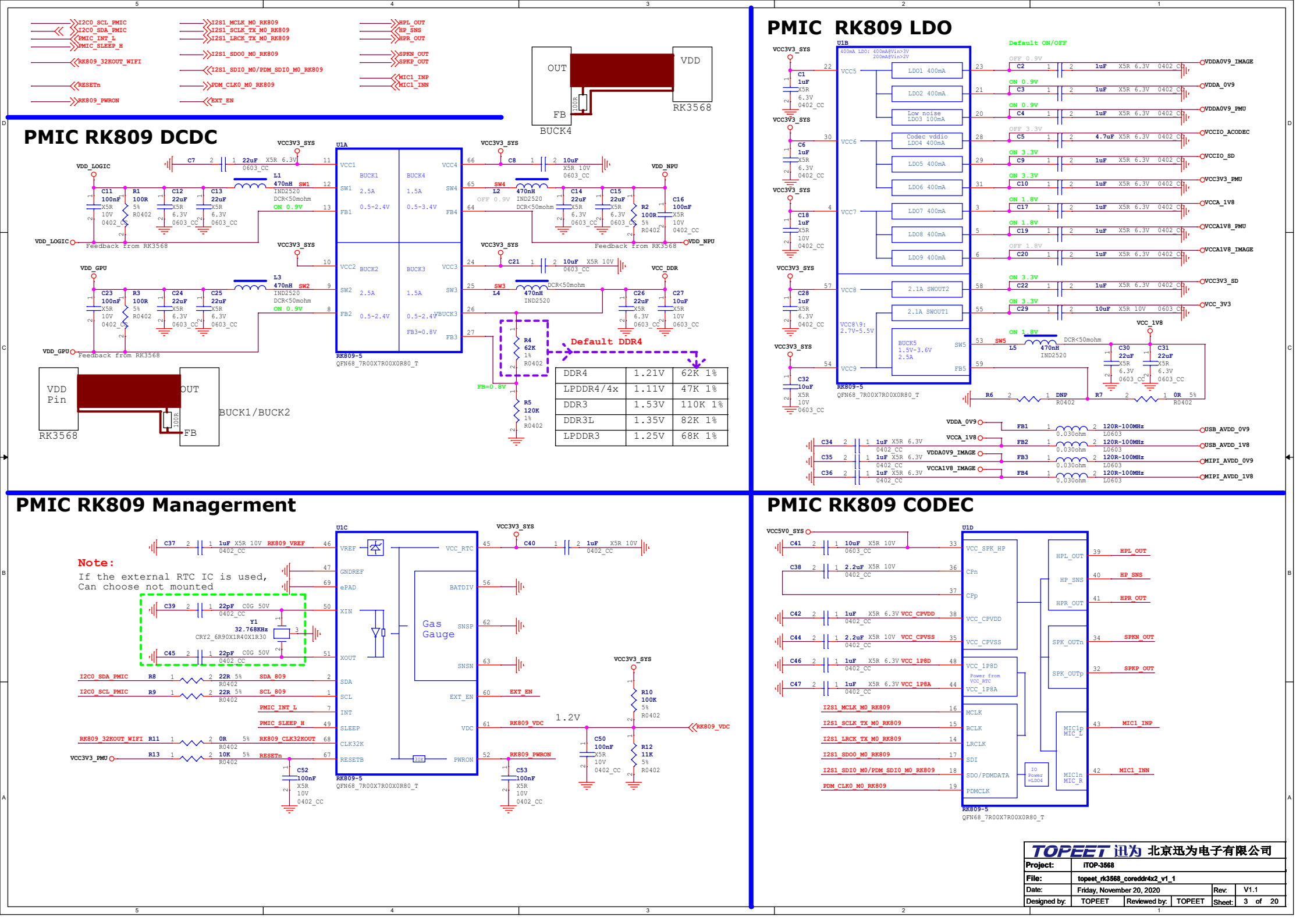
PMIC RK809 DCDC
PMIC RK809 LDO
PMIC RK809 Managerment
PMIC RK809 CODEC
Default DDR4
Note:
If the external RTC IC is used,
Can choose not mounted
Gas Gauge
BUCK4
BUCK1/BUCK2
RK3568
RK809-5
QFN68_7R00X7R00X0R80_T
TOPEET 迅为 北京迅为电子有限公司
Project: iTOP-3568
File: topeet_rk3568_coreddr4x2_v1_1
Date: Friday, November 20, 2020
Rev: V1.1
Designed by: TOPEET
Reviewed by: TOPEET
Sheet: 3 of 20

RK3568_ABCDE (Power&Gnd)

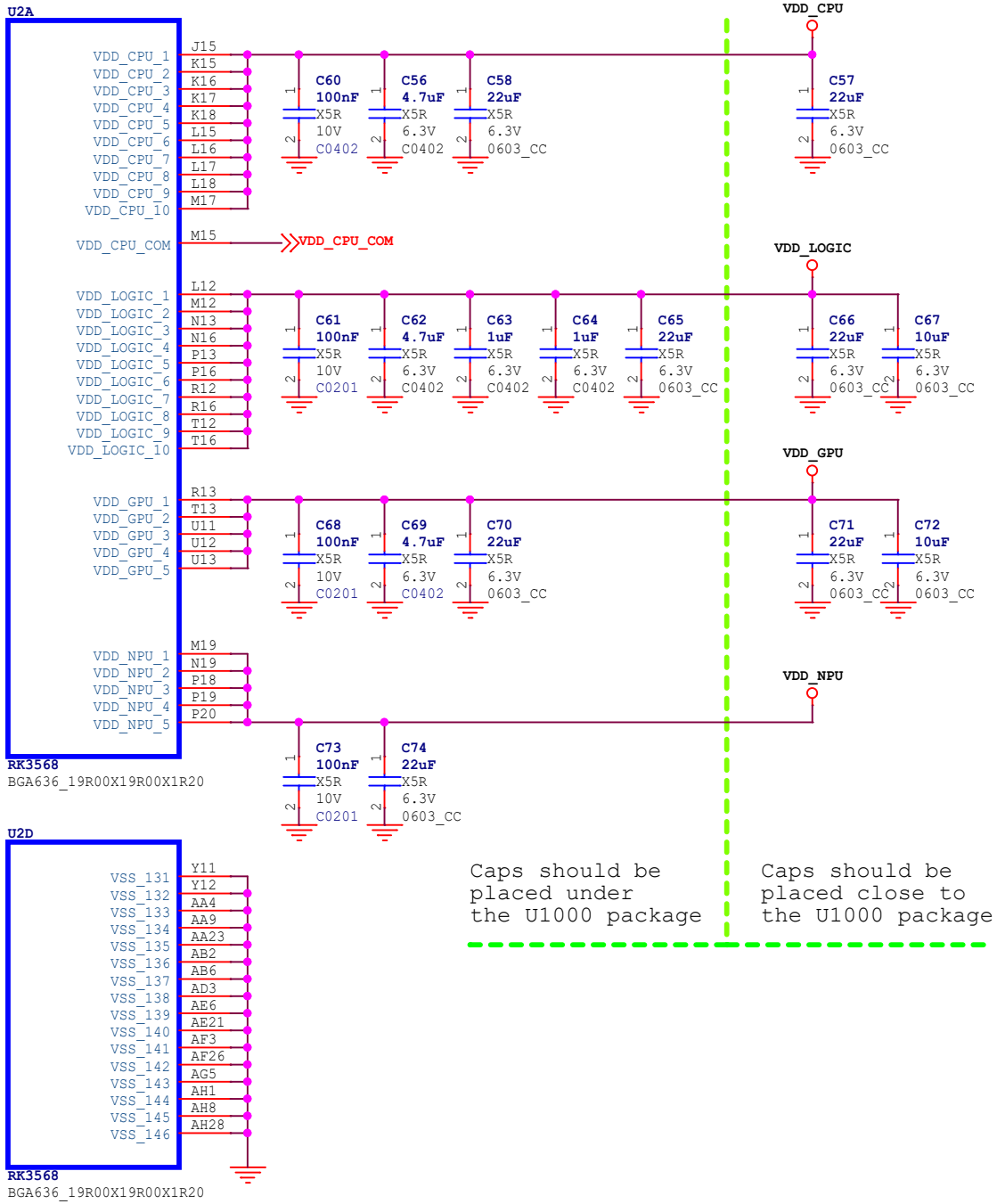

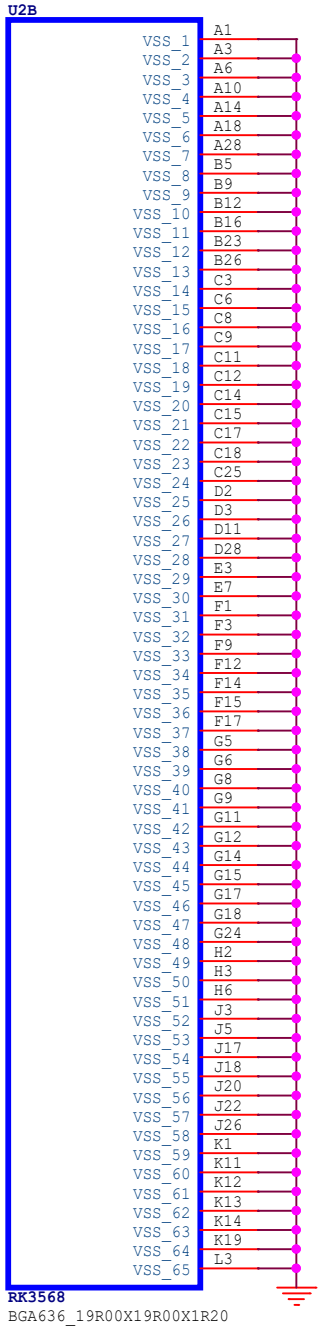

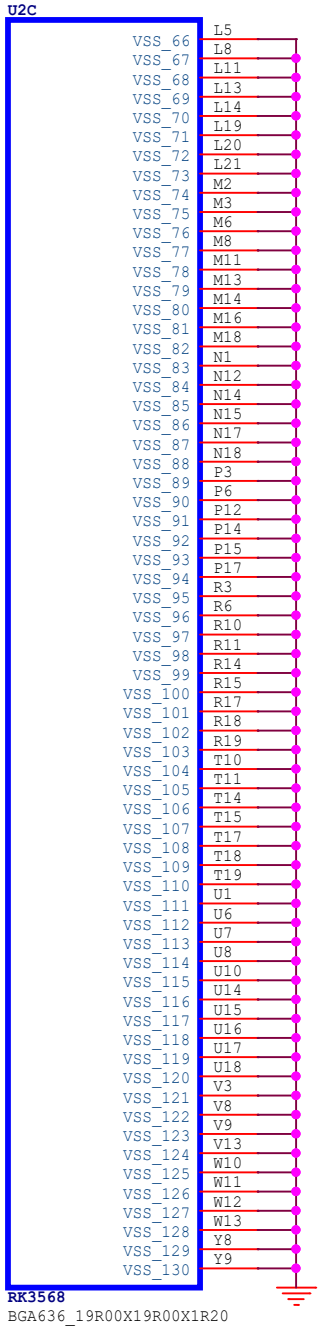

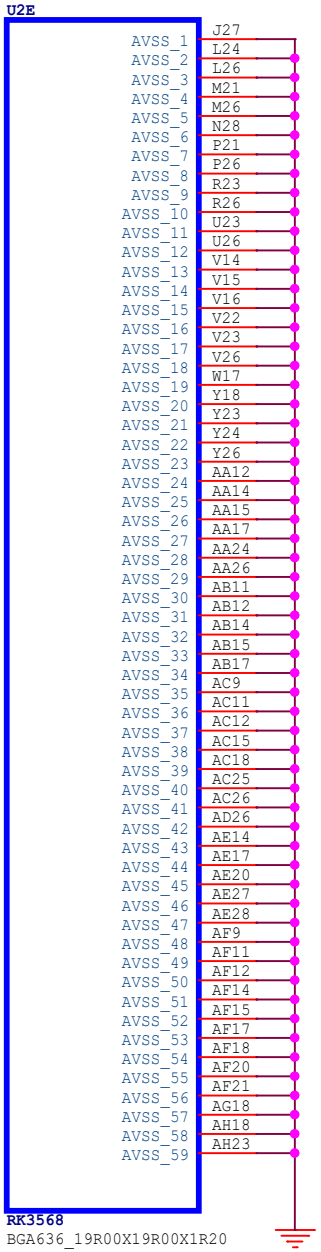

TOPEET 迅为 北京迅为电子有限公司					
Project:	iTOP-3568				
File:	topeet_rk3568_coreddr4x2_v1_1				
Date:	Friday, November 20, 2020			Rev:	V1.1
Designed by:	TOPEET	Reviewed by:	TOPEET	Sheet:	4 of 20

RK3568_F (DDR PHY)

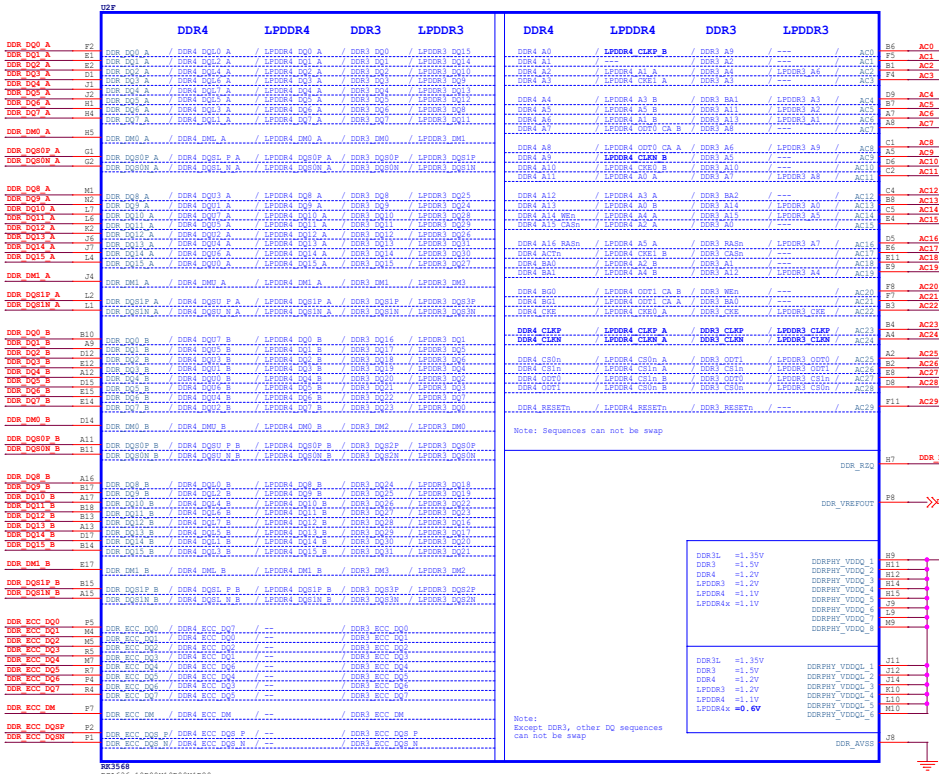

Default DDR4 AC

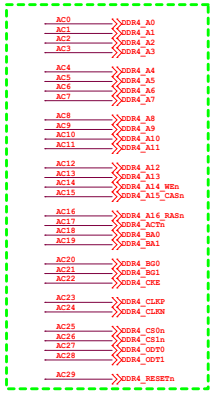

LPDDR4/4x AC

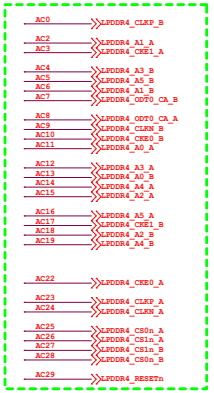

DDR3 AC

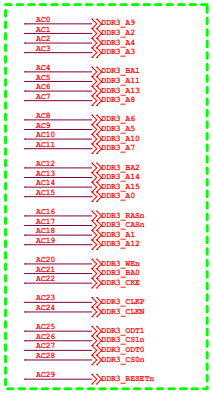

LPDDR3 AC

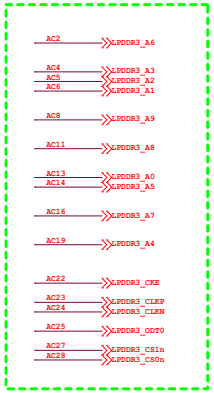

Default DDR4

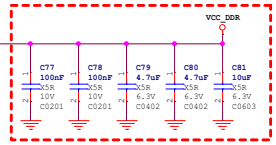

Note:
Caps should be placed under the U1000 package

Note:

LPDDR4x mode:
Pin J11,J12,J14,K10,L10,M10 connected to VCC0V6_DDR power supply
For example

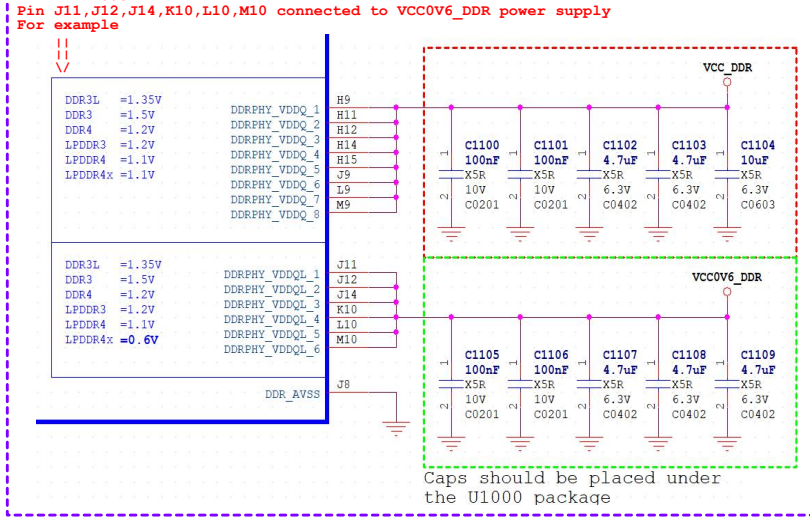

Caps should be placed under the U1000 package

Default DDR4 DQ

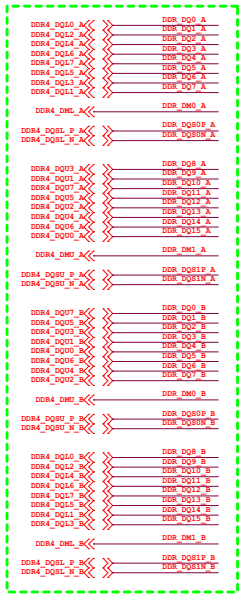

LPDDR4/4x DQ

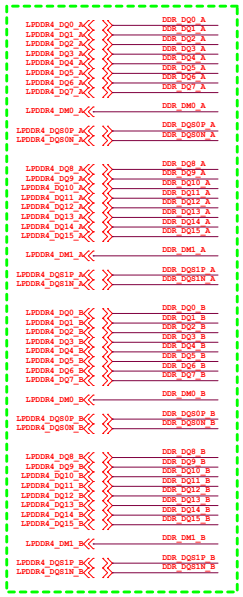

DDR3 DQ

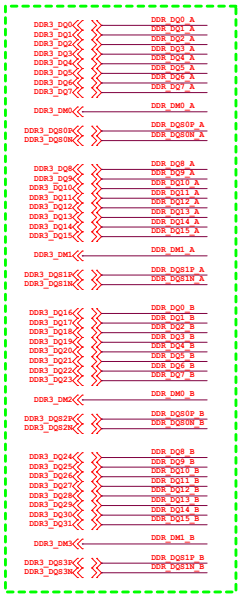

LPDDR3 DQ

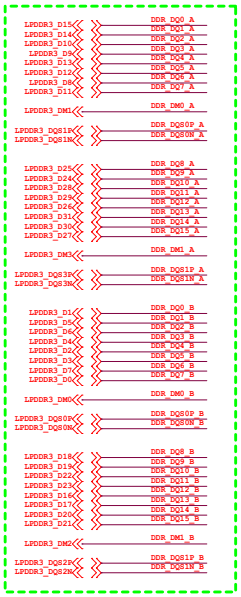

DDR4 ECC DQ

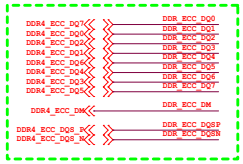

DDR3 ECC DQ

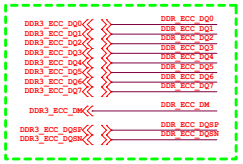

TOPEET 迅为 北京迅为电子有限公司			
Project:	ITOP-3568		
File:	topeet_rk3568_coreddr4x2_v1_1		
Date:	Friday, November 20, 2020	Rev:	V1.1
Designed by: TOPEET	Reviewed by: TOPEET	Sheet:	5 of 20

RK3568_G(OSC/PLL/PMUIO1/2)

Note:
Adjusted the load capacitance according to the crystal specification.

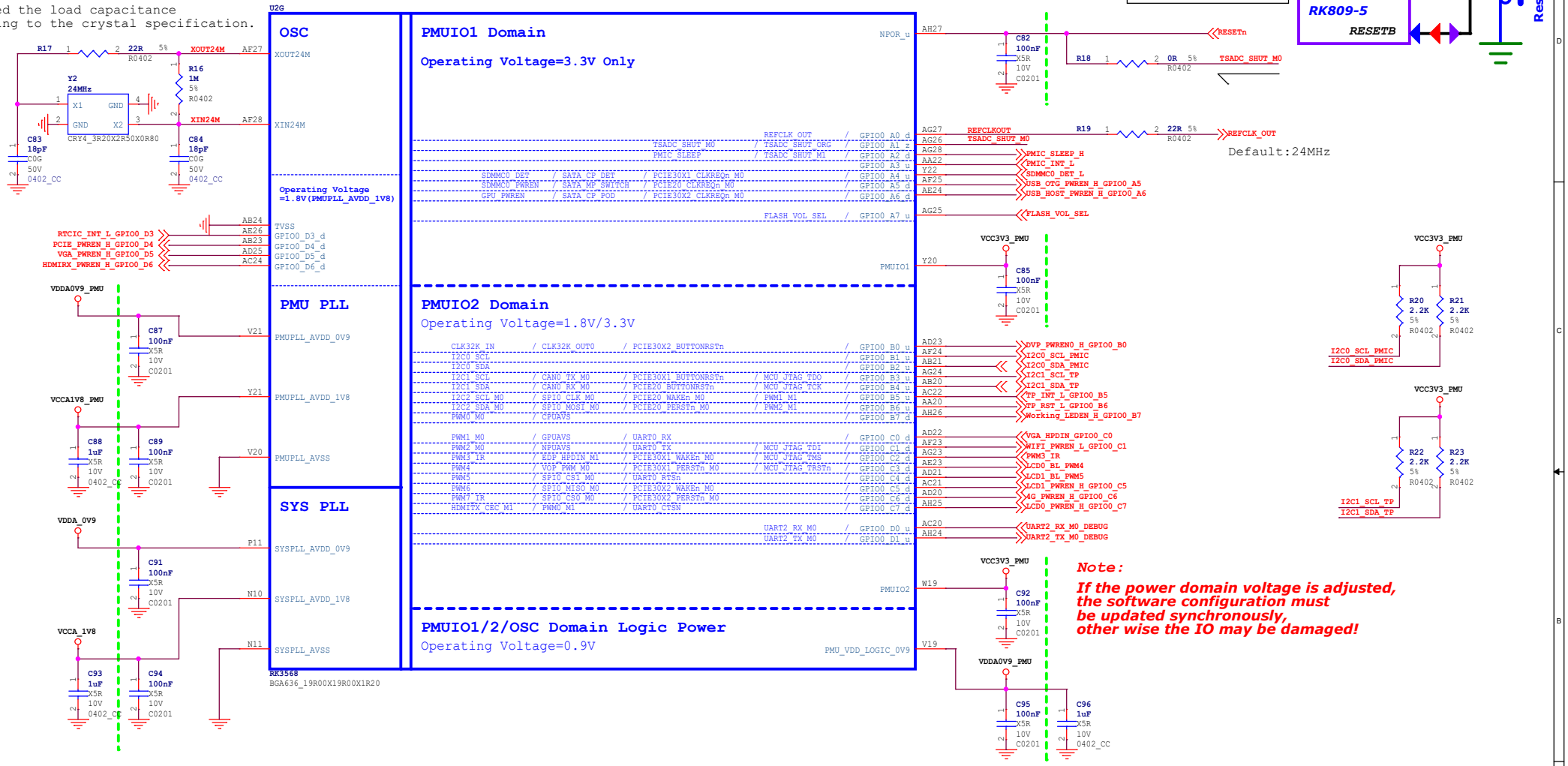

Note:
If the power domain voltage is adjusted, the software configuration must be updated synchronously, other wise the IO may be damaged!

Note:
Caps of between dashed green lines and U1000 should be placed under the U1000 package.
Other caps should be placed close to the U1000 package

TOPEET 迅为 北京迅为电子有限公司			
Project:	iTOP-3568		
File:	topeet_rk3568_coreddr4x2_v1_1		
Date:	Friday, November 20, 2020	Rev:	V1.1
Designed by: TOPEET	Reviewed by: TOPEET	Sheet:	6 of 20

RK3568_I(VCCIO2 Domain)

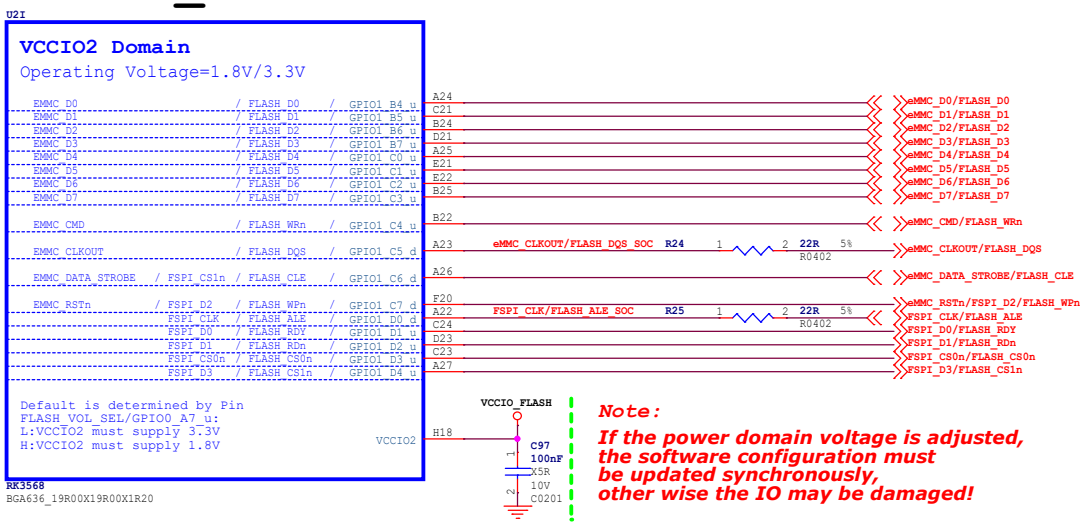

Note:

If the power domain voltage is adjusted, the software configuration must be updated synchronously, other wise the IO may be damaged!

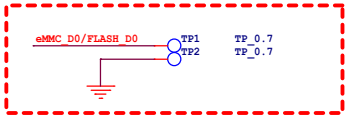

Note:

For eMMC or Nand Flash:
If eMMC_D0/FLASH_D0=0V at after power on and reset, then system will enter into Maskrom mode.

Layout note:

Test point must be placed on the line, and no branch can be added

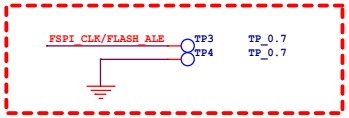

Note:

For SPI Flash:
If FSPI_CLK=0V at after power on and reset, then system will enter into Maskrom mode.

Note:

Reserve TestPoint for put the system into Maskrom mode to update the firmware
When writing mismatched firmware or other conditions result in boot failure, use this test point

Except in this case, please use Recovery Key
Put the system into loader mode to update the firmware

RK3568_J(VCCIO3 Domain)

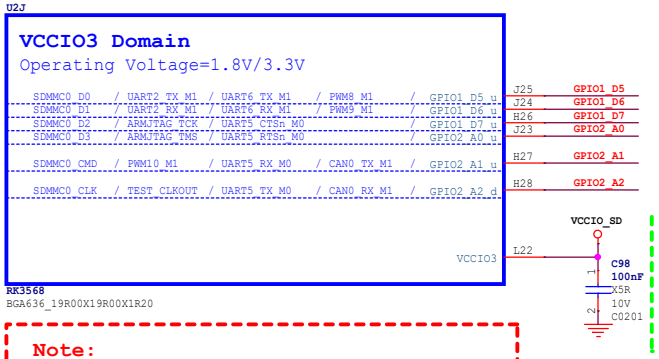

Note:

Caps of between dashed green lines and U1000 should be placed under the U1000 package

Default

SDMMC0&JTAG

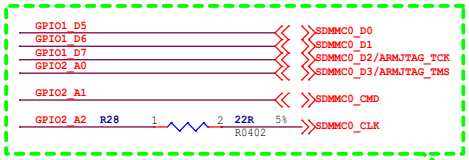

If no MicroSD Card function:

UART&CAN&JTAG

Option

Note:

If the power domain voltage is adjusted, the software configuration must be updated synchronously, other wise the IO may be damaged!

TOPEET 迅为 北京迅为电子有限公司					
Project:	iTOP-3568				
File:	topeet_rk3568_coreddr4x2_v1_1				
Date:	Friday, November 20, 2020		Rev:	V1.1	
Designed by:	TOPEET	Reviewed by:	TOPEET	Sheet:	7 of 20

RK3568_U(USB3.0/SATA/QSGMII/PCIe2.0 x1)

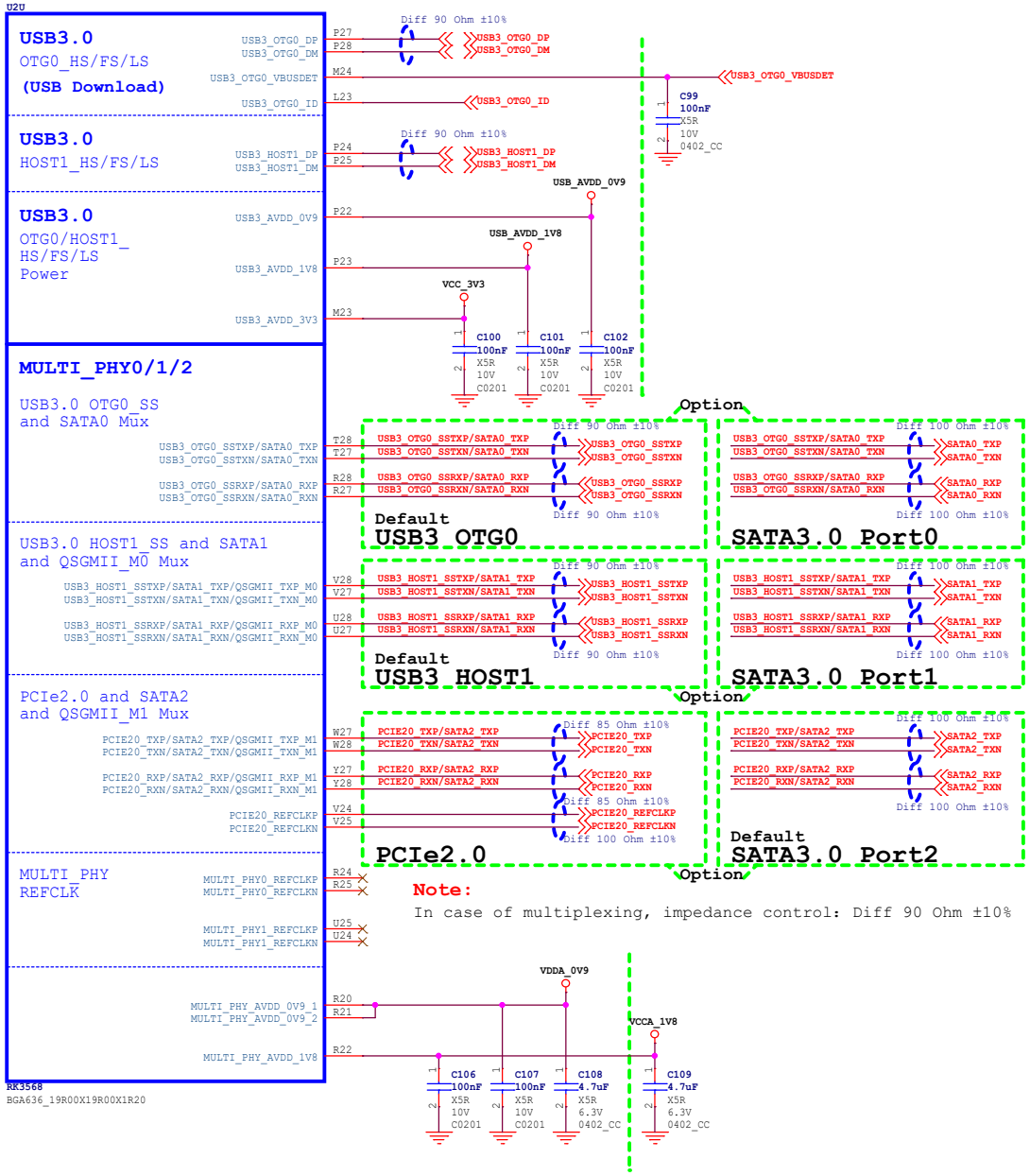

Note:
In case of multiplexing, impedance control: Diff 90 Ohm ±10%

Note:
Caps of between dashed green lines and U1000
should be placed under the U1000 package.
Other caps should be placed close to the U1000 package

RK3568_V(USB2.0 HOST)

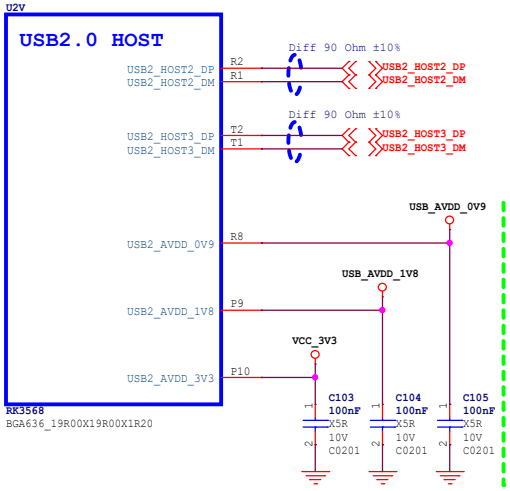

RK3568_W(PCIe3.0 x2)

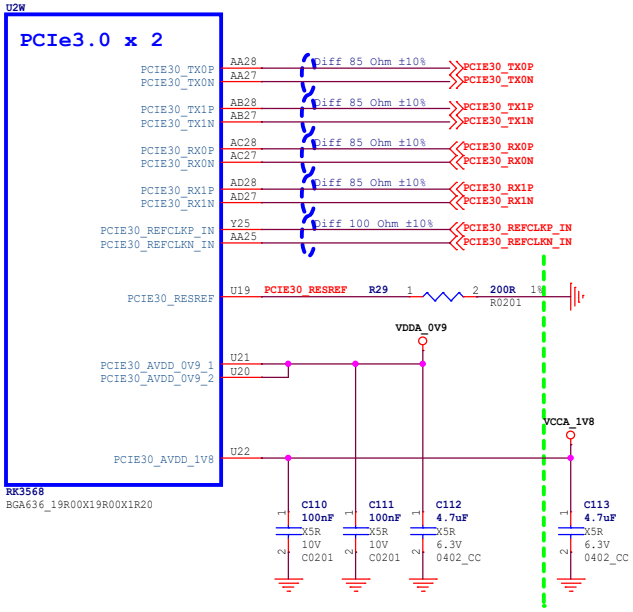

TOPEET 迅为 北京迅为电子有限公司					
Project:	iTOP-3568				
File:	topeet_rk3568_coreddr4x2_v1_1				
Date:	Friday, November 20, 2020			Rev:	V1.1
Designed by:	TOPEET	Reviewed by:	TOPEET	Sheet:	8 of 20

RK3568_K(VCCIO4 Domain)

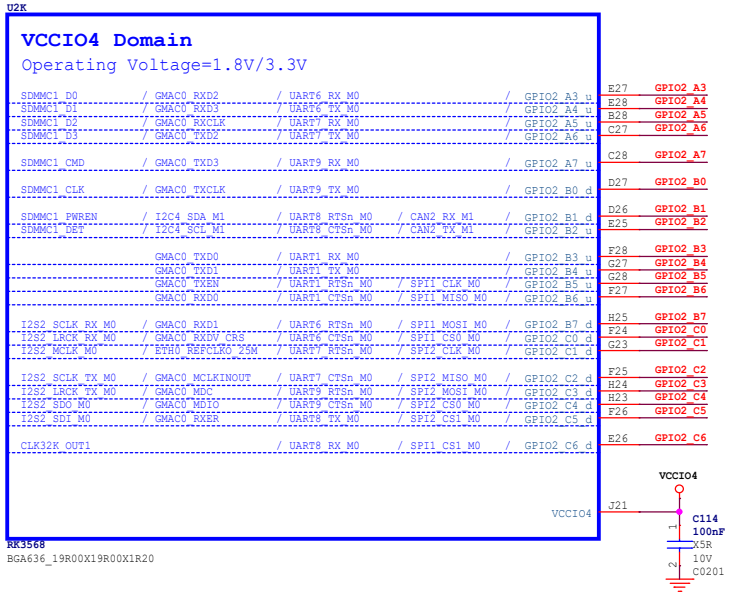

Default

WIFI+BT+PCM

RGMII0

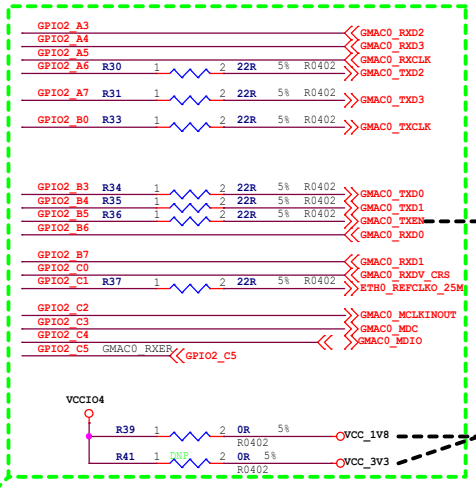

Option

Note:

If Ethernet PHY uses other models, please note whether the default pull-up and pull-down of GPIO affect Ethernet PHY function

At present, TXEN will be affected if it defaults to high level need to add a 4.7K resistance to ground

Note:

According to the actual choice of mounted Cannot be mounted at the same time

Default:1.8V

Select the voltage according to the application

Note:

If the power domain voltage is adjusted, the software configuration must be updated synchronously, other wise the IO may be damaged!

RK3568_N(VCCIO7 Domain)

Note:

When use HDMI, HDMITX_SCL/SDA cannot be shared with other devices

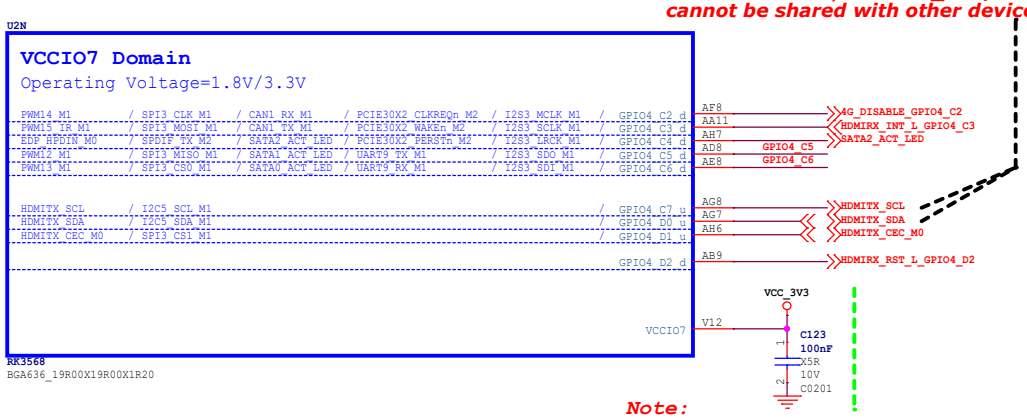

Note:

If the power domain voltage is adjusted, the software configuration must be updated synchronously, other wise the IO may be damaged!

Default

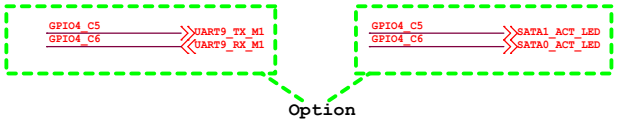

Option

RK3568_O(SARADC/OTP)

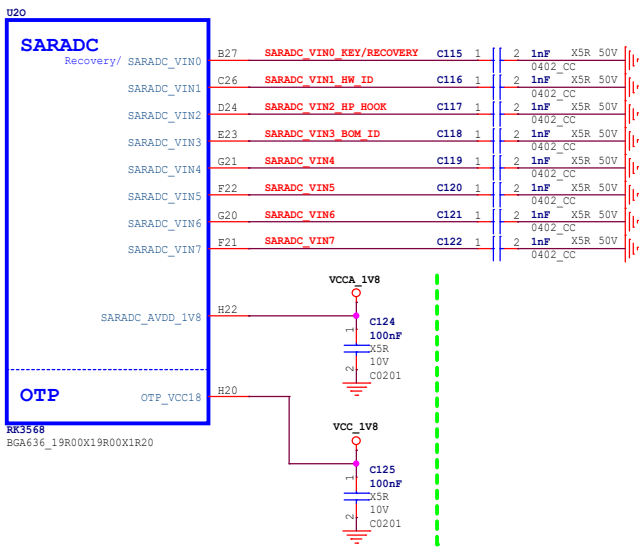

Note:

Must be mounted

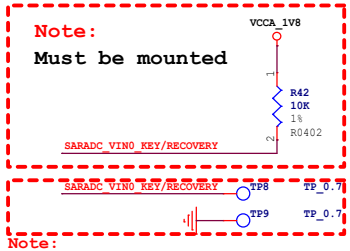

Note:

If there is no Key requirement, two test points must be reserved to facilitate firmware update

It is suggested to reserve a Key to facilitate the development debug

If SARADC_VIN0=0V at after power on and reset, then system will enter into loader mode.

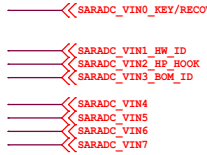

Note:

Caps of between dashed green lines and U1000 should be placed under the U1000 package

TOPEET 迅为 北京迅为电子有限公司					
Project:	iTOP-3568				
File:	topeet_rk3568_coreddr4x2_v1_1				
Date:	Friday, November 20, 2020			Rev:	V1.1
Designed by:	TOPEET	Reviewed by:	TOPEET	Sheet:	9 of 20

RK3568_P(MIPI_CSI_RX)

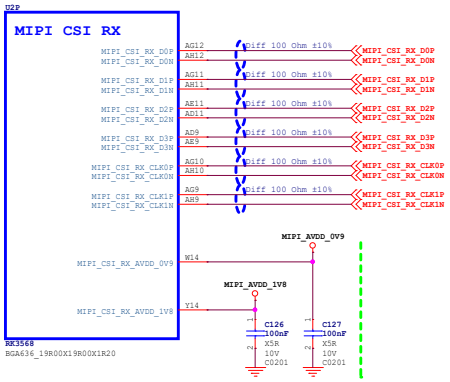

Option1	Sensor1 x4Lane	MIPI_CSI_RX_D0-3 MIPI_CSI_RX_CLK0
Option2	Sensor1 x2Lane + Sensor2 x2Lane	MIPI_CSI_RX_D0-1 MIPI_CSI_RX_CLK0
		MIPI_CSI_RX_D2-3 MIPI_CSI_RX_CLK1

RK3568_M(VCCIO6 Domain)

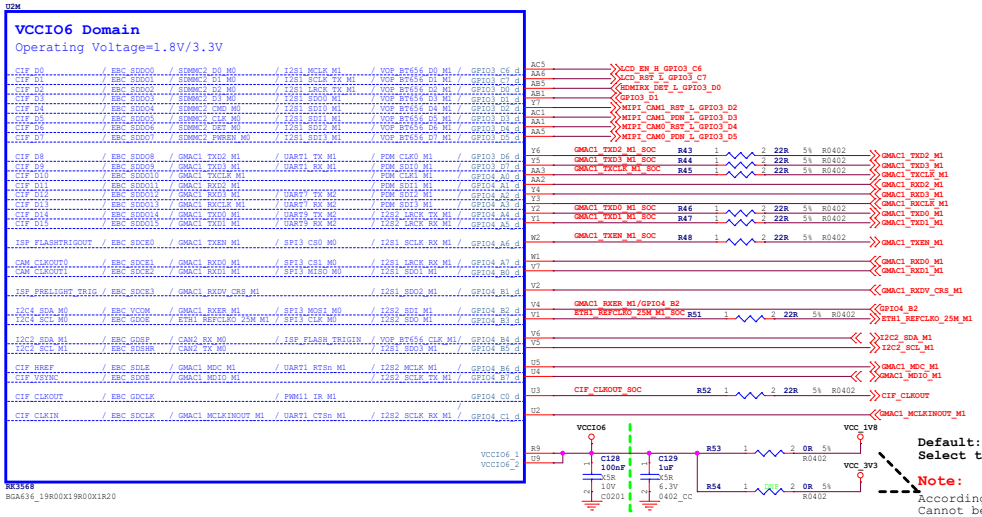

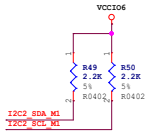

Default:1.8V
Select the voltage according to the application

Note:
According to the actual choice of mounted
Cannot be mounted at the same time

Note:
If the power domain voltage is adjusted, the software configuration must be updated synchronously, other wise the IO may be damaged!

Note:
Caps of between dashed green lines and U1000 should be placed under the U1000 package.
Other caps should be placed close to the U1000 package

Mode	16bit	12bit	10bit	8bit
CIF_D0	D0	--	--	--
CIF_D1	D1	--	--	--
CIF_D2	D2	--	--	--
CIF_D3	D3	--	--	--
CIF_D4	D4	D0	--	--
CIF_D5	D5	D1	--	--
CIF_D6	D6	D2	D0	--
CIF_D7	D7	D3	D1	--
CIF_D8	D8	D4	D2	D0
CIF_D9	D9	D5	D3	D1
CIF_D10	D10	D6	D4	D2
CIF_D11	D11	D7	D5	D3
CIF_D12	D12	D8	D6	D4
CIF_D13	D13	D9	D7	D5
CIF_D14	D14	D10	D8	D6
CIF_D15	D15	D11	D9	D7

RK3568_R(MIPI_DSI_TX0/LVDS_TX0)

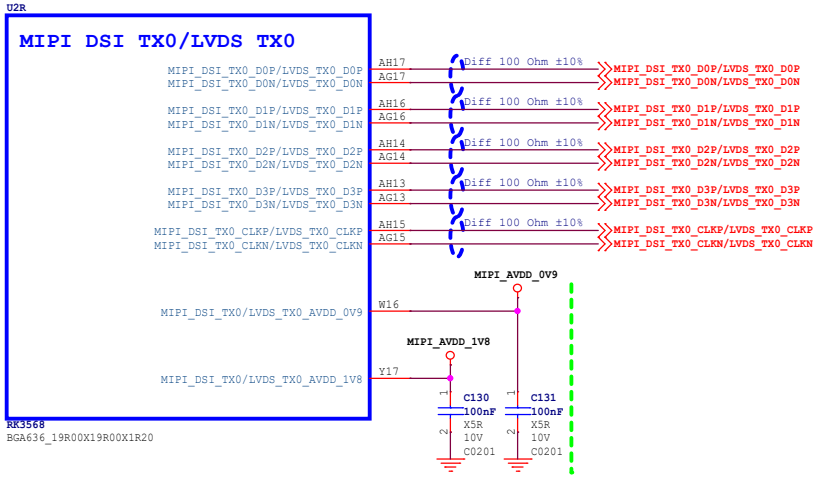

RK3568_S(MIPI_DSI_TX1)

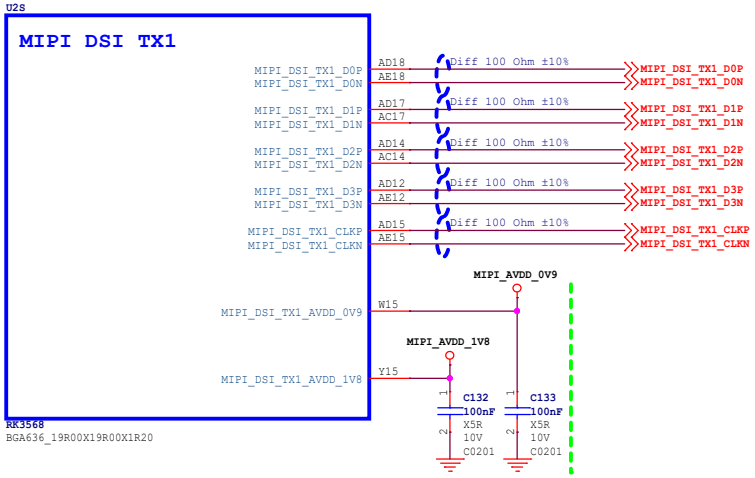

RK3568_T(eDP TX)

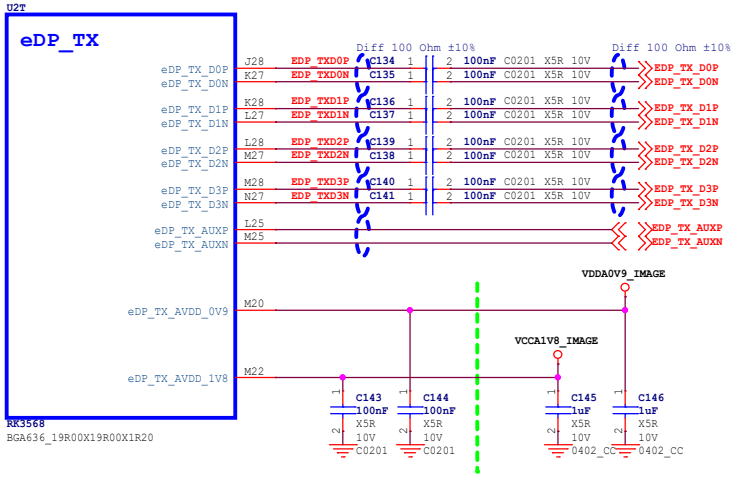

Note:
Caps of between dashed green lines and U1000
should be placed under the U1000 package.
Other caps should be placed close to the U1000 package

RK3568_Q(HDMI2.0 TX)

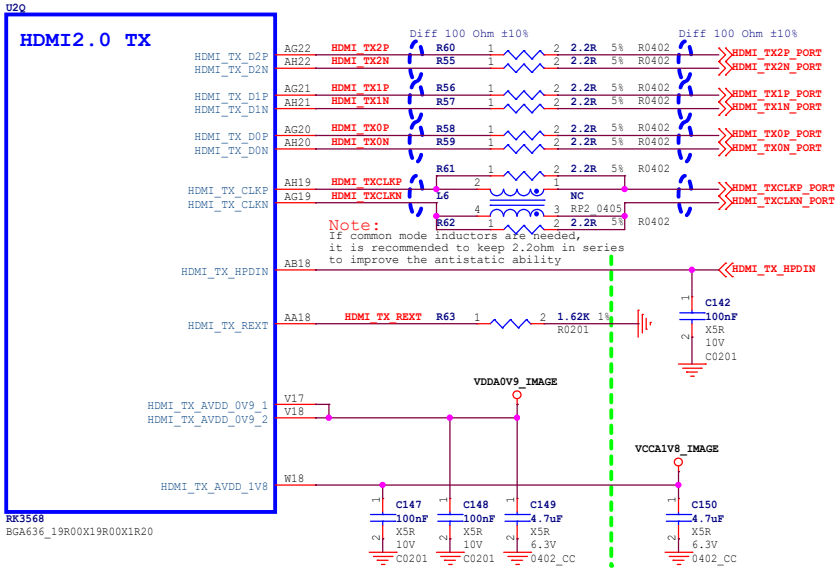

TOPEET 迅为 北京迅为电子有限公司					
Project:	iTOP-3568				
File:	topeet_rk3568_coreddr4x2_v1_1				
Date:	Friday, November 20, 2020			Rev:	V1.1
Designed by:	TOPEET	Reviewed by:	TOPEET	Sheet:	11 of 20

RK3568_L(VCCIO5 Domain)

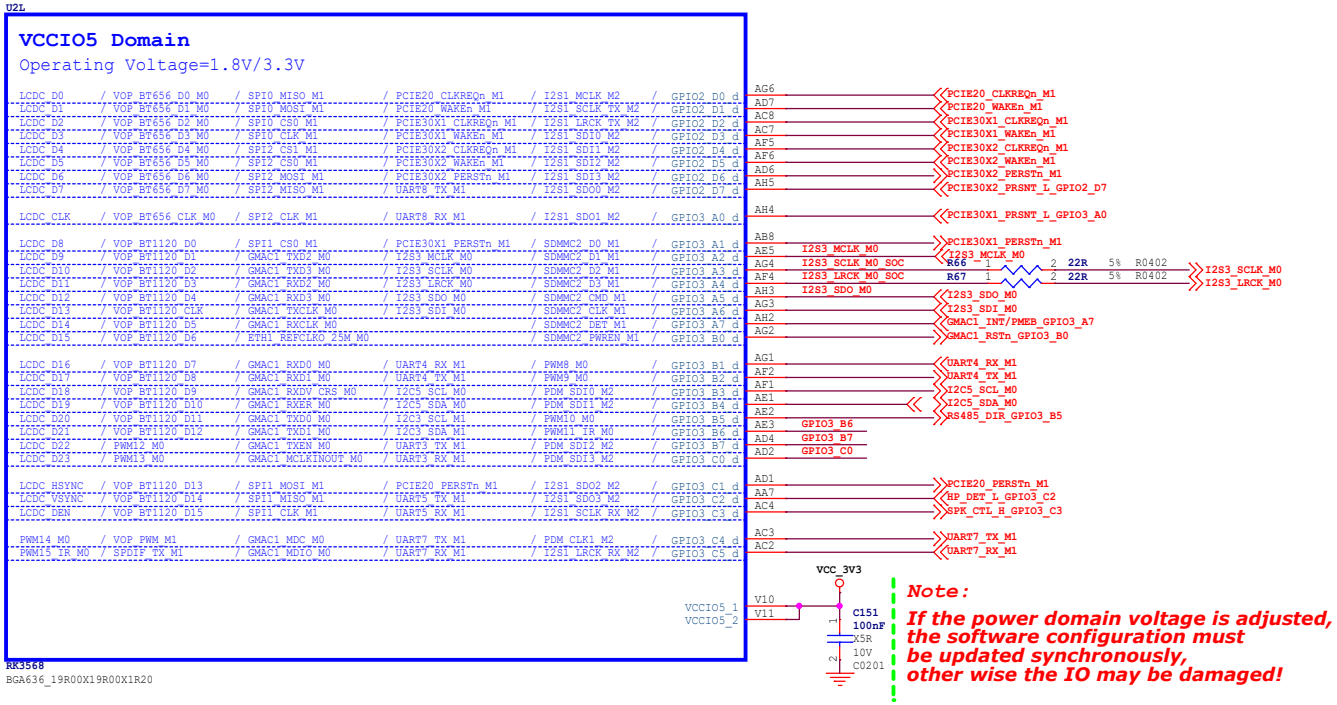

Note:

If the power domain voltage is adjusted, the software configuration must be updated synchronously, other wise the IO may be damaged!

Note:

Caps of between dashed green lines and U1000 should be placed under the U1000 package

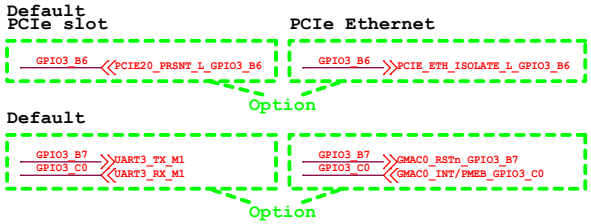

TOPEET 迅为 北京迅为电子有限公司					
Project:	iTOP-3568				
File:	topeet_rk3568_coreddr4x2_v1_1				
Date:	Friday, November 20, 2020			Rev:	V1.1
Designed by:	TOPEET	Reviewed by:	TOPEET	Sheet:	12 of 20

RK3568_H(VCCIO1 Domain)

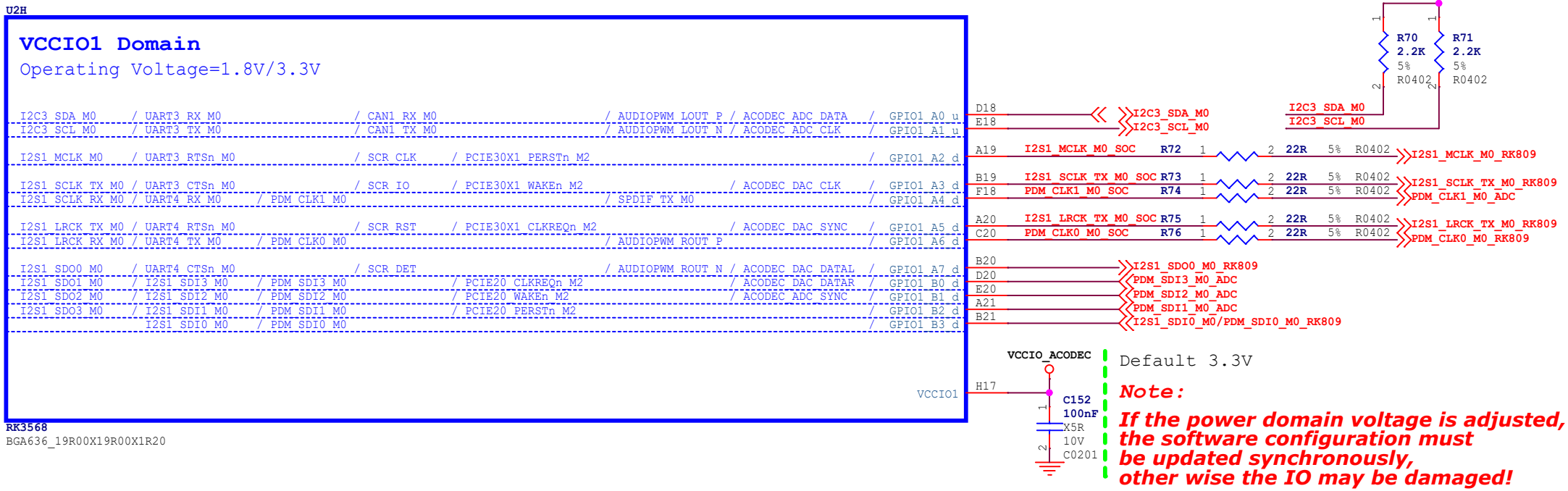

Note:

Caps of between dashed green lines and U1000 should be placed under the U1000 package

TOPEET 迅为 北京迅为电子有限公司					
Project:	iTOP-3568				
File:	topeet_rk3568_coreddr4x2_v1_1				
Date:	Friday, November 20, 2020			Rev:	V1.1
Designed by:	TOPEET	Reviewed by:	TOPEET	Sheet:	13 of 20

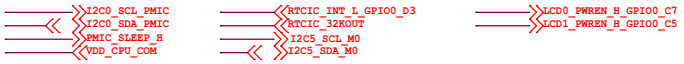

VDD_CPU

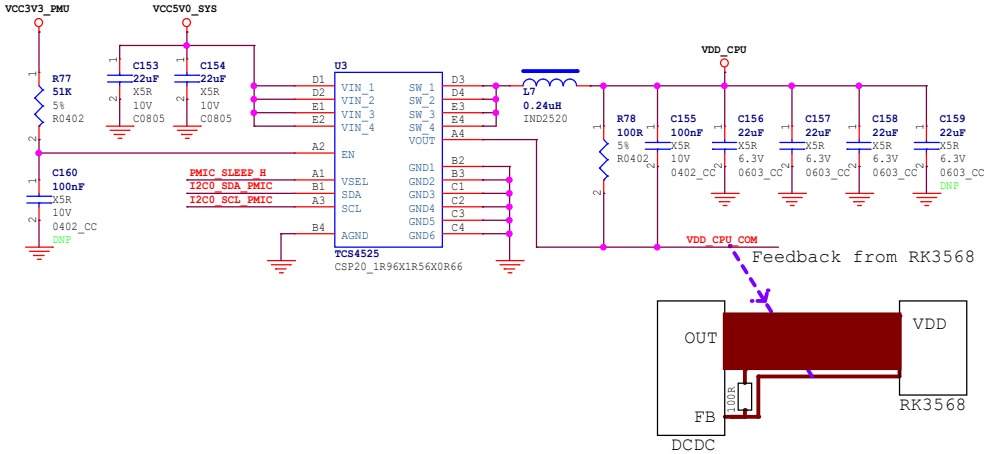

TOPEET 迅为 北京迅为电子有限公司					
Project:	ITOP-3568				
File:	topeet_rk3568_coreddr4x2_v1_1				
Date:	Friday, November 20, 2020			Rev:	V1.1
Designed by:	TOPEET	Reviewed by:	TOPEET	Sheet:	14 of 20

Flash Power Manage

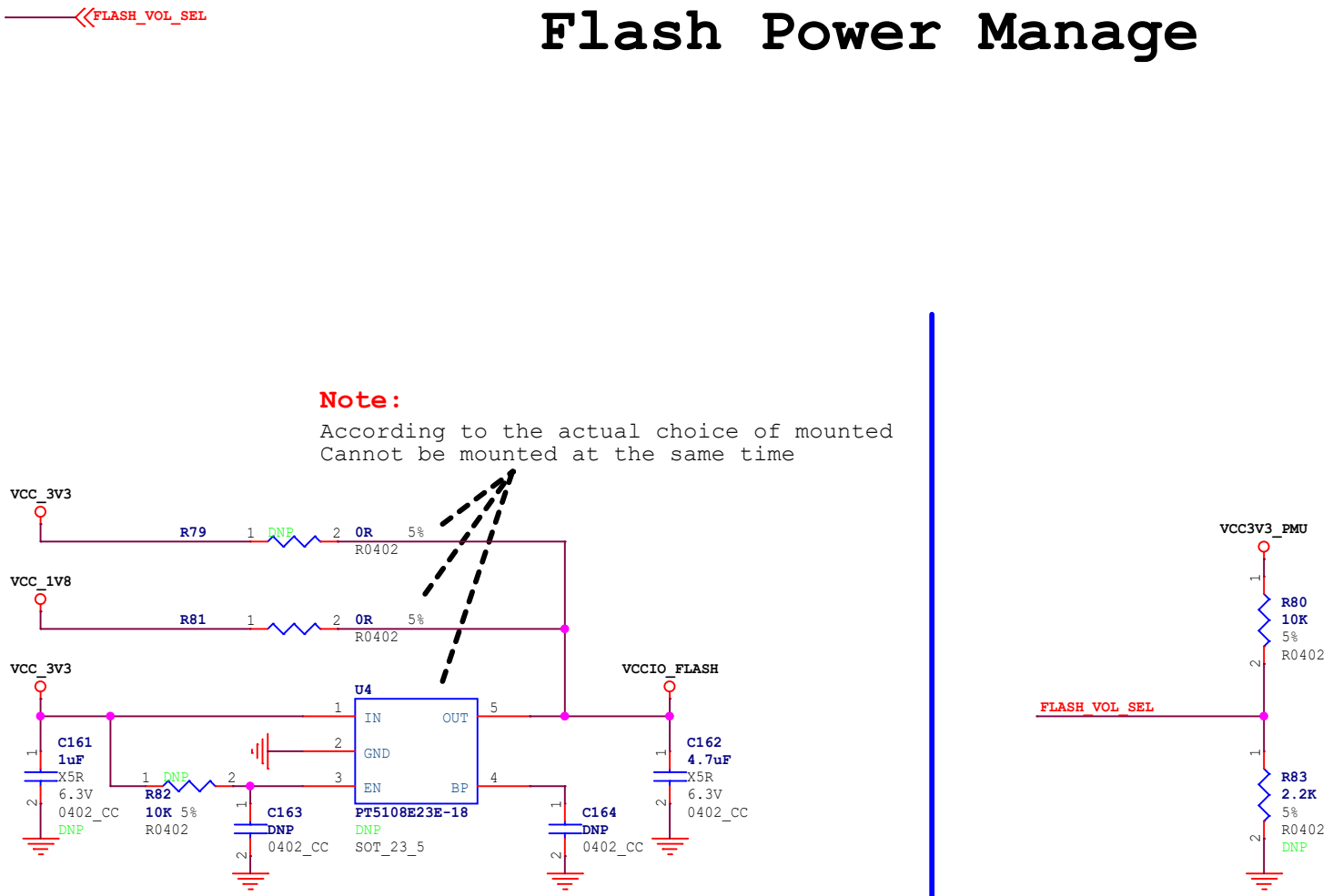

TOPEET 迅为 北京迅为电子有限公司					
Project:	iTOP-3568				
File:	topeet_rk3568_coreddr4x2_v1_1				
Date:	Friday, November 20, 2020			Rev:	V1.1
Designed by:	TOPEET	Reviewed by:	TOPEET	Sheet:	15 of 20

DDR4P216SD6

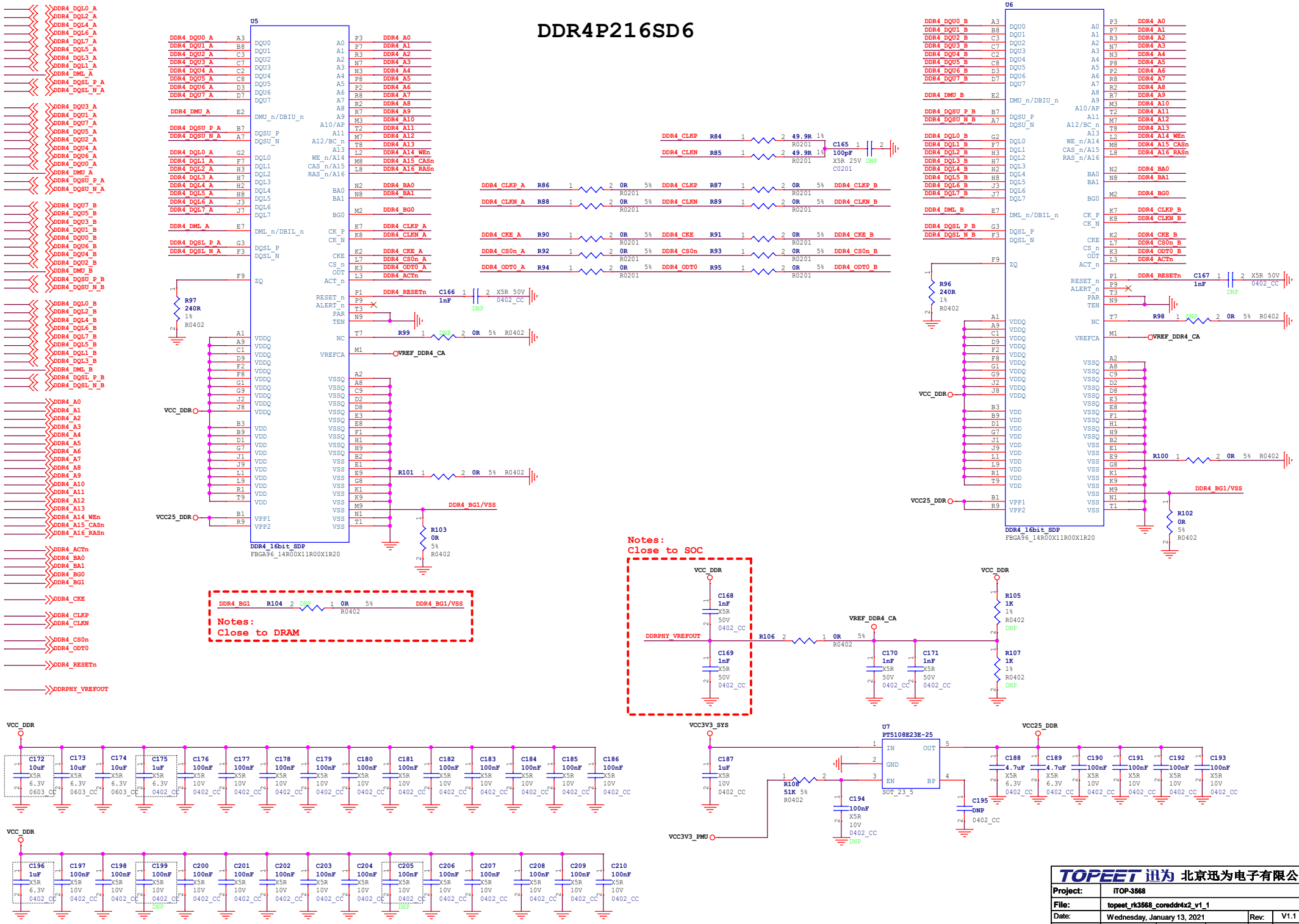

TOPEET 迅为 北京迅为电子有限公司			
Project:	iTOP-3568		
File:	topeet_rk3568_coreddr4x2_v1_1		
Date:	Wednesday, January 13, 2021	Rev:	V1.1
Designed by: TOPEET	Reviewed by: TOPEET	Sheet:	16 of 20

eMMC Flash

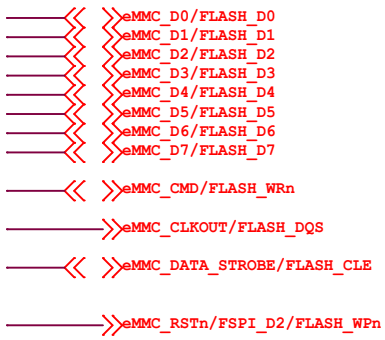

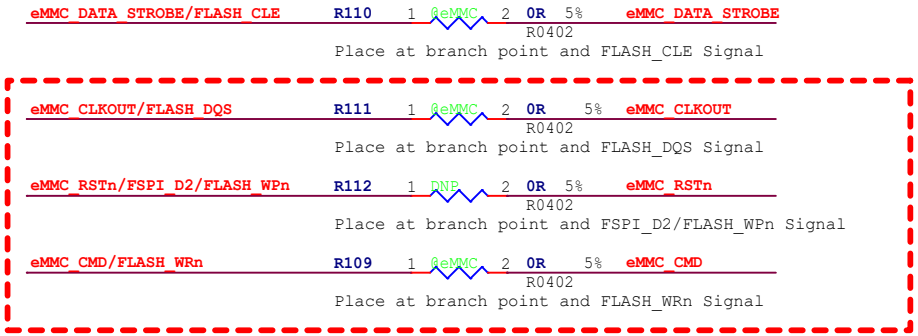

Note:

No need to double layout with Nand Flash, 0R resistor can be omitted

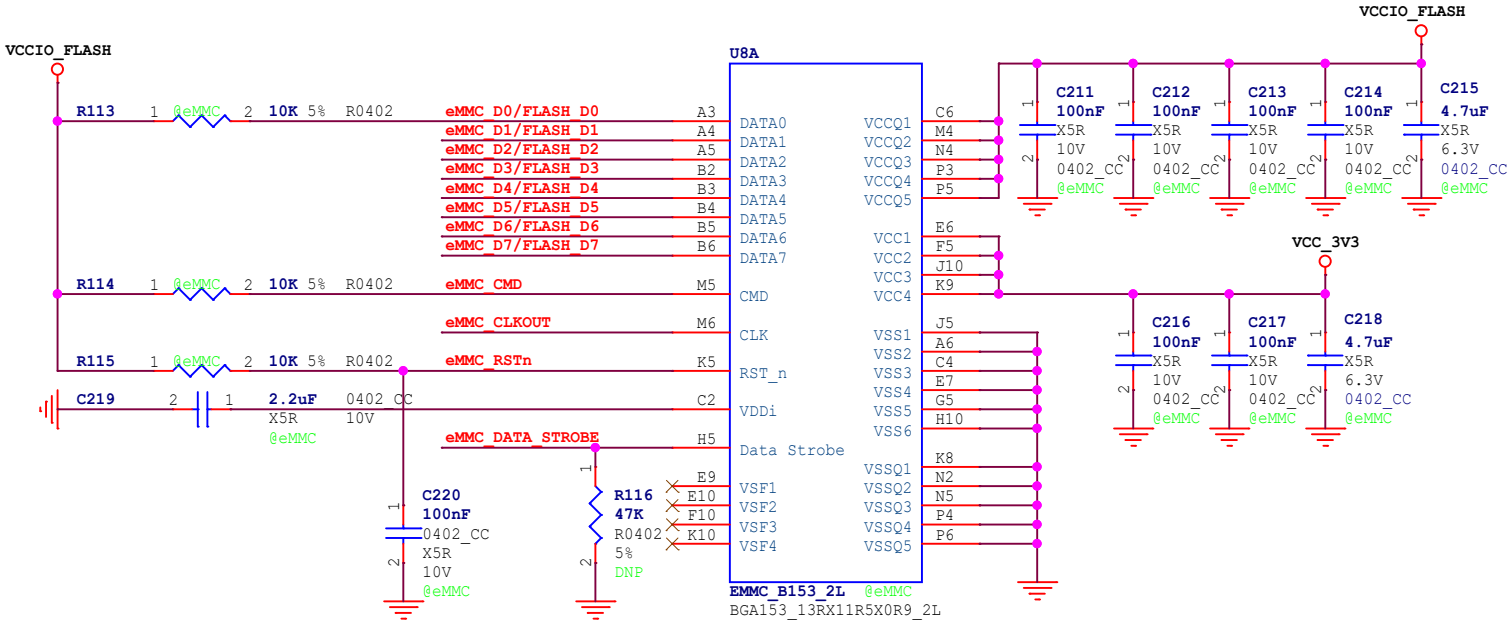

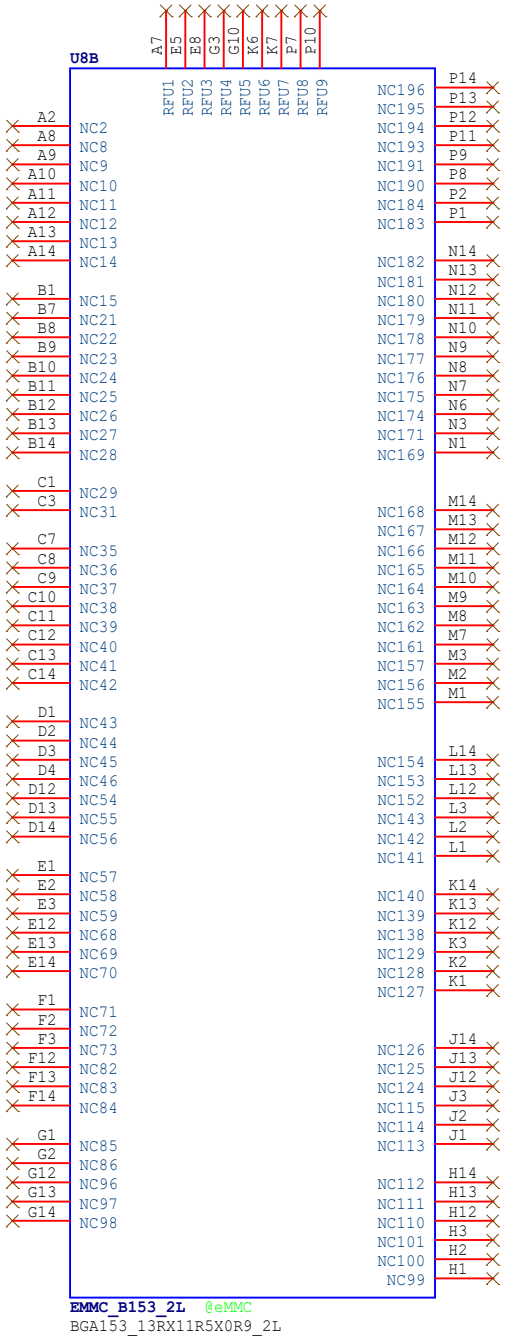

TOPEET 迅为 北京迅为电子有限公司					
Project:	iTOP-3568				
File:	topeet_rk3568_coreddr4x2_v1_1				
Date:	Friday, November 20, 2020			Rev:	V1.1
Designed by:	TOPEET	Reviewed by:	TOPEET	Sheet:	17 of 20

Nand Flash

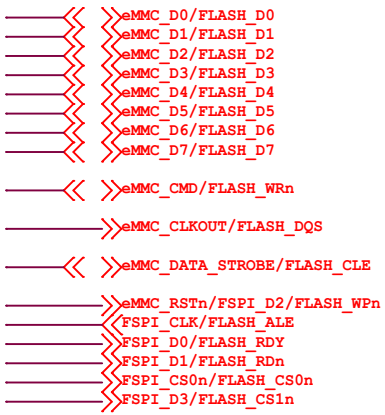

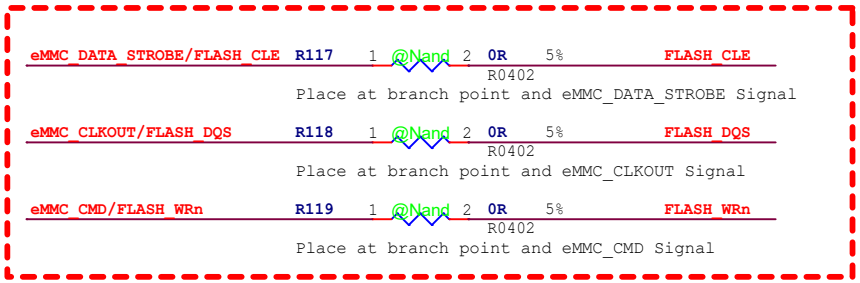

Note:

No need to double layout with eMMC, 0R resistor can be omitted

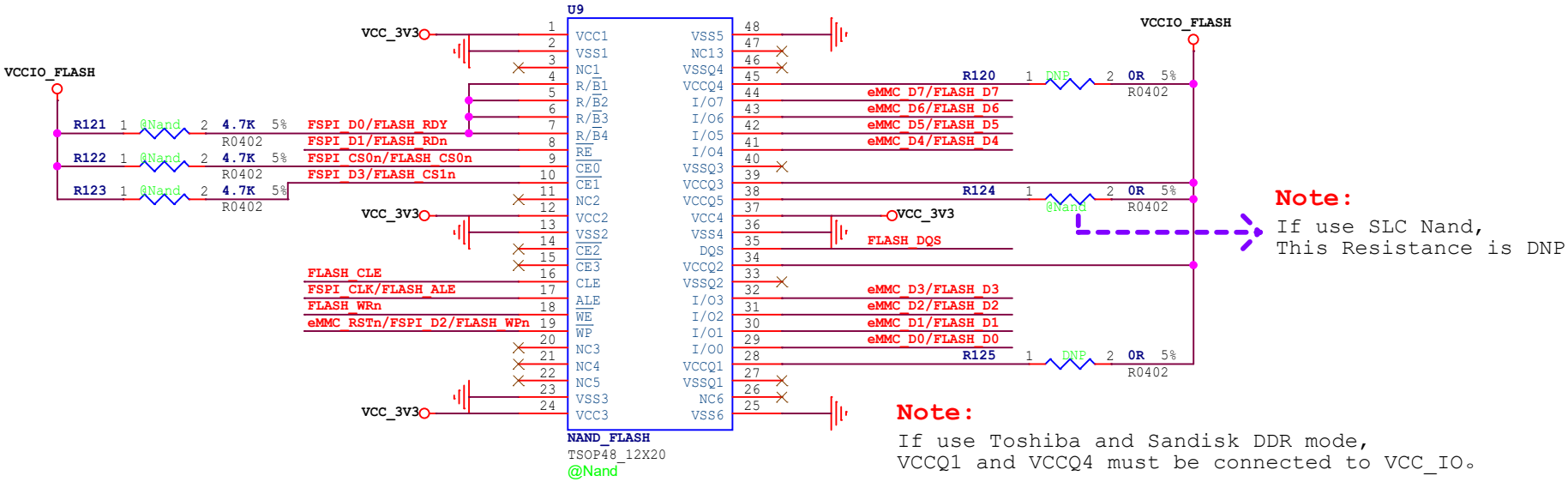

Note:

If use SLC Nand,
This Resistance is DNP

Note:

If use Toshiba and Sandisk DDR mode,
VCCQ1 and VCCQ4 must be connected to VCC_IO。

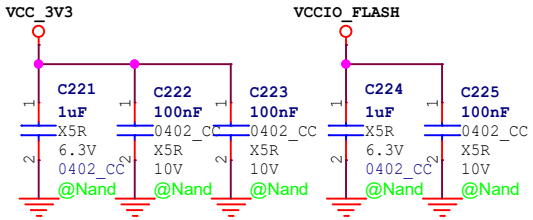

TOPEET 迅为 北京迅为电子有限公司					
Project:	iTOP-3568				
File:	topeet_rk3568_coreddr4x2_v1_1				
Date:	Friday, November 20, 2020			Rev:	V1.1
Designed by:	TOPEET	Reviewed by:	TOPEET	Sheet:	18 of 20

SPI Flash

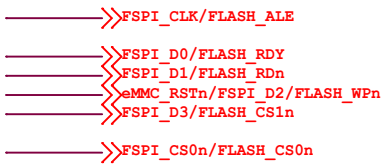

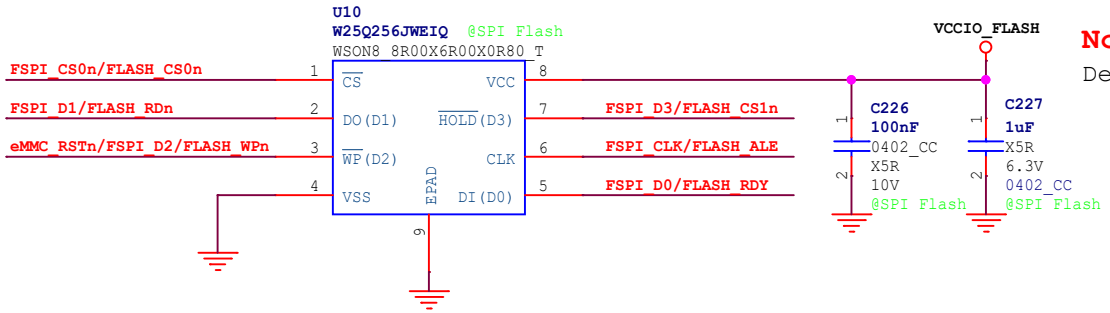

Note:

Default: 1.8V

Support:
1bit SPI NOR or SPI NAND
4bit SPI NOR or SPI NAND

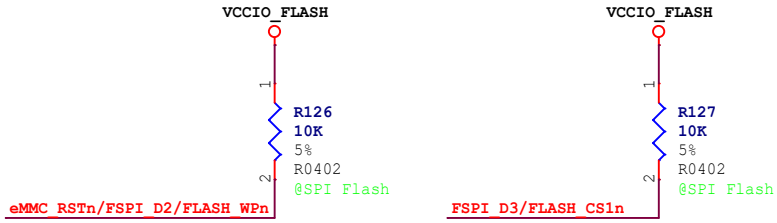

TOPEET 迅为 北京迅为电子有限公司					
Project:	iTOP-3568				
File:	topeet_rk3568_coreddr4x2_v1_1				
Date:	Friday, November 20, 2020			Rev:	V1.1
Designed by:	TOPEET	Reviewed by:	TOPEET	Sheet:	19 of 20

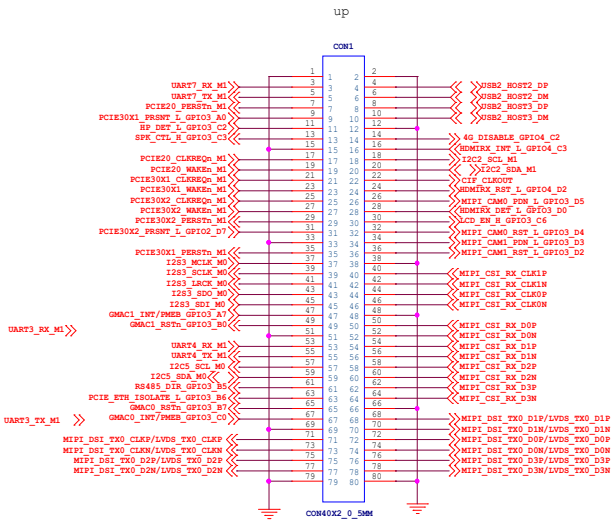

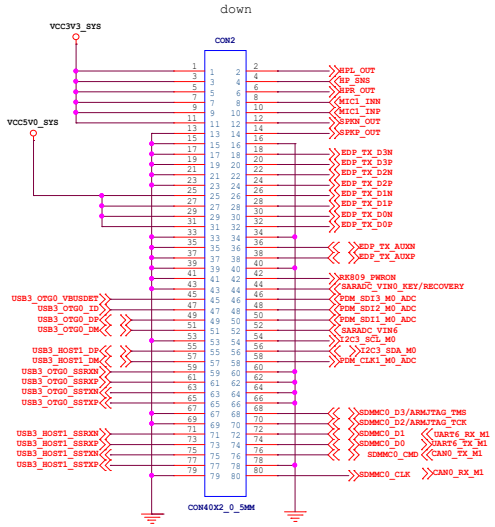

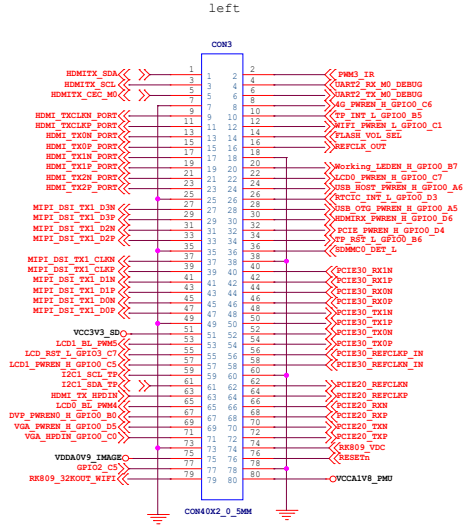

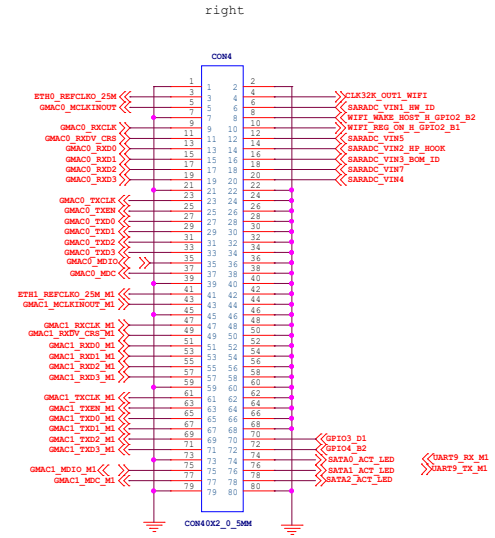

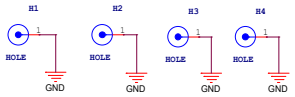

TOPEET 迅为 北京迅为电子有限公司					
Project:	ITOP-3568				
File:	topeet_rk3568_coreddr4x2_v1_1				
Date:	Friday, November 20, 2020			Rev:	V1.1
Designed by:	TOPEET	Reviewed by:	TOPEET	Sheet:	20 of 20