Sampe Approval Drawing

客户			
CUSTOME			
日期	**2015．05．15**		
Date			
产品型号	**R8723BT1（RTL8723BU）WFI+BT4.0 无线模块**		
Product Type			
料号			
Part No			
ENGINEER	**QC**	**SALES**	
客户承认栏			
ENGINEER	**QC**	**MANUFACTORY**	**PURCHASING**

联系人：卢先生　　MO:18878864007

1. General Description

R8723BT1 product Accord with FCC CE and is a small size and low profile of WiFi+BT combo module with LGA (Land-Grid Array) footprint, board size is 13.4mm*12.0 mm with module height 0.6mm. It is 150 wireless USB adapter which has lower power consumption, high linearity output power, accords with IEEE802.11B/G/N, and supports IEEE802.11i safety protocol, along with IEEE 802.11e standard service quality. It connects with other wireless device which accorded with these standards together, supports the new data encryption on 64/128 bit WEP and safety mechanism on WPA-PSK/WPA2-PSK, WPA/WPA2.Its wireless transmitting rate rises 150M, equivalent to 10 times of common 11b product. The inner AI high gain ceramics antenna adapts different kinds of work environment. It's easy and convenient to link to wireless network for the users using desktop, laptop and other device that needs connect to wireless network.

The WiFi throughput can go up to 150Mbps in theory by using 1x1 802.11n b/g/n MIMO technology and Bluetooth can support BT2.1+EDR/BT3.0 and BT4.0.

2. The range of applying

TV、MID, networking camera, STB GPS, E-book, Hard disk player, Network Radios, PSP, etc, the device which need be supported by wireless networking.

3. Features

Feature	**Implementation**
Power supply	VCC_3.3V +-0.2V
Clock source	40MHz
Temperature range	Work temperature: -20ºC---70ºC Storage temperature -40°C ~ +80°C
The connect type of Antenna	Connect to the 6th pin of Module
Package	SMT 10 pins
WLAN and BT features	
General features	■ CMOS MAC, Baseband PHY, and RF in a single chip for IEEE 802.11b/g/n compatible WLAN ■ Complete 802.11n solution for 2.4GHz band ■ 72.2Mbps receive PHY rate and 72.2Mbps transmit PHY rate using 20MHz bandwidth ■ 150Mbps receive PHY rate and 150Mbps transmit PHY rate using 40MHz bandwidth ■ Compatible with 802.11n specification ■ Backward compatible with 802.11b/g devices while operating in

	802.11n mode ■ Qualified BT 2.1, BT 3.0 and BT 4.0 Dual mode ■ Support for Bluetooth Low Energy ■ Integrated class 1, class 2, and class 3 PA and modem in Bluetooth Controlle
Host Interface	■ Complies with USB Specification Revision 2.0
Standards Supported	■ IEEE 802.11b/g/n compatible WLAN ■ IEEE 802.11e QoS Enhancement (WMM) ■ IEEE 802.11h TPC, Spectrum Measurement ■ 802.11i (WPA, WPA2). Open, shared key, and pair-wise key authentication services ■ BT v2.1, EDR/BT v3.0 and HS/BT v4.0
WLAN MAC Features	■ Frame aggregation for increased MAC efficiency (A-MSDU, A-MPDU) ■ Low latency immediate High-Throughput Block Acknowledgement (HT-BA) ■ Long NAV for media reservation with CF-End for NAV release ■ PHY-level spoofing to enhance legacy compatibility ■ Power saving mechanism ■ Channel management and co-existence ■ Transmit Opportunity (TXOP) Short Inter-Frame Space (SIFS) bursting for higher multimedia bandwidth
WLAN PHY Features	■ IEEE 802.11n OFDM ■ One Transmit and one Receive path (1T1R) ■ 20MHz and 40MHz bandwidth transmission ■ Short Guard Interval (400ns) ■ DSSS with DBPSK and DQPSK, CCK modulation with long and short preamble ■ OFDM with BPSK, QPSK, 16QAM, and 64QAM modulation. Convolutional Coding Rate: 1/2, 2/3, 3/4, and 5/6 ■ Maximum data rate 54Mbps in 802.11g and 150Mbps in 802.11n ■ Switch diversity for DSSS/CCK ■ Hardware antenna diversity ■ Selectable receiver FIR filters ■ Programmable scaling in transmitter and receiver to trade quantization noise against increased probability of clipping Fast ■ receiver Automatic Gain Control (AGC) ■ On-chip ADC and DAC

BT Controller	■ 1Mbps for Basic Rate; 2,3Mbps for Enhanced Data Rate; 6,9,12,18,24,36,48,54Mbpsfor High Speed ■ AFH, Time Division for Media Access Control ■ 8DPSK, π/4 DQPSK, GFSK for Modulation Techniques ■ PCM interface for audio data transmission via BT controller. ■ Integrated MCU to execute Bluetooth protocol stack ■ Support all packet types in basic rate and enhanced data rate ■ Support SCO / eSCO link (allow one link for PCM interface and three links for HS-UART) ■ Support 4 piconets in a scattern ■ Support Secure Simple Pairing ■ Support Low Power Mode (Sniff / Sniff Sub-rating / Hold / Park) ■ Enhanced BT/WIFI Coexistence Control to improve transmission quality in different profiles ■ Bluetooth 4.0 Dual Mode support: Simultaneous LE and BR/EDR ■ Support multiple states of Low Energy to increase the flexibility of application
Bluetooth Transceiver Features	■ Fast AGC control to improve receiving dynamic range ■ Support AFH to dynamically detect channel quality to improve transmission quality ■ Integrated internal class 1, class 2, and class 3 PA ■ Bluetooth 3.0+HS compliant ■ Power Control / Enhanced Power Control Supported ■ Bluetooth Low Energy supported ■ Integrated 32K oscillator for power management

4. DC Characteristics

Symbol	Parameter	Minimum	Typical	Maximum	Units
VD33A, VD33D	3.3V I/O Supply Voltage	3.0	3.3	3.6	v
VD28A, VD28D	1.2V Core Supply Voltage	1.10	1.2	1.32	v
VD15A, VD15D	1.5V Supply Voltage	1.425	1.5	1.575	v

5. Functional Specifications

Standards	*WiFi:* IEEE 802.11b, IEEE 802.11g, Draft IEEE 802.11n, IEEE 802.11d, IEEE 802.11e, IEEE 802.11h, IEEE 802.11i *BT:* V2.1+EDR/BT v3.0/BT v3.0+HS
Bus Interface	USB2.0
Form Factor	L*W*H = 15mm*12mm*1.8mm
Data Rate	**802.11b:** 11, 5.5, 2, 1 Mbps **802.11g:** 54, 48, 36, 24, 18, 12, 9, 6 Mbps **802.11n:** MCS 0 to 7 for HT20MHz MCS 0 to 7 for HT40MHz BT: 1 Mbps for Basic Rate 2,3 Mbps for Enhanced Data Rate 6,9,12,18,24,36,48,54 Mbps for High Speed
Media Access Control	*WiFi:* CSMA/CA with ACK *BT:* AFH, Time Division
Modulation Techniques	*802.11b*: CCK, DQPSK, DBPSK *802.11g*: 64 QAM, 16 QAM, QPSK, BPSK *802.11n*: 64 QAM, 16 QAM, QPSK, BPSK *BT*: 8DPSK, π/4 DQPSK, GFSK
Network Architecture	*WiFi*:

<table>
<tr><td></td><td colspan="3">Infrastructure mode
Software AP
WiFi Direct
BT:
Pico Net
Scatter Net</td></tr>
<tr><td>Operating Channel</td><td colspan="3">WiFi 2.4GHz:
11: (Ch. 1-11) – United States
13: (Ch. 1-13) – Europe
14: (Ch. 1-14) – Japan
BT 2.4GHz:
Ch. 0 ~78</td></tr>
<tr><td>Frequency Range</td><td colspan="3">2.400GHz ~ 2.4835 GHz</td></tr>
<tr><td rowspan="2">Transmit Output Power – 1x1
(Tolerance: ±1.5dBm)</td><td>802.11b@11Mbps
16dBm</td><td>802.11g@6Mbps
16dBm
802.11g@54Mbps
14dBm</td><td>802.11n
16dBm (MCS 0_HT20)
13dBm (MCS 7_HT20)
13dBm (MCS 0_HT40)
13dBm (MCS 7_HT40)</td></tr>
<tr><td colspan="3">BT:
Max +10dBm</td></tr>
<tr><td rowspan="2">Receiver Sensitivity</td><td>802.11b@11Mbps
-82dBm</td><td>802.11g@54Mbps
-71dBm</td><td>802.11n
-67dBm (MCS 7_HT20)
-64dBm (MCS 7_HT40)</td></tr>
<tr><td colspan="3">BT:
-89dBm@1Mbps, -90dBm@2Mbps, -83dBm@3Mbps</td></tr>
<tr><td>Security</td><td colspan="3">WiFi :
WPA, WPA-PSK, WPA2, WPA2-PSK, WEP 64bit & 128bit, IEEE 802.11x, IEEE 802.11i
BT:
Simple Paring</td></tr>
<tr><td>Operating Voltage</td><td colspan="3">3.3 V ±9% I/O supply voltage</td></tr>
</table>

Power Consumption (3.3V) (Typical)	***WiFi :*** ***TX Mode: (Conituous mode)*** 190mA (MCS7/BW40/13dBm) ***RX Mode: (Conituous mode)*** 150mA (MCS7/BW40/-60dBm) ***Associated Idle:*** 120mA ***Unassociated Idle:*** 130mA ***RF disable Mode:*** 120mA ***BT :*** ***Inquiry & Page Scan:*** 1.7mA ***ACL no traffic:*** 15mA ***SCO HV3:*** 30mA ***Parked 1.28s beacon:*** 1.12mA ***Reset:*** 0.05mA

6.The block diagram of product principle

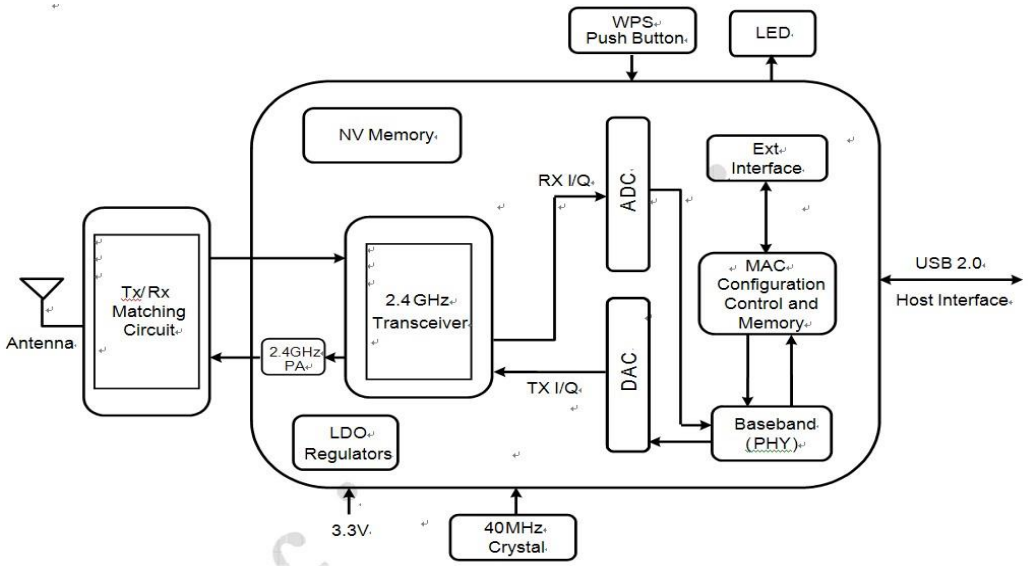

Figure 1. Single-Band 11n (1x1) Solution (11n 1x1 MAC/BB/RF+PA)

7.The supported platform

Operating System	CPU Framework	Driver
WIN2000/XP/VISTA/WIN7	X86 Platform	Enable
LINUX2.4/2.6	ARM, MIPSII	Enable
WINCE5.0/6.0	ARM ,MIPSII	Enable

8. The definition of product Pin

TOP **Bottom**

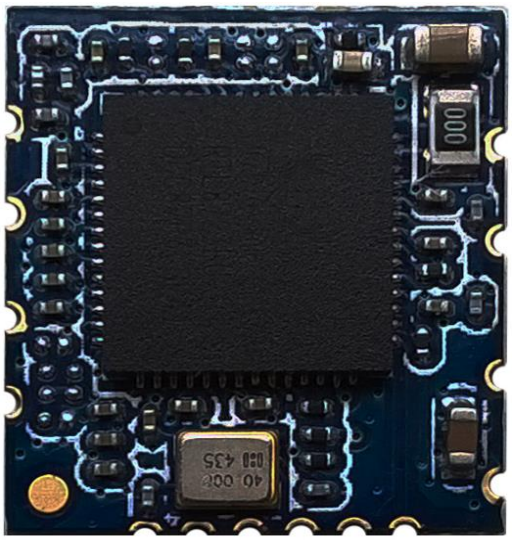

Top and bottom view of R8723BT1

9.Product Pin Definition

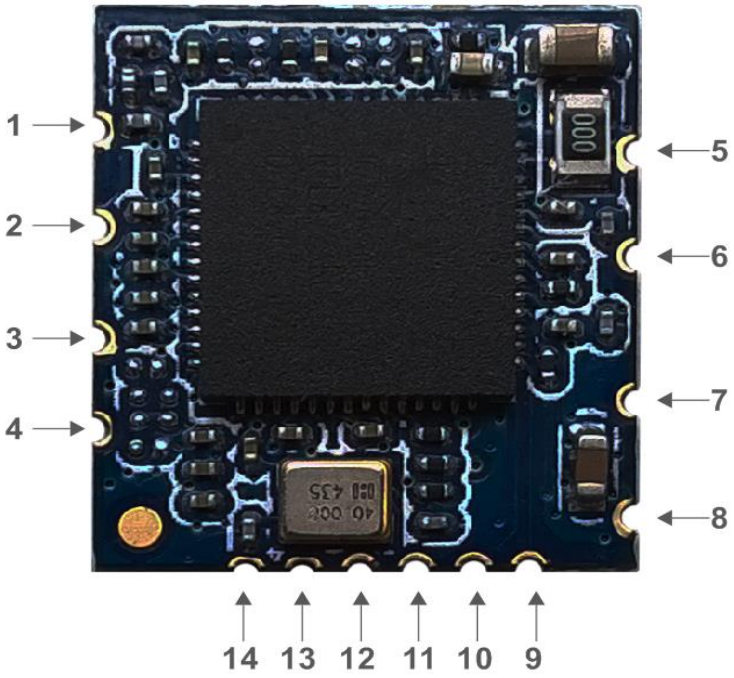

Pin No:	Function	Description
1	GND	Ground
2	RF0	WLAN/BT RF TX/RX signal0
3	RF1	
4	XIN	40MHz crystal reference clock input
5	GND	Ground
6	D+	High-Speed USB D+ Signal
7	D-	High-Speed USB D- Signal
8	VCC33	VDD3.3V for Digital IO
9	SUSPEND	Host wakeup pin
10	WO_WLAN	Host wakeup pin
11	BT_PCM_CLK	PCM clock
12	BT_PCM_SYNC	PCM sync
13	BT_PCM_OUT	PCM output
14	BT_PCM_IN	PCM input

10. The Structure and Size of product（Tolerance : +/-0.2mm）

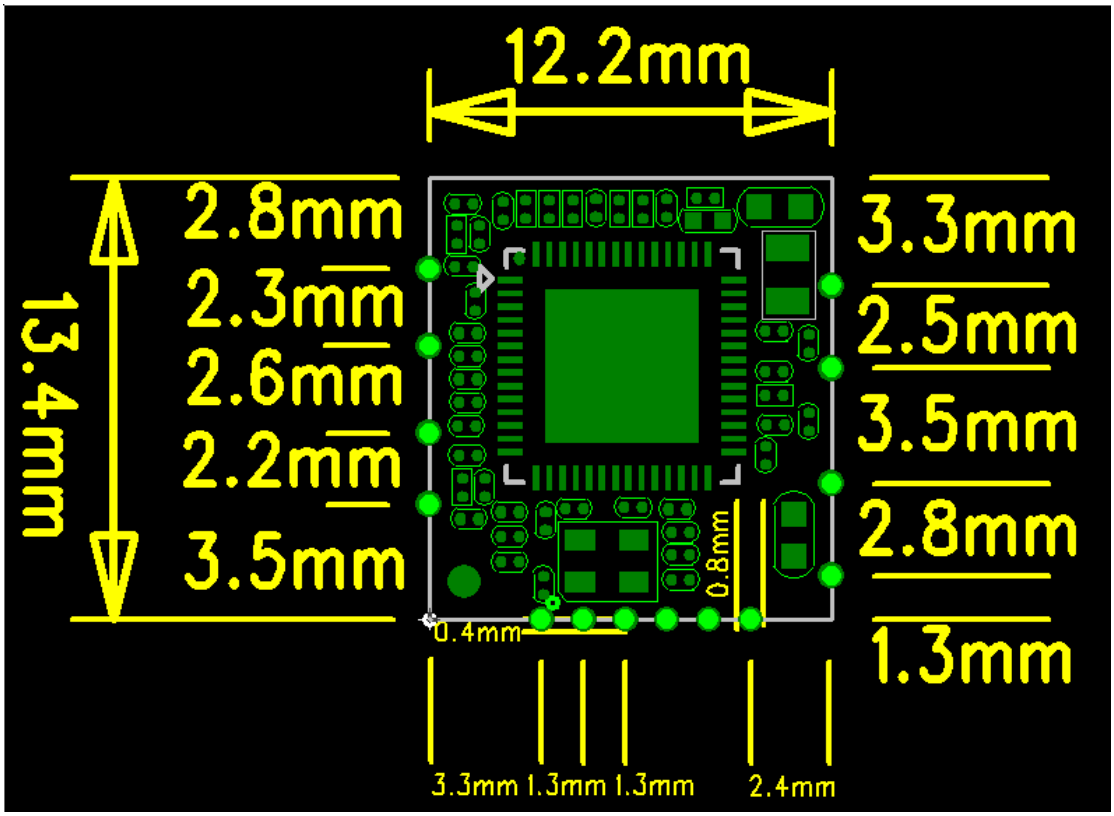

11: The ANT Pin connect to antenna, please refer to design demand

Connect to the 6th pin of Module

Connect to the 5th pin of Module

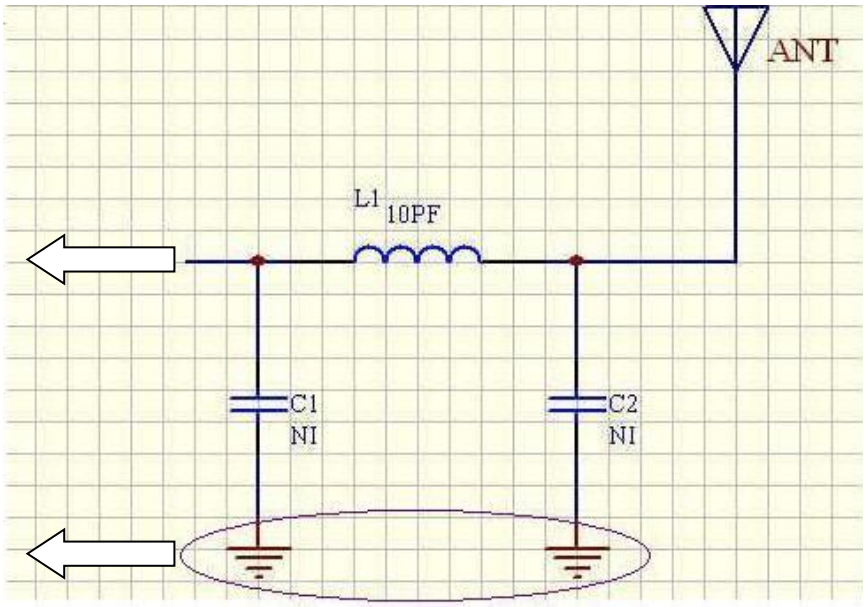

a) The current of 3.3V power supply must be >300mA, its ripple wave must be <30mV. The GND pins of module and external antenna need to be an incorporated part. The ground plane should be larger, module and antenna should keep far away from interference source.

b) The sixth pin is 2.4G high frequency output, coplanar impedance of layout line between this pin to antenna interface should be 50 Ω, we suggest use arc line or straight line, and beside the line there will be ground plane that its length as shout as possible, the longest length is no more than 50mm.

c) L1, C1, C2 constitute a π-type network that we preset, please make it close to antenna interface, this π-type network is used to match the antenna parameters and control the radiation. It should be adjusted according to the real condition when being used. Normally you can only mount L1 that its parameters are: 10pF, NP0 material. No need C1 and C2

USB interface Circuit reference pictures

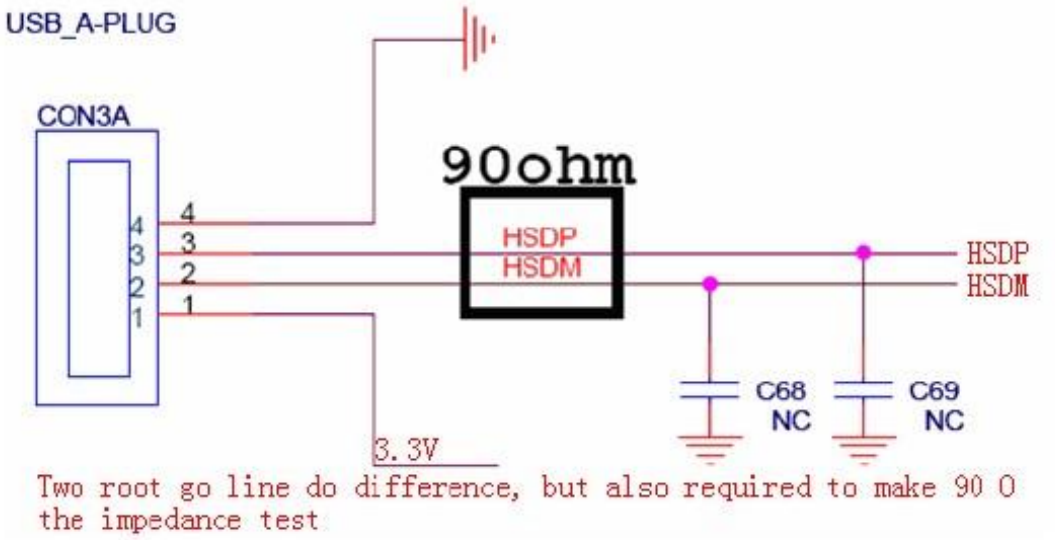

12．产品应用图解：

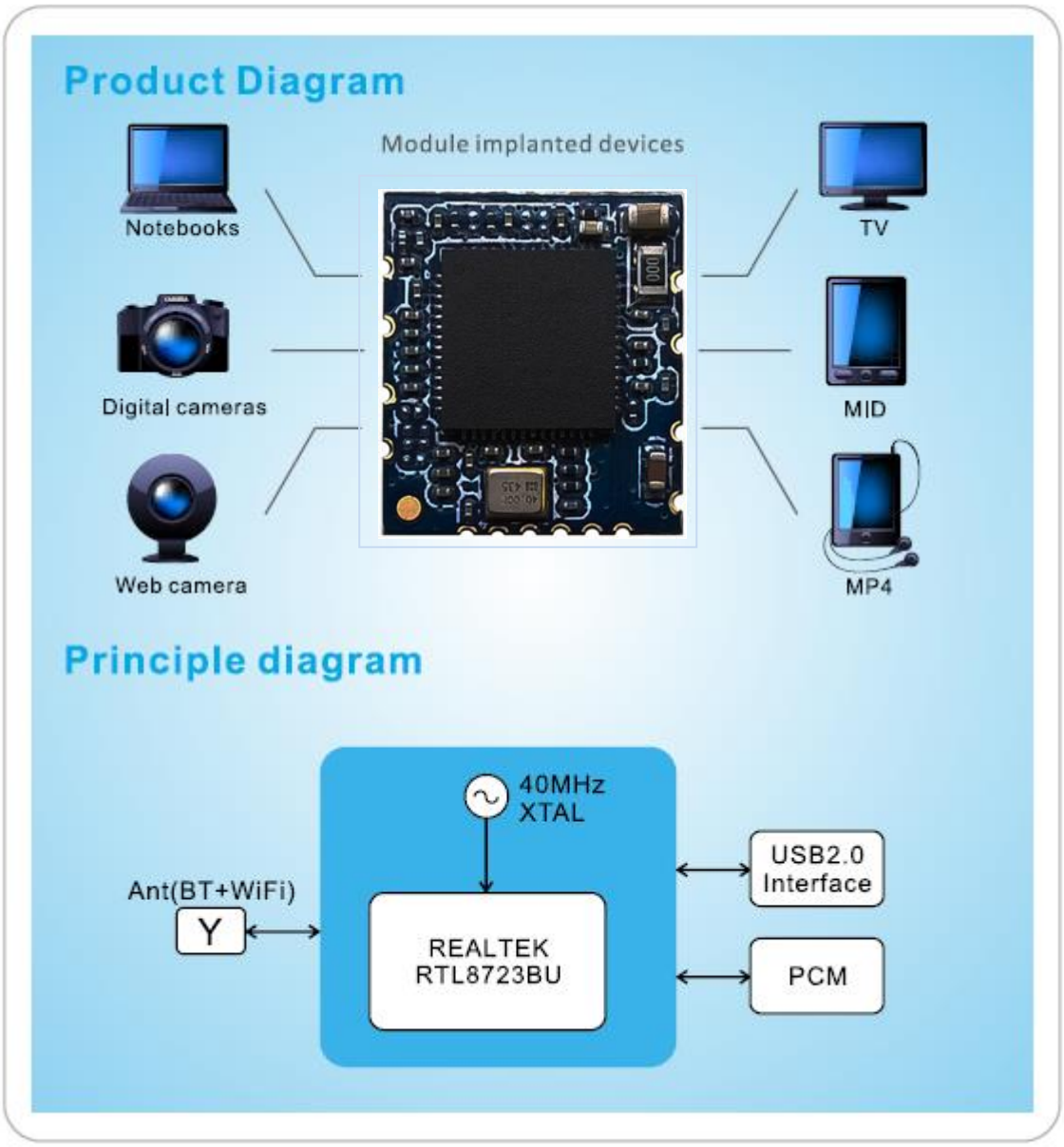
Product Diagram
Module implanted devices
Notebooks
Digital cameras
Web camera
TV
MID
MP4
Principle diagram
40MHz
XTAL
Ant(BT+WiFi)
Y
REALTEK
RTL8723BU
USB2.0
Interface
PCM

13.产品回流焊接温度参考曲线图：

Referred to IPC-A-610E-2010/JEDEC standard： Peak Temperature : ≤260°C，10sec. Max.

Number of Times : ≤2 times

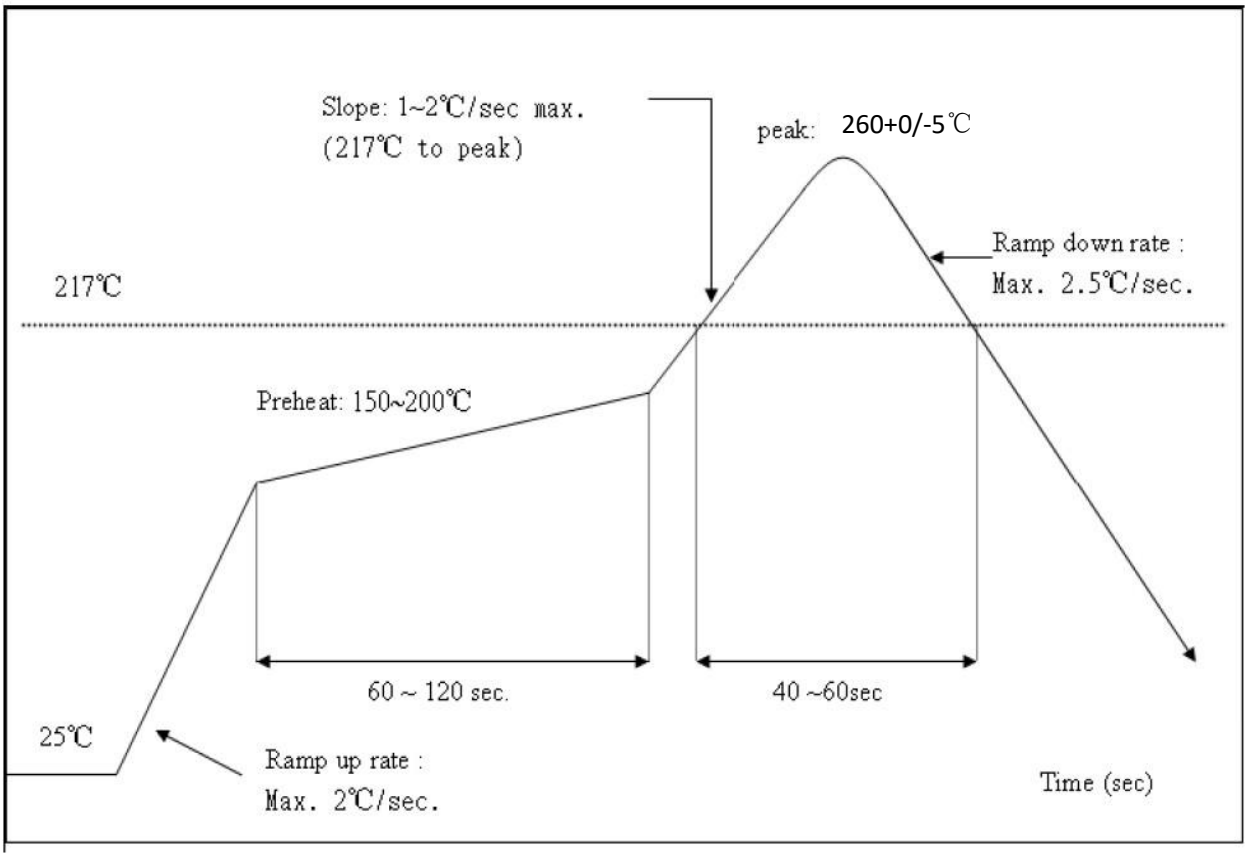

贴片**WIFI** 模块装机前的建议:

a) 客户在开钢网时一定要将**WIFI** 模块焊盘的孔开大，请按**1** 比**1**再向外扩大**0.7Mm** 比例来开，厚度按**0.12Mm**。

b）**WIFI** 模块是否需要烘烤，需根据在客户端的库存环境和时间长短来定：例如库存环境温度在20℃～30℃，湿度≤60％条件下，时间超出6个月以上, 在上线贴片前一定要烘烤**4**小时以上，温度在**120** 度**+-5** 度。

C）烘烤**OK** 后建议马上上线，不要一烘烤**OK** 后就将全部**WIFI** 模块拿出烘烤箱。建议每小时贴多少拿多少出来。

d）有需要拿**WIFI** 模时一定不要光着手去拿**WIFI** 模块，一定要戴上手套及静电环。
e）过炉温度要根据客户主板的大小而定。

f)尽量保证 WIFI 模块过一次回流焊,若需要二次过炉,必须采取防护措施.