OmniVision

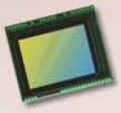

datasheet

PRELIMINARY SPECIFICATION

1/4" color CMOS 5 megapixel (2592 x 1944) image sensor
with OmniBSI+™ technology

OV5695

Copyright ©2015 OmniVision Technologies, Inc. All rights reserved.

This document is provided “as is” with no warranties whatsoever, including any warranty of merchantability, non-infringement, fitness for any particular purpose, or any warranty otherwise arising out of any proposal, specification, or sample.

OmniVision Technologies, Inc. and all its affiliates disclaim all liability, including liability for infringement of any proprietary rights, relating to the use of information in this document. No license, expressed or implied, by estoppel or otherwise, to any intellectual property rights is granted herein.

The information contained in this document is considered proprietary to OmniVision Technologies, Inc. and all its affiliates. This information may be distributed to individuals or organizations authorized by OmniVision Technologies, Inc. to receive said information. Individuals and/or organizations are not allowed to re-distribute said information.

Trademark Information

VarioPixel, OmniVision and the OmniVision logo are registered trademarks of OmniVision Technologies, Inc. OmniBSI+ is a trademark of OmniVision Technologies, Inc.

All other trademarks used herein are the property of their respective owners.

Confidential for Sida

color CMOS 5 megapixel (2592 x 1944) image sensor with OmniBSI+™ technology

datasheet (COB)
PRELIMINARY SPECIFICATION

version 1.01
september 2015

To learn more about OmniVision Technologies, visit www.ovt.com.
OmniVision Technologies is publicly traded on NASDAQ under the symbol OVTI.

applications

- smartphones and feature phones
- PC multimedia
- tablets
- wearables

ordering information

- **OV05695-GA4A** (color, chip probing, 200 µm backgrinding, reconstructed wafer)

features

- 1.4 µm x 1.4 µm pixel
- 5Mp at 30 fps
- programmable controls for frame rate, mirror and flip, cropping, and windowing
- supports images sizes: 5Mp (2592 x 1944), quad HD (2560 x 1440), 1080p (1920 x 1080), 720p (1280 x 720), VGA (640 x 480), and more
- 8 bytes of embedded one-time programmable (OTP) memory for customer use
- ultra low power mode (ULPM)
- support for output formats: 10-bit RGB RAW
- interleave row HDR output
- two-wire serial bus control (SCCB)
- MIPI serial output interface (1- or 2-lane)
- 2x binning support
- image quality control: defect pixel correction and automatic black level calibration

key specifications (typical)

- **active array size:** 2592 x 1944
- **power supply:**
  - analog: 2.7 to 3.0V (2.8V nominal)
  - core: 1.14 to 1.26V (1.2V nominal)
  - I/O: 1.7 to 1.9V (1.8V nominal)
- **power requirements:**
  - active: TBD
  - standby: TBD
  - XSHUTDN: 1 µW
- **temperature range:**
  - operating: -30°C to +70°C junction temperature (see **table 6-2**)
  - stable image: -20°C to +60°C junction temperature (see **table 6-2**)
- **output interface:** 2-lane MIPI serial output
- **output formats:** 10-bit RGB RAW
- **lens size:** 1/4"
- **input clock frequency:** 6~27 MHz
- **lens chief ray angle:** 31.08° non-linear (see **figure 8-2**)
- **maximum image transfer rate:**
  - 5Mp (2592 x 1944): 30 fps
  - quad HD (2560 x 1440): 30 fps
  - 1080p (1920 x 1080): 60 fps
  - 720p (1280 x 720): 60 fps
  - VGA (640 x 480): 120 fps
- **sensitivity:** TBD
- **max S/N ratio:** TBD
- **dynamic range:** TBD
- **pixel size:** 1.4 µm x 1.4 µm
- **dark current:** TBD
- **image area:** 3684 µm x 2763 µm
- **die dimensions:** 5022µm x 3933µm (COB), 5072µm x 3983µm (RW) (see **section 7** for details)

note COB refers to whole wafers with known good die and RW refers to singulated good die on a reconstructed wafer. Die size differs between COB and RW.

Confidential for Sida

Confidential for Sida

table of contents

1 signal descriptions 1-1
2 system level description 2-1
2.1 overview 2-1
2.2 architecture 2-1
2.3 format and frame 2-4
2.4 I/O control 2-4
2.5 MIPI interface 2-4
2.6 power management 2-5
2.6.1 power up sequence 2-5
2.6.2 power down sequence 2-7
2.7 reset 2-10
2.7.1 power ON reset 2-10
2.7.2 software reset 2-10
2.8 hardware and software standby 2-10
2.8.1 hardware standby 2-10
2.8.2 software standby 2-10
2.9 system clock control 2-11
2.9.1 PLL1 2-11
2.9.2 PLL2 2-11
2.10 serial camera control bus (SCCB) interface 2-13
2.10.1 data transfer protocol 2-13
2.10.2 message format 2-13
2.10.3 read / write operation 2-13
2.10.4 SCCB timing 2-17
2.11 group write 2-18
2.11.1 hold 2-18
2.11.2 launch 2-19
3 block level description 3-1
3.1 pixel array structure 3-1
3.2 subsampling 3-2
3.3 alternate row HDR 3-3
3.4 analog amplifier 3-5
3.5 10-bit A/D converters 3-5

Confidential for

4 image sensor core digital functions **4-1**
4.1 mirror and flip 4-1
4.2 image windowing 4-2
4.3 test pattern 4-4
4.4 black level calibration (BLC) 4-5
4.5 one time programmable (OTP) memory 4-6
4.5.1 OTP other functions 4-6
5 register tables **5-1**
5.1 PLL control [0x0100, 0x0103, 0x0300 - 0x0313, 0x031B - 0x031F] 5-1
5.2 system control [0x3000 - 0x3022, 0x302A, 0x3040] 5-2
5.3 SCCB control [0x3100 - 0x3108] 5-6
5.4 sync control [0x4500 - 0x450A] 5-8
5.5 sensor control [0x3700 - 0x37DF] 5-9
5.6 PSRAM control [0x3F00 - 0x3F07] 5-9
5.7 timing control [0x3800 - 0x3827, 0x3830 - 0x3831] 5-9
5.8 analog [0x3600 - 0x36F2] 5-12
5.9 power control registers [0x3C80 - 0x3C8A, 0x3C8C - 0x3C8D] 5-12
5.10 group hold [0x3200 - 0x3208, 0x320C] 5-13
5.11 ASRAM test [0x3300 - 0x3318] 5-14
5.12 MEC/MGC control [0x3500 - 0x3503, 0x3505, 0x3507 - 0x3512] 5-14
5.13 OTP control [0x3D80 - 0x3D8B, 0x3D8E - 0x3D91] 5-17
5.14 BIST control [0x3E00 - 03E13] 5-18
5.15 clip control [0x4300 - 0x4302] 5-19
5.16 MIPI control [0x4800 - 0x4839, 0x483C - 0x483D, 0x4848 - 0x484F] 5-20
5.17 ISPFC [0x4900 - 0x4903] 5-27
5.18 BLC [0x4000 - 0x4017, 0x4030 - 0x403F, 0x404C - 0x404E, 0x4060 - 0x406F] 5-28
5.19 ISP control [0x5000 - 0x5030] 5-31
5.20 DPC long exposure control [0x5780 - 0x57B2] 5-32
5.21 DPC short exposure control [0x5800 - 0x5815, 0x582C - 0x5832] 5-34
5.22 OTP control [0x5B0D - 0x5B10 - 0x5B17, 0x5B23] 5-36
6 operating specifications **6-1**
6.1 absolute maximum ratings 6-1
6.2 functional temperature 6-1
6.3 DC characteristics 6-2
6.4 timing characteristics 6-3

Confidential for Sida

7 mechanical specifications **7-1**
7.1 COB physical specifications 7-1
7.2 reconstructed wafer (RW) physical specifications 7-4
8 optical specifications **8-1**
8.1 sensor array center 8-1
8.2 lens chief ray angle (CRA) 8-2
appendix A handling of RW devices **A-1**
A.1 ESD /EOS prevention A-1
A.2 particles and cleanliness of environment A-1
A.3 other requirements A-1

Confidential for Sida

Confidential for Sida

list of figures

figure 1-1	pad diagram	1-3
figure 2-1	OV5695 block diagram	2-2
figure 2-2	OV5695 reference schematic	2-3
figure 2-3	power up sequence	2-6
figure 2-4	software standby sequence	2-8
figure 2-5	power down sequence (case 1)	2-9
figure 2-6	PLL1 diagram	2-11
figure 2-7	PLL2 diagram	2-11
figure 2-8	message type	2-13
figure 2-9	SCCB single read from random location	2-14
figure 2-10	SCCB single read from current location	2-14
figure 2-11	SCCB sequential read from random location	2-15
figure 2-12	SCCB sequential read from current location	2-15
figure 2-13	SCCB single write to random location	2-16
figure 2-14	SCCB sequential write to random location	2-16
figure 2-15	SCCB interface timing	2-17
figure 3-1	sensor array region color filter layout	3-1
figure 3-2	example of 2x2 binning	3-2
figure 3-3	alternate row HDR	3-3
figure 3-4	HDR output timing	3-3
figure 4-1	mirror and flip samples	4-1
figure 4-2	image windowing	4-2
figure 4-3	color bar	4-4
figure 7-1	COB die specifications	7-1
figure 7-2	OV5695 RW physical diagram	7-5
figure 8-1	sensor array center	8-1
figure 8-2	chief ray angle (CRA)	8-2

Confidential for sida

Confidential for Sida

list of tables

table 1-1 signal descriptions 1-1
table 1-2 configuration under various conditions 1-2
table 1-3 pad symbol and equivalent circuit 1-4
table 2-1 format and frame rate 2-4
table 2-2 I/O control registers 2-4
table 2-3 power up sequence 2-5
table 2-4 power up sequence timing constraints 2-5
table 2-5 power down sequence 2-7
table 2-6 power down sequence timing constraints 2-7
table 2-7 hardware and standby description 2-10
table 2-8 PLL registers 2-12
table 2-9 SCCB interface timing specifications 2-17
table 2-10 context switching control 2-18
table 3-1 binning-related registers 3-2
table 3-2 HDR control registers 3-3
table 4-1 mirror and flip registers 4-1
table 4-2 image windowing control functions 4-3
table 4-3 test pattern register 4-4
table 4-4 BLC control registers 4-5
table 5-1 PLL control registers 5-1
table 5-2 system control registers 5-2
table 5-3 SCCB registers 5-6
table 5-4 sync control registers 5-8
table 5-5 sensor control registers 5-9
table 5-6 PSRAM control registers 5-9
table 5-7 timing control registers 5-9
table 5-8 analog control registers 5-12
table 5-9 power control registers 5-12
table 5-10 group hold registers 5-13
table 5-11 ASRAM test registers 5-14
table 5-12 MEC/MGC control registers 5-14
table 5-13 OTP control registers 5-17

Confidential for Sina

table 5-14 BIST control registers 5-18
table 5-15 clip control registers 5-19
table 5-16 MIPI control registers 5-20
table 5-17 ISPFC control registers 5-27
table 5-18 BLC control registers 5-28
table 5-19 ISP control registers 5-31
table 5-20 DPC long exposure control registers 5-32
table 5-21 DPC short exposure control registers 5-34
table 5-22 OTP control registers 5-36
table 6-1 absolute maximum ratings 6-1
table 6-2 functional temperature 6-1
table 6-3 DC characteristics (-30°C < TJ < 70°C) 6-2
table 6-4 timing characteristics 6-3
table 7-1 pad location coordinates 7-2
table 7-2 RW physical dimensions 7-4
table 8-1 CRA versus image height plot 8-2

Confidential for Sida

1 signal descriptions

table 1-1 lists the signal descriptions and their corresponding pad numbers for the OV5695 image sensor. The die information is shown in **section 7**.

table 1-1 signal descriptions (sheet 1 of 2)

pad number	signal name	pad type	description
1	DVDD	power	power for digital circuit
2	DVDD	power	power for digital circuit
3	DOGND	ground	ground for I/O circuit
4	DOGND	ground	ground for I/O circuit
5	AGND	ground	ground for analog circuit
6	AVDD	power	power for analog circuit
7	DVDD	power	power for digital circuit
8	**SDA**	I/O	SCCB data
9	**SCL**	input	SCCB input clock
10	**FSIN/VSYNC**	I/O	frame sync input/video output vertical signal
11	DOGND	ground	ground for I/O circuit
12	**XSHUTDN**	input	reset and power down (active low)
13	**SID**	input	SCCB address selection 0: SCCB address is 0x6C 1: SCCB address is 0x20
14	DOVDD	power	power for I/O circuit
15	DVDD	power	power for digital circuit
16	**TM**	input	test mode (active high with internal pull down resistor)
17	VN	reference	internal analog reference
18	DVDD	power	power for digital circuit
19	DOGND	ground	ground for I/O circuit
20	AVDD	power	power for analog circuit
21	AGND	ground	ground for analog circuit
22	AGND	ground	ground for analog circuit
23	AVDD	power	power for analog circuit
24	DOGND	ground	ground for I/O circuit

Confidential for Sida

table 1-1 signal descriptions (sheet 2 of 2)

pad number	signal name	pad type	description
25	VH	reference	internal analog reference
26	DOVDD	power	power for I/O circuit
27	**XVCLK**	input	system input clock / scan clock input
28	DOGND	ground	ground for I/O circuit
29	**MDP0**	I/O	MIPI TX data lane 0 positive output
30	**MDN0**	I/O	MIPI TX data lane 0 negative output
31	EVDD	power	power for MIPI TX circuit
32	DOGND	ground	ground for I/O circuit
33	**MCP**	I/O	MIPI TX clock lane positive output
34	**MCN**	I/O	MIPI TX clock lane negative output
35	**MDP1**	I/O	MIPI TX data lane 1 positive output
36	**MDN1**	I/O	MIPI TX data lane 1 negative output
37	DOGND	ground	ground for I/O circuit
38	DOGND	ground	ground for I/O circuit
39	DVDD	power	power for digital circuit
40	DVDD	power	power for digital circuit

table 1-2 configuration under various conditions (sheet 1 of 2)

pad	signal name	RESET[a]	after RESET release[b]	software standby[c]
8	SDA	open drain	I/O	I/O
9	SCL	high-z	input	input
10	FSIN/VSYNC	high-z	input	input (configurable)
12	XSHUTDN	input	input	input
13	SID	input	input	input
16	TM	input	input	input
27	XVCLK	high-z	input	input
29	MDP0	high-z	high	high by default (configurable)

Confidential for Sida

table 1-2 configuration under various conditions (sheet 2 of 2)

pad	signal name	RESET[a]	after RESET release[b]	software standby[c]
30	MDN0	high-z	high	high by default (configurable)
33	MCP	high-z	high	high by default (configurable)
34	MCN	high-z	high	high by default (configurable)
35	MDP1	high-z	high	high by default (configurable)
36	MDN1	high-z	high	high by default (configurable)

a. XSHUTDN = 0

b. XSHUTDN from 0 to 1

c. sensor set to sleep from streaming mode

figure 1-1 pad diagram

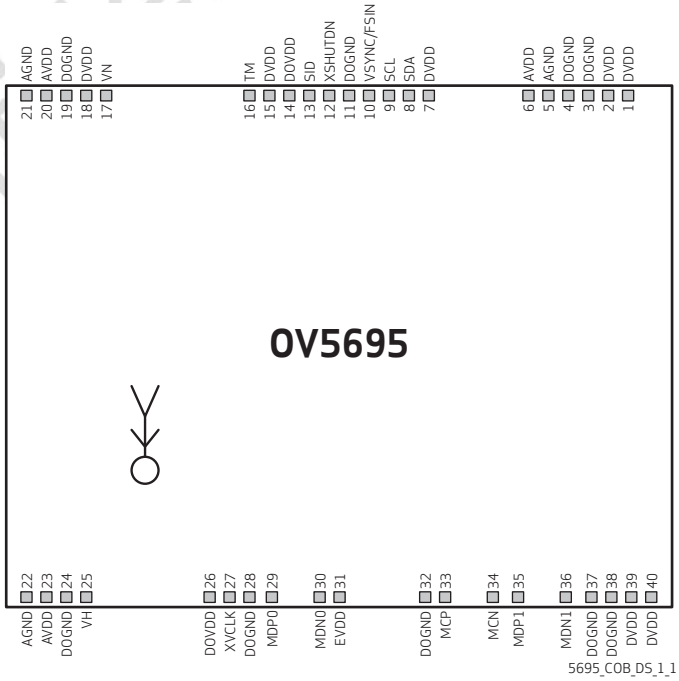

Confidential for Sida

table 1-3 pad symbol and equivalent circuit

symbol	equivalent circuit
XVCLK, SID	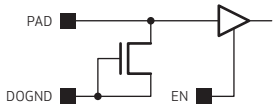
SDA	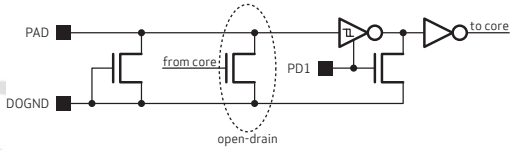
SCL	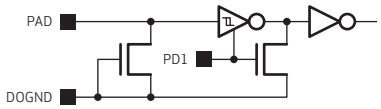
FSIN/VSYNC	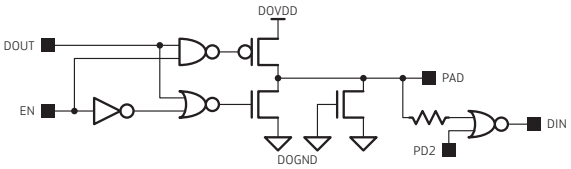
VN	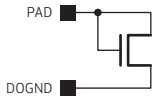
MDP1, MDP0, VH, MDN1, MDN0, MCP, MCN, AGND, DOGND	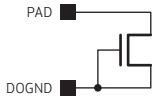
AVDD, EVDD, DVDD, DOVDD	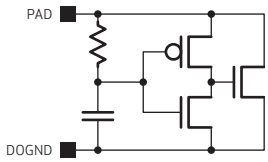
XSHUTDN, TM	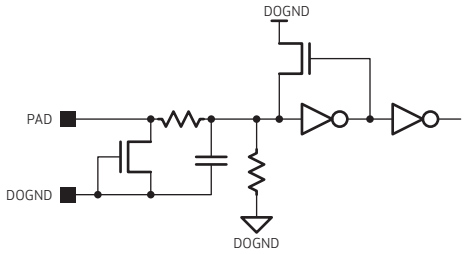

Confidential fc Sida

2 system level description

2.1 overview

The OV5695 RAW RGB image sensor is a high performance, 1/4-inch 5 megapixel CMOS image sensor that delivers 2592x1944 at 30 fps using OmniBSI+™ technology. It provides full-frame, sub-sampled, and windowed 10-bit MIPI images in various formats via the control of the Serial Camera Control Bus (SCCB) interface.

The OV5695 has a 5 megapixel ima ge array capable of operating at up to 30 frames per second (fps) in 10-bit resolution with complete user control over image quality, formatting and output data transfer. Some image processing functions, such as defective pixel canceling, etc., are programmable through the SCCB interface.

In addition, OmniVision image sensors use proprietary sensor technology to improve image quality by reducing or eliminating common lighting/electrical sources of image contamination, such as fixed pattern noise, smearing, etc., to produce a clean, fully stable, color image.

For customized information purposes, the OV5695 includes 1k bits (128 bytes) of one-time programmable (OTP) memory (120 bytes are reserved for OmniVision and 8 bytes are reserved for customers). The OV5695 has a MIPI interface of up to two lanes.

2.2 architecture

The OV5695 sensor core generates streaming pixel data at a constant frame rate. **figure 2-1** shows the functional block diagram of the OV5695 image sensor.

The timing generator outputs clocks to access the rows of the imaging array, pre-charging and sampling the rows of the array sequentially. In the time between pre-charging and sampling a row, the charge in the pixels decreases with exposure to incident light. This is the exposure time in rolling shutter architecture.

The exposure time is controlled by adjusting the time interval between pre-charging and sampling. After the data of the pixels in the row has been sampled, it is processed through analog circuitry to correct the offset and multiply the data with corresponding gain. Following analog processing is the ADC which outputs up to 10-bit data for each pixel in the array.

Confidential for Sida

figure 2-1 OV5695 block diagram

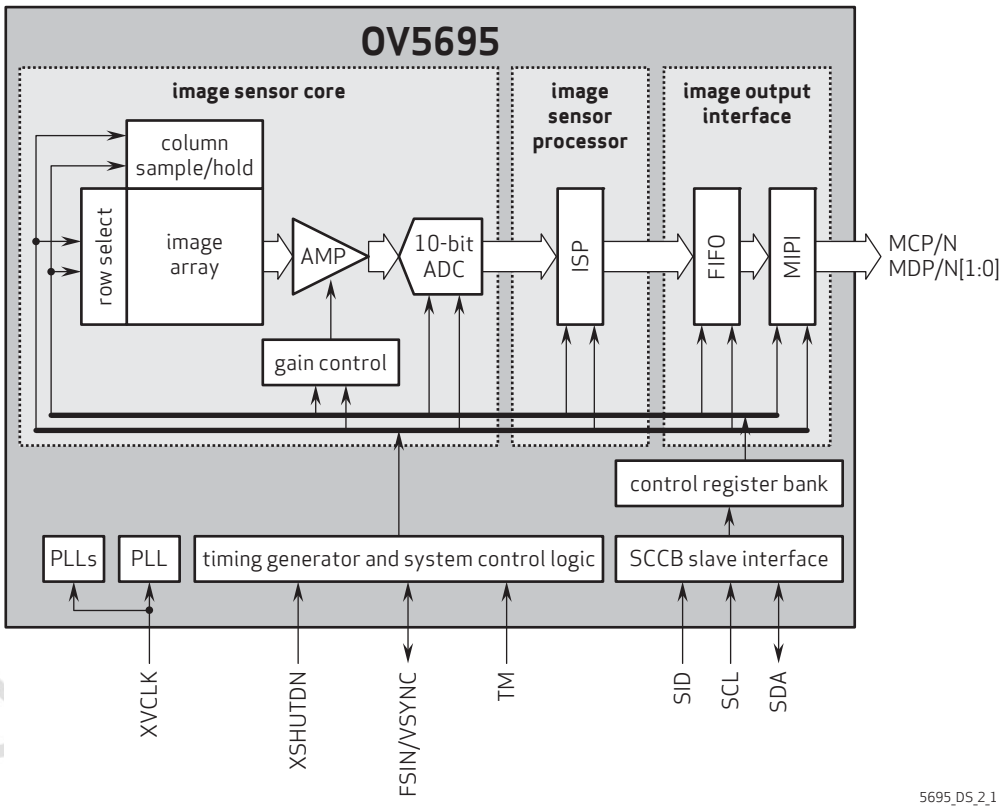

Confid
Sida

figure 2-2 OV5695 reference schematic

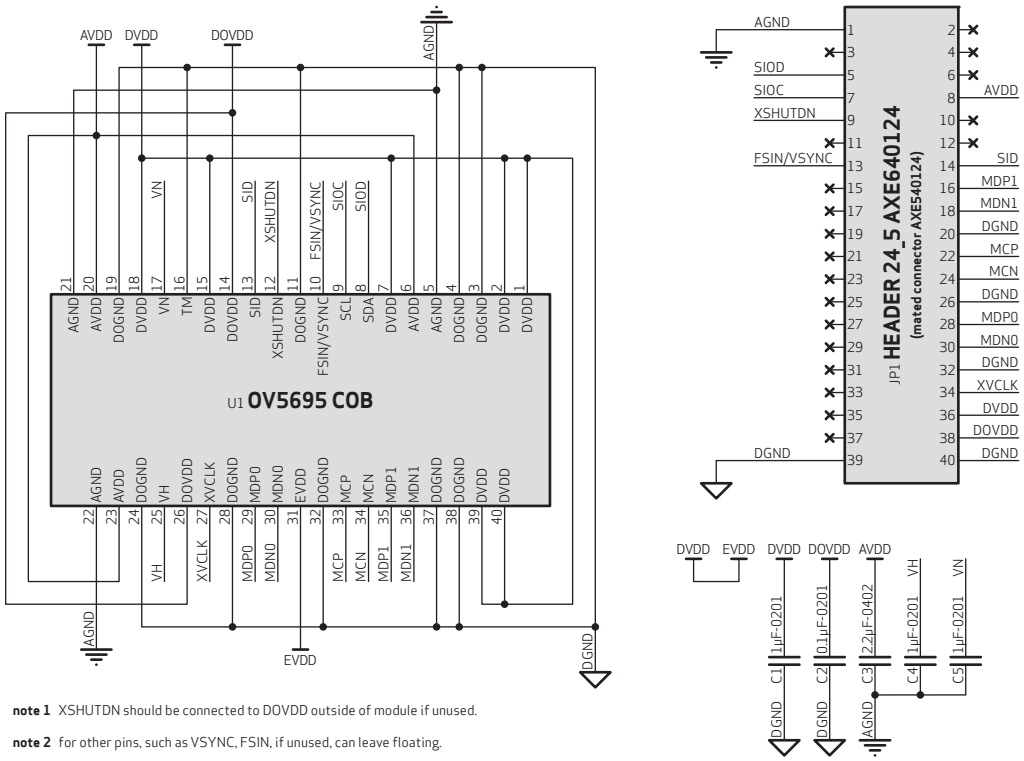

note 1 XSHUTDN should be connected to DOVDD outside of module if unused.

note 2 for other pins, such as VSYNC, FSIN, if unused, can leave floating.

note 3 AVDD is 2.8V of sensor analog power (clean).
for better performance, place a 10 µF or bigger cap for AVDD LDO, and place a 2.2 µF or bigger cap for AVDD pin (C3) inside module or very close to sensor.

note 4 DOVDD is 1.8V of sensor digital IO power (clean).

note 5 DVDD is 1.2V of sensor digital power, and need to provide externally.

note 6 sensor AGND and DGND should be separated and connected to a single point outside PCB (do not be connected inside module).

note 7 capacitors should be close to their related sensor pins.

note 8 traces of MCP, MCN, MDPx, and MDNx should have the same or similar length.
differential impedance of the clock pair and data pair transmission line should be controlled at 100 Ohm.

note 9 SID pin should be pulled low for device address 0x6C and pulled high for device address 0x20.

note 10 all NC pins can be left floating or connected to GND if needed.

5695_COB_DS_2_2

2.3 format and frame

The OV5695 supports RAW RGB output with one/two lane MIPI interface.

table 2-1 format and frame rate

format	resolution	frame rate	methodology	10-bit output MIPI data rate
5 Mpixel	2592x1944	30 fps	full resolution (4:3)	2 lane @ 1000 Mbps/lane
quad HD	2560x1440	30 fps	full resolution (16:9)	2 lane @ 1000 Mbps/lane
1080p	1920 x 1080	60 fps	cropping	2 lane @ 1000 Mbps/lane
720p	1280 x 720	60 fps	cropping + 2x binning	2 lane @ 1000 Mbps/lane
VGA	640 x 480	120 fps	cropping + 4x binning	2 lane @ 1000 Mbps/lane

2.4 I/O control

The OV5695 can configure its I/O pads as an input or output. For the output signal, it follows one of two paths: either from the data path or from register control.

table 2-2 I/O control registers

function	register	description
output drive capability control	0x3011	Bit[6:5]: I/O pad drive capability 00: 1x 01: 2x 10: 3x 11: 4x
FSIN/VSYNC I/O control	0x3002	Bit[7]: FSIN/VSYNC output enable 0: input 1: output
FSIN/VSYNC output select	0x3010	Bit[7]: enable FSIN/VSYNC as GPIO controlled by register
FSIN/VSYNC output value	0x3008	Bit[7]: register control FSIN/VSYNC output

2.5 MIPI interface

The OV5695 supports a MIPI interface of up to 2-lanes. The MIPI interface can be configured for 1/2-lane and each lane is capable of a data transfer rate of up to 1000 Mbps.

Confidential for Sida

2.6 power management

Based on the system power configuration (XSHUTDN control), the power up sequence will be different. OmniVision recommends cutting off all power supplies, including the external DVDD, when the sensor is not in use.

2.6.1 power up sequence

To avoid any glitch from a strong external noise source, OmniVision recommends controlling XSHUTDN by GPIO.

Whether or not XSHUTDN is controlled by GPIO, the XSHUTDN rising cannot occur before AVDD and DOVDD.

table 2-3 power up sequence

XSHUTDN	power up sequence requirement
GPIO	Refer to **figure 2-3** 1. DOVDD rising must occur before DVDD rising 2. AVDD rising can occur before or after DOVDD rising 3. AVDD must occur before DVDD 4. XSHUTDN rising must occur after AVDD, DOVDD and DVDD are stable

table 2-4 power up sequence timing constraints

constraint	label	min	max	unit
AVDD rising – DOVDD rising	t0	0	∞	ns
DOVDD rising – AVDD rising	t1			ns
XSHUTDN rising – first SCCB transaction	t2	8192		XVCLK cycles
minimum number of XVCLK cycles prior to the first SCCB transaction	t3	8192		XVCLK cycles
PLL start up/lock time	t4		0.2	ms
entering streaming mode – first frame start sequence (fixed part)	t5		10	ms
entering streaming mode – first frame start sequence (variable part)	t6	delay is the exposure time value		lines
AVDD or DOVDD, whichever is last – DVDD	t7	0	∞	ns
DVDD – XSHUTDN rising	t9	0	∞	ns

Confidential for

figure 2-3 power up sequence

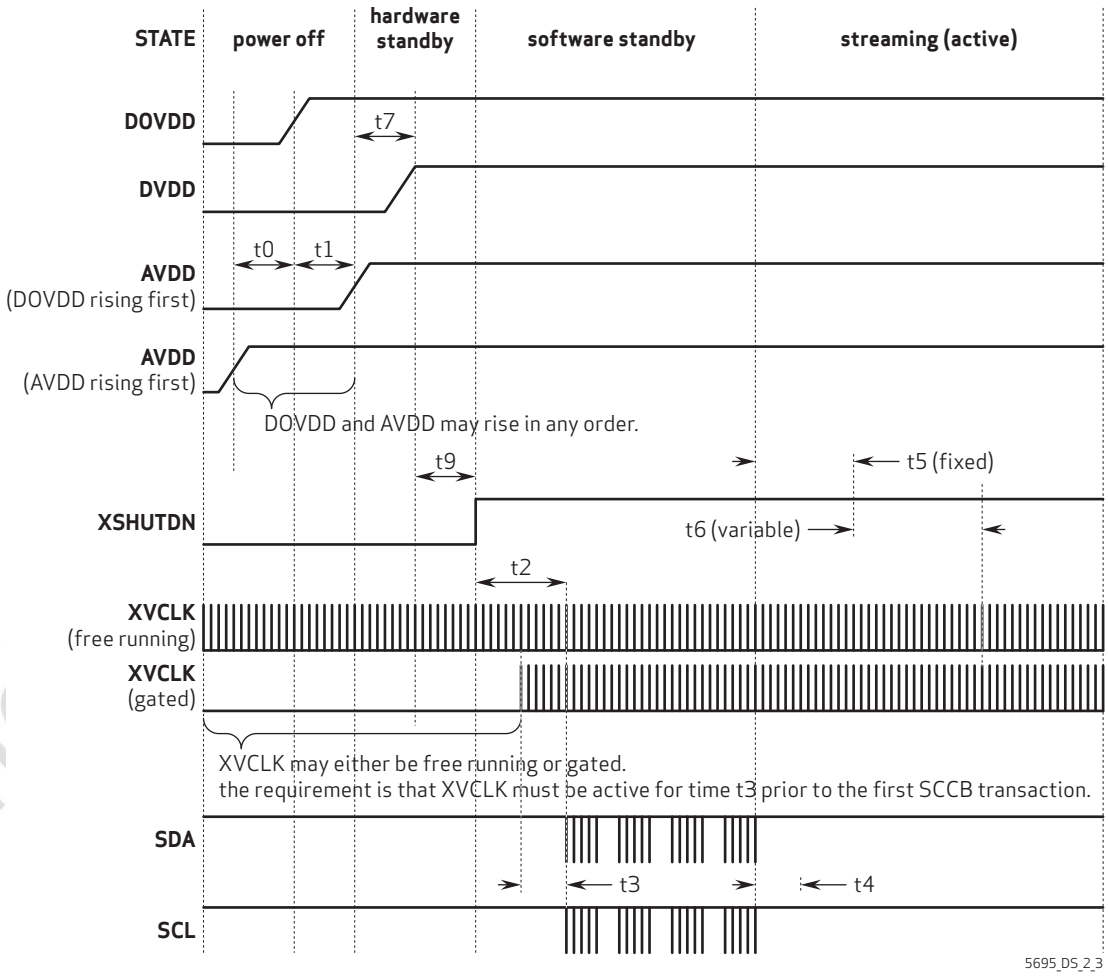

Confi
Sida

2.6.2 power down sequence

The digital and analog supply voltages can be powered down in any order (e.g., DOVDD, then AVDD or AVDD, then DOVDD). Similar to the power up sequence, the XVCLK input clock may be either gated or continuous. To avoid bad frames from the MIPI, OmniVision recommends to using group hold to send SCCB sleep command.

table 2-5 power down sequence

XSHUTDN	power down sequence requirement
GPIO	Refer to **figure 2-5** 1. software standby recommended 2. pull XSHUTDN low for minimum power consumption 3. cut off DVDD 4. pull AVDD and DOVDD low in any order

table 2-6 power down sequence timing constraints

constraint	label	min	max	unit
enter software standby SCCB command device in software standby mode	t0	when a frame of MIPI data is output, wait for the MIPI end code before entering the software for standby; otherwise, enter the software standby mode immediately		
minimum of XVCLK cycles after the last SCCB transaction or MIPI frame end	t1	512		XVCLK cycles
last SCCB transaction or MIPI frame end, XSHUTDN falling	t2	512		XVCLK cycles
XSHUTDN falling – AVDD falling or DOVDD falling whichever is first	t3	0.0		ns
AVDD falling – DOVDD falling	t4	AVDD and DOVDD may fall in any order, the falling separation can vary from 0 ns to infinity		ns
DOVDD falling – AVDD falling	t5			ns
XSHUTDN falling – DVDD falling	t7	0.0		ns
DVDD falling – AVDD falling or DOVDD falling whichever is first	t8	0.0		ns

Confidential for Sicta

figure 2-4 software standby sequence

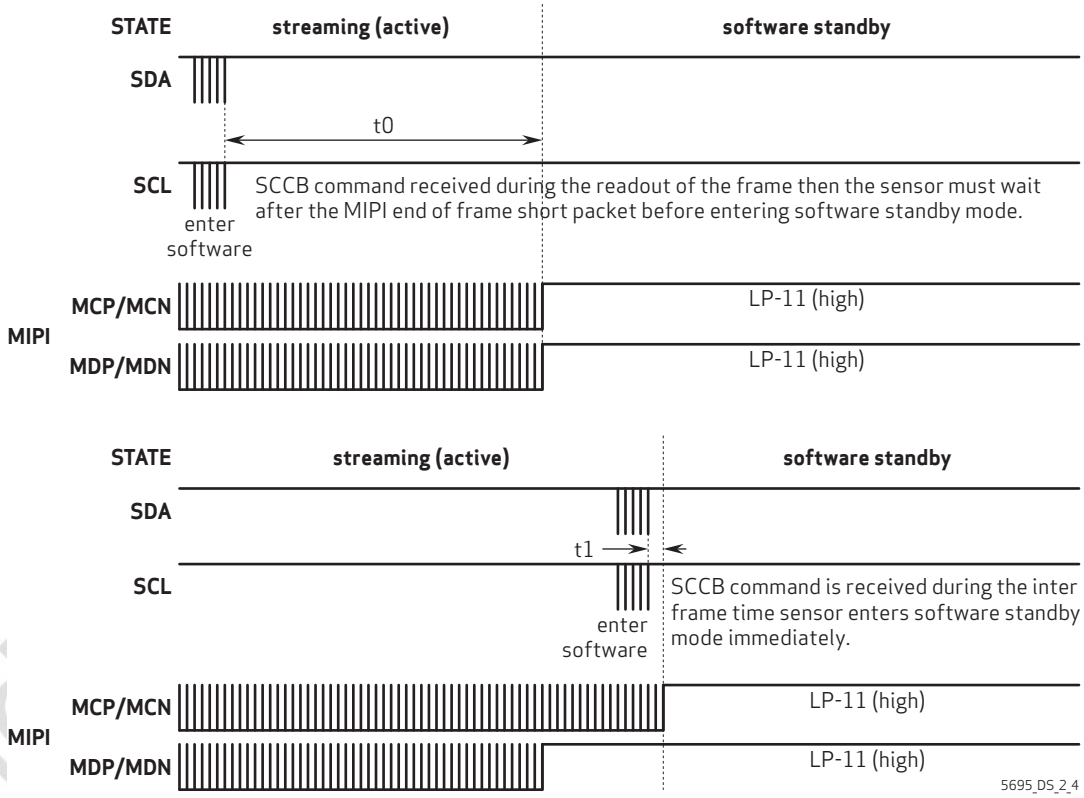

Confi
Sida

figure 2-5 power down sequence (case 1)

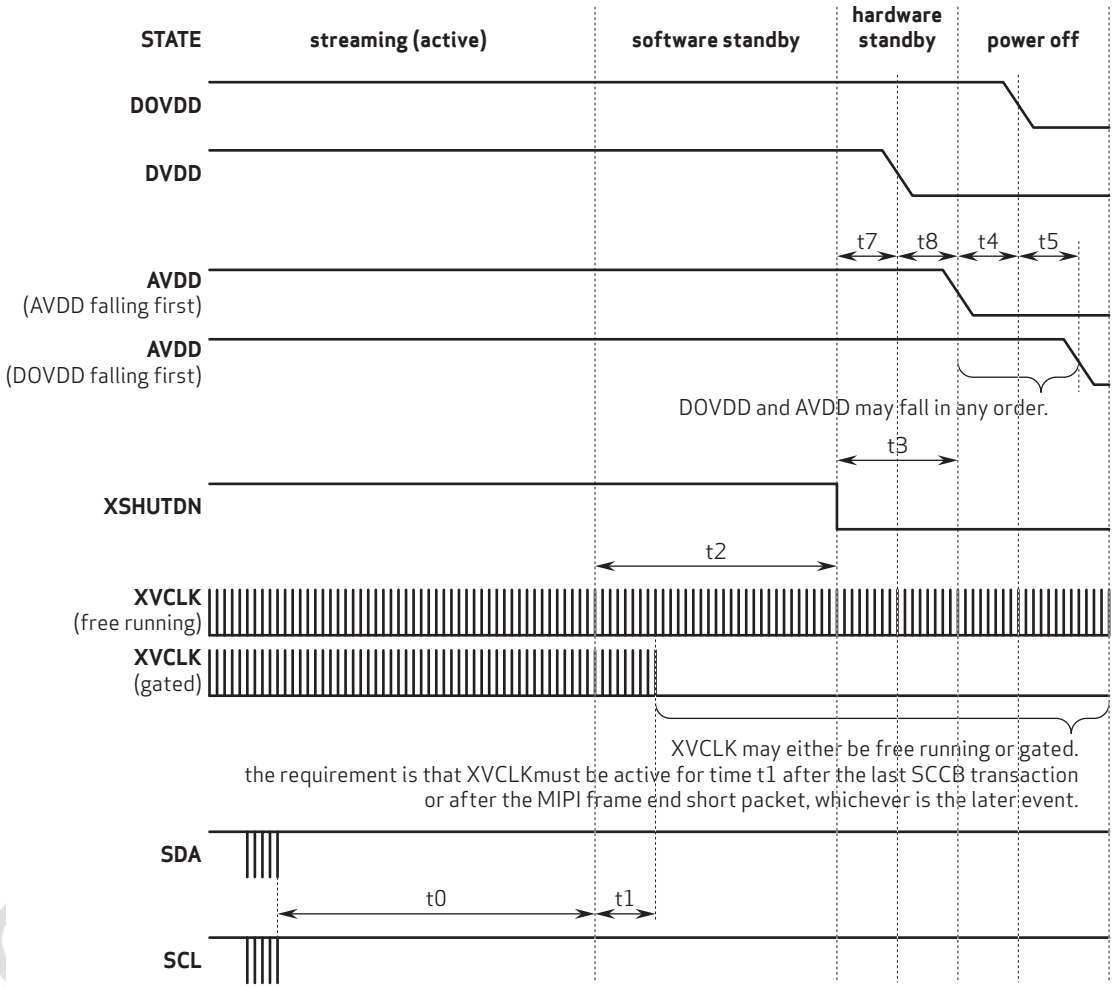

2.7 reset

The whole chip will be reset during power up. Manually applying a hardware reset (XSHUTDN=0) upon power up is recommended even though the on-chip power up reset is included. The hardware reset is active low with an asynchronized design. The reset pulse width should be greater than or equal to 2 ms.

2.7.1 power ON reset

The power on reset can be controlled from an external pin. Additionally, in this sensor, a power on reset is generated after the core power becomes stable.

2.7.2 software reset

When register 0x0103[0] is configured as 1, all registers are reset to default value.

2.8 hardware and software standby

Two suspend modes are available for the OV5695:

- hardware standby
- software standby

2.8.1 hardware standby

To initiate hardware standby mode, the XSHUTDN pin must be tied to low. When this occurs, the OV5695 internal device clock is halted even when the external clock source is still clocking and all internal counters are reset. When resumed from hardware standby, XSHUTDN resets all registers to the default value.

2.8.2 software standby

Executing a software power down (0x0100[0]) through the SCCB interface suspends internal circuit activity, but does not halt the device clock. All register content is maintained in standby mode. During the resume state, all the registers are restored to their original values.

Confidential for Sida

table 2-7 hardware and standby description

mode	description
hardware standby	1. enabled by pulling XSHUTDN low 2. power down all blocks 3. register values are reset to default values 4. no SCCB communication 5. minimum power consumption
software standby	1. default mode after power on reset 2. power down all blocks except SCCB 3. register values are maintained 4. SCCB communication is available 5. low power consumption 6. GPIO can be configured as high/low/tri-state

2.9 system clock control

PLL settings can only be changed during sensor standby mode (0x0100 = 0).

2.9.1 PLL1

The PLL1 generates a default 125 MHz pixel clock and 1000 MHz MIPI serial clock from a 6~27 MHz input clock. The VCO range is from 500 MHz to 1000 MHz. A programmable clock is provided to generate different frequencies.

figure 2-6 PLL1 diagram

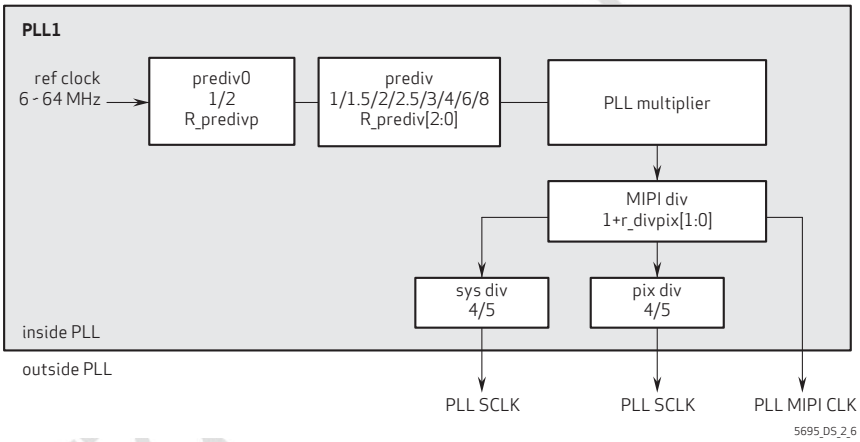

2.9.2 PLL2

The PLL2 generates a default 45 MHz system clock from a 6~27 MHz input clock. The VCO range is from 500 MHz to 1000 MHz. A programmable clock divider is provided to generate different frequencies.

figure 2-7 PLL2 diagram

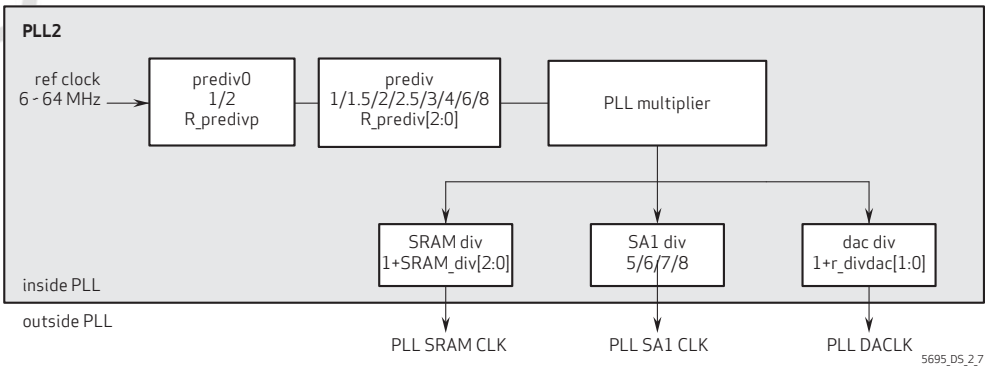

table 2-8 PLL registers

address	register name	default value	R/W	description
0x0300	PLL_00	0x04	RW	Bit[2:0]: pll1_pre_div
0x0301	PLL_01	0x00	RW	Bit[1:0]: pll1_multiplier[9:8]
0x0302	PLL_02	0x7D	RW	Bit[7:0]: pll1_multiplier[7:0]
0x0303	PLL_03	0x00	RW	Bit[1:0]: pll1_divpix
0x0304	PLL_04	0x00	RW	Bit[0]: pll1_pix_bitdiv
0x0305	PLL_05	0x01	RW	Bit[0]: pll1_sys_bitdiv
0x0306	PLL_06	0x01	RW	Bit[0]: rsvd_pll6_0
0x0307	PLL_07	0x00	RW	Bit[0]: pll1_predivp
0x0308	PLL_08	0x00	RW	Bit[0]: pll1_byp
0x0309	PLL_09	0x01	RW	Bit[2:0]: pll1_cp
0x030A	PLL_0A	0xAA	RW	Bit[7:0]: pll1_rsvd_0a
0x030B	PLL_0B	0x00	RW	Bit[0]: pll2_pre_div
0x030C	PLL_0C	0x00	RW	Bit[1:0]: pll2_mult[9:8]
0x030D	PLL_0D	0x1E	RW	Bit[7:0]: pll2_mult[7:0]
0x030E	PLL_0E	0x05	RW	Bit[2:0]: pll2_sramdiv
0x030F	PLL_0F	0x03	RW	Bit[1:0]: pll2_sa1div
0x0310	PLL_10	0x01	RW	Bit[2:0]: pll2_r_cp
0x0311	PLL_11	0x00	RW	Bit[0]: pll2_byp
0x0312	PLL_12	0x01	RW	Bit[5]: pll2_div_rst_sync Bit[4]: pll2_predivp Bit[1:0]: pll2_r_divdac
0x0313	PLL_13	0x00	RW	Bit[7:0]: pll2_rsvd
0x031B	PLL_1B	0x00	RW	Bit[0]: pll1_rst
0x031C	PLL_1C	0x00	RW	Bit[0]: pll2_rst
0x031E	PLL_1E	0x04	RW	Bit[3]: pll1_no_lat

Confidential for Sida

2.10 serial camera control bus (SCCB) interface

The Serial Camera Control Bus (SCCB) interface controls the image sensor operation. Refer to the *OmniVision Technologies Serial Camera Control Bus (SCCB) Specification* for detailed usage of the serial control port.

In the OV5695, the SCCB ID is controlled by the SID pin. If SID is low, the sensor's SCCB ID is 0x6C. If SID is high, the sensor's SCCB ID is 0x20. The SCCB ID can also be programmed by registers. When 0x303F[0] is 1, the ID comes from register 0x3004 when SID=0 and register 0x3012 when SID=1.

2.10.1 data transfer protocol

The data transfer of the OV5695 follows the SCCB protocol.

2.10.2 message format

The OV5695 supports the message format shown in **figure 2-8**. The repeated START (Sr) condition is not shown in **figure 2-9**, but is shown in **figure 2-10** and **figure 2-11**.

figure 2-8 message type

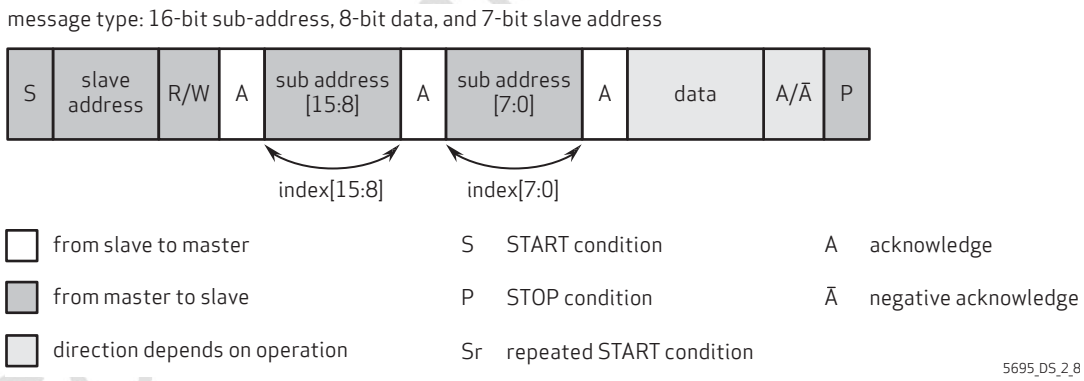

2.10.3 read / write operation

The OV5695 supports four different read operations and two different write operations:

- a single read from random locations
- a sequential read from random locations
- a single read from current location
- a sequential read from current location
- single write to random locations
- sequential write starting from random location

The sub-address in the sensor automatically increases by one after each read/write operation.

In a single read from random locations, the master does a dummy write operation to desired sub-address, issues a repeated start condition and then addresses the camera again with a read operation. After acknowledging its slave address, the camera starts to output data onto the SDA line as shown in **figure 2-9**. The master terminates the read operation by setting a negative acknowledge and stop condition.

figure 2-9 SCCB single read from random location

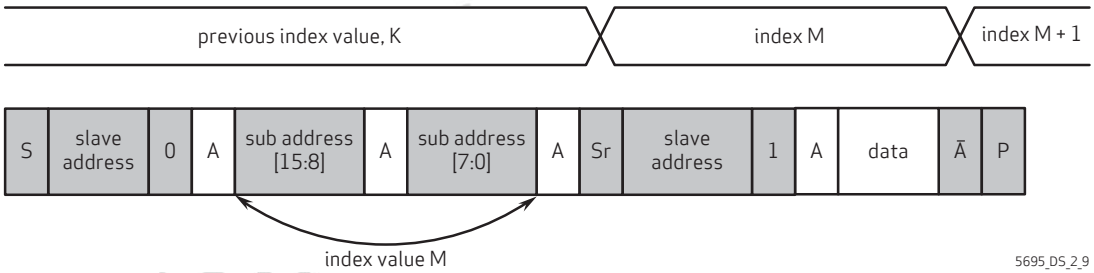

If the host addresses the camera with read operation directly without the dummy write operation, the camera responds by setting the data from last used sub-address to the SDA line as shown in **figure 2-10**. The master terminates the read operation by setting a negative acknowledge and stop condition.

figure 2-10 SCCB single read from current location

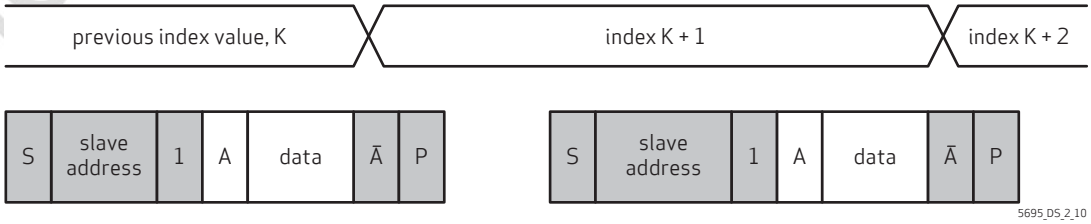

Confidential
Sida

The sequential read from a random location is illustrated in **figure 2-11**. The master does a dummy write to the desired sub-address, issues a repeated start condition after acknowledge from slave and addresses the slave again with read operation. If a master issues an acknowledge after receiving data, it acts as a signal to the slave that the read operation shall continue from the next sub-address. When master has read the last data byte, it issues a negative acknowledge and stop condition.

figure 2-11 SCCB sequential read from random location

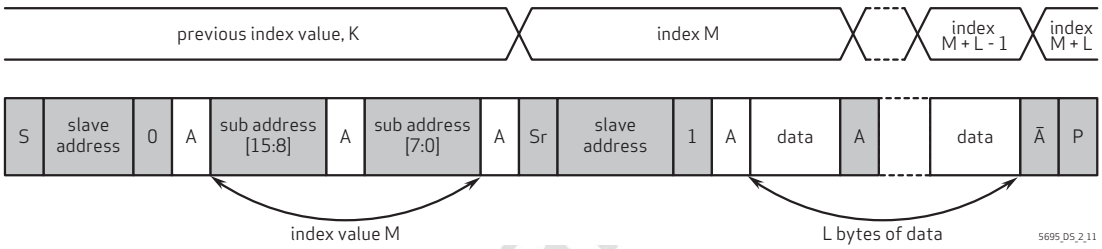

The sequential read from current location is similar to a sequential read from a random location. The only exception is that there is no dummy write operation, as shown in **figure 2-12**. The master terminates the read operation by setting a negative acknowledge and stop condition.

figure 2-12 SCCB sequential read from current location

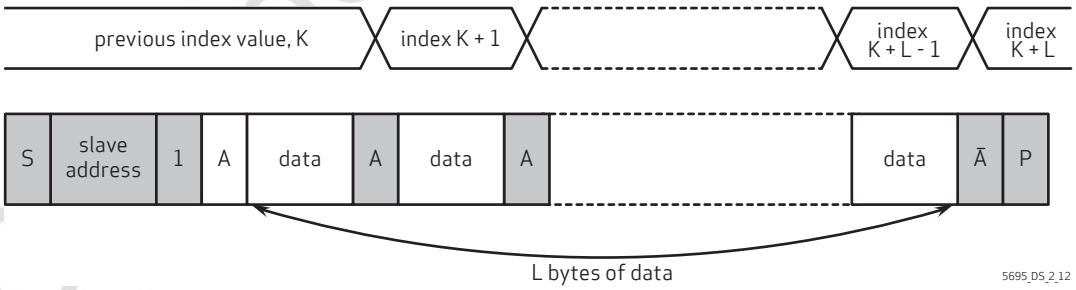

Confidential Sida

The write operation to a random location is illustrated in **figure 2-13**. The master issues a write operation to the slave, sets the sub-address and data correspondingly after the slave has acknowledged. The write operation is terminated with a stop condition from the master.

figure 2-13 SCCB single write to random location

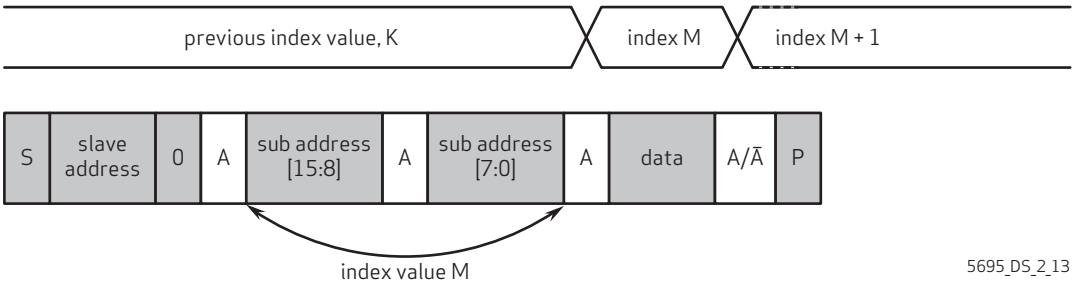

The sequential write is illustrated in **figure 2-14**. The slave automatically increments the sub-address after each data byte. The sequential write operation is terminated with stop condition from the master.

figure 2-14 SCCB sequential write to random location

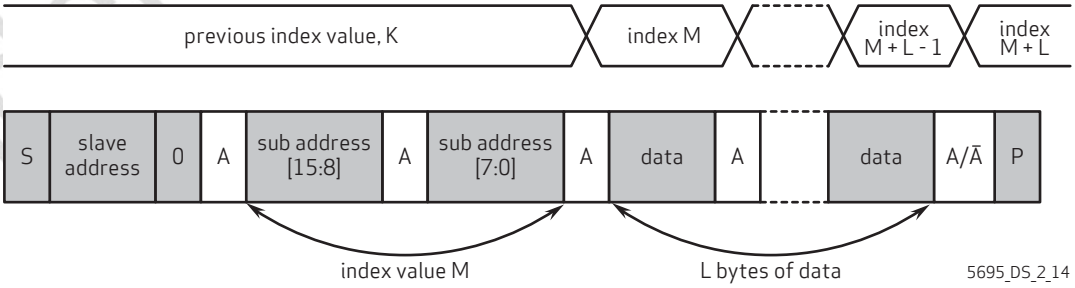

Confidential
Sida

2.10.4 SCCB timing

figure 2-15 SCCB interface timing

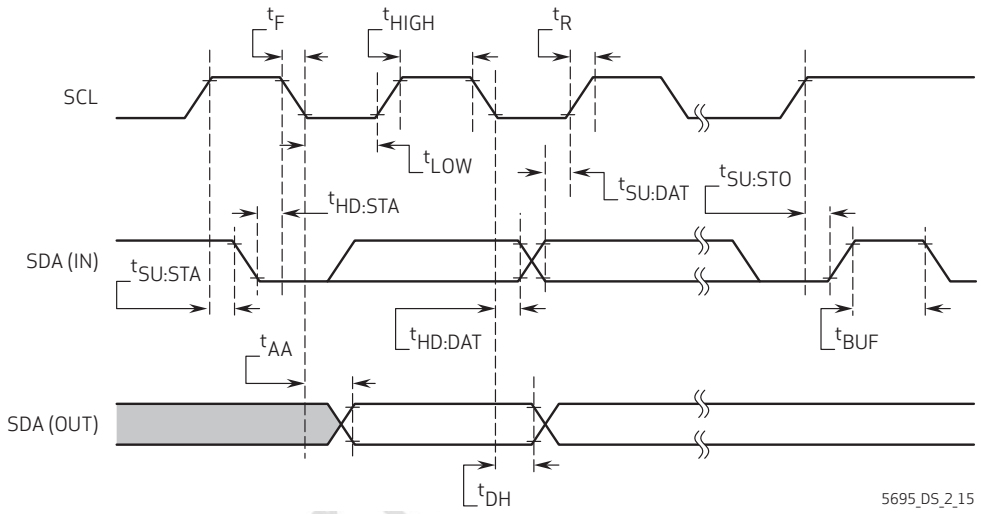

table 2-9 SCCB interface timing specifications[ab]

symbol	parameter	min	typ	max	unit
f_{SCL}	clock frequency			400	kHz
t_{LOW}	clock low period	1.3			µs
t_{HIGH}	clock high period	0.6			µs
t_{AA}	SCL low to data out valid	0.1		0.9	µs
t_{BUF}	bus free time before new start	1.3			µs
$t_{HD:STA}$	start condition hold time	0.6			µs
$t_{SU:STA}$	start condition setup time	0.6			µs
$t_{HD:DAT}$	data in hold time	0			µs
$t_{SU:DAT}$	data in setup time	0.1			µs
$t_{SU:STO}$	stop condition setup time	0.6			µs
t_R, t_F	SCCB rise/fall times			0.3	µs
t_{DH}	data out hold time	0.05			µs

a. SCCB timing is based on 400kHz mode

b. timing measurement shown at the beginning of the rising edge and/or of the falling edge signifies 30%, timing measurement shown in the middle of the rising/falling edge signifies 50%, timing measurement shown at the beginning of the rising edge and/or of the falling edge signifies 70%

Confidential Sida

2.11 group write

Group write is supported in order to update a group of registers (except 0x31xx) in the same frame. These registers are guaranteed to be written prior to the internal latch at the frame boundary. If more than one group is going to be launched, the second group cannot be recorded or launched before the first group has effectively been launched.

The OV5695 supports up to four groups. These groups share 512 bytes of memory and the size of each group is programmable by adjusting the start address.

table 2-10 context switching control

address	register name	default value	R/W	description
0x3208	GROUP ACCESS	–	W	Group Access Bit[7:4]: group_ctrl 0000: Group hold start 0001: Group hold end 1010: Group delay launch 1110: Group quick launch Others: Debug mode Bit[3:0]: Group ID 0000: Group bank 0, default start from address 0x00 0001: Group bank 1, default start from address 0x40 0010: Group bank 2, default start from address 0x80 0011: Group bank 3, default start from address 0xB0 Others: Debug mode

Confidential for Sida

2.11.1 hold

After the groups are configured, users can perform a hold operation to store register settings into the SRAM of each group. The hold of each group starts and ends with the control register 0x3208. The lower 4 bits of register 0x3208 control which group to access, and the upper 4 bits control the start (0x0: hold start) and end (0x1: hold end) of the hold operation.

The example setting below shows the sequence to hold group 0:

```
6C  3208  00    group 0 hold start
6C  3800  11    first register into group 0
6C  3911  22    second register into group 0
6C  3208  10    group 0 hold end
```

2.11.2 launch

After the contents of each group are defined in the hold operation, all registers belonging to each group are stored in SRAM, and ready to be written into target registers (i.e., the launch of that group).

There are two launch modes as described in sections **section 2.11.2.1** and **section 2.11.2.2**.

2.11.2.1 launch mode 1 - quick manual launch

Manual launch is enabled by setting the register 0x320B to 0.

Quick manual launch is achieved by writing to control register 0x3208. The value written into this register is 0xEX, the upper 4 bits (0xE) are the quick launch command and the lower 4 bits (0xX) are the group number. For example, if users want to launch group 0, they just write the value 0xE0 to 0x3208, then the contents of group 0 will be written to the target registers immediately after the sensor gets this command through the SCCB. Below is a setting example.

```
6C  3208  E0    quick launch group 0
```

2.11.2.2 launch mode 2 - delay manual launch

Delay manual launch is achieved by writing to the register 0x3208. The value written into this register is 0xAX, where the upper 4 bits (0xA) are the delay launch command and the lower 4 bits (0xX) are the group number. For example, if users want to launch group 1, they just write the value 0xA1 to 0x3208, then the contents of group 1 will be written to the target registers. The difference with mode 1 is that the writing will wait for some internally defined time spot in vertical blanking, thus delayed. Below is a setting example.

```
6C  3208  A1    delay launch group 1
```

Confidential for Sida

Confidential for Sida

3 block level description

3.1 pixel array structure

The OV5695 sensor has an image array of 2624 columns by 1980 rows (5,195,520 pixels including 20 black lines). figure 3-1 shows a cross-section of the image sensor array.

The color filters are arranged in a Bayer pattern. The primary color BG/GR array is arranged in line-alternating fashion. Of the 5,195,520 pixels, 5,038,848 (2592x1944) are active pixels and can be output.

The sensor array design is based on a field integration readout system with line-by-line transfer and an electronic shutter with a synchronous pixel readout scheme.

figure 3-1 sensor array region color filter layout

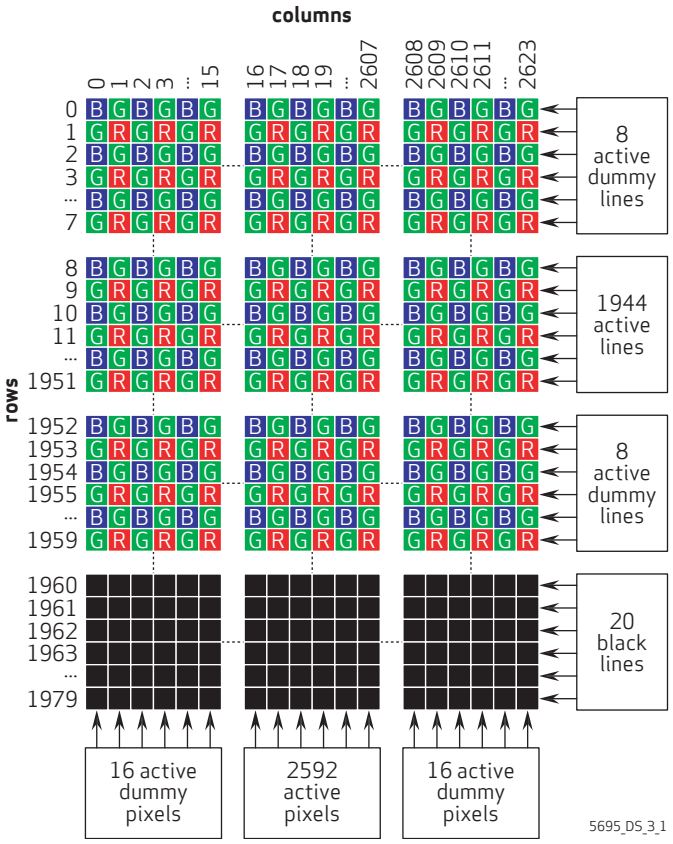

3.2 subsampling

The OV5695 supports a binning mode to provide a lower resolution output while maintaining the field of view. With binning mode ON, the voltage levels of adjacent pixels (of the same color) are averaged before being sent to the ADC. The OV5695 supports 2x2 binning, which is illustrated in **figure 3-2**, where the voltage levels of two horizontal (2x1) adjacent same-color pixels are averaged.

figure 3-2 example of 2x2 binning

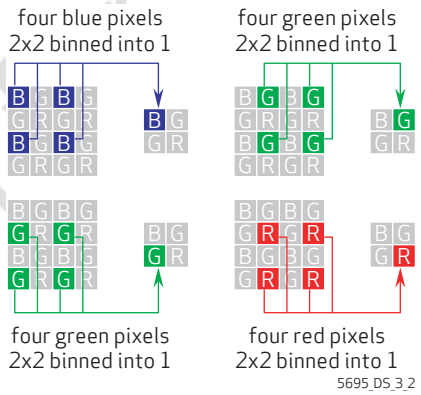

table 3-1 binning-related registers

address	register name	default value	R/W	description
0x3820	TIMING_FORMAT1	0x80	RW	Bit[4]: vbin
0x3821	TIMING_FORMAT2	0x40	RW	Bit[7]: dig_hbin4 Bit[0]: dig_hbin2
0x3814	X_ODD_INC	0x01	RW	Bit[4:0]: Horizontal increase number at odd pixel
0x3815	X_EVEN_INC	0x01	RW	Bit[4:0]: Horizontal increase number at even pixel
0x382A	Y_ODD_INC	0x01	RW	Bit[4:0]: Vertical increase number at odd row
0x382B	Y_EVEN_INC	0x01	RW	Bit[4:0]: Vertical increase number at even row
0x4502	HBIN2_SUM	0x40	RW	Bit[3:2]: When 0x3821[0] dig_hbin2 is enabled, 0x4502[3:2]: 2 = binning sum, 0x4502[3:2]: 1 = binning average
0x450A	HBIN4_SUM	0x00	RW	Bit[1:0]: When 0x3821[7] dig_hbin4 enabled, 0x450A[1:0]: 3 = binning sum, 0x450A[1:0]: 2 = binning average

Confidential Sida

3.3 alternate row HDR

In HDR mode, the exposure is still controlled by a rolling shutter. However, the frame data is separated into "long exposure" and "short exposure" in every two rows, as shown in **figure 3-3**. Long exposure time is controlled by registers 0x3500, 0x3501, and 0x3502. Short exposure time is controlled by registers 0x3506, 0x3507, and 0x3508. The sequence of MIPI output in HDR mode is similar to normal mode. The output timing of long and short exposure lines is shown in **figure 3-4**

figure 3-3 alternate row HDR

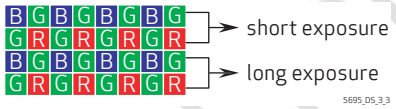

figure 3-4 HDR output timing

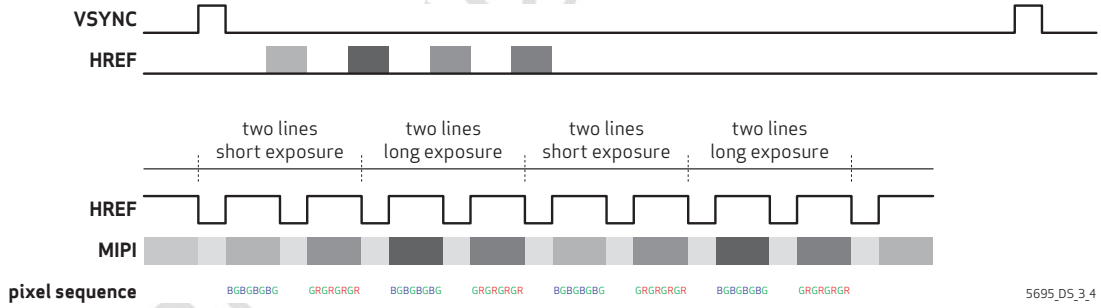

table 3-2 HDR control registers (sheet 1 of 2)

address	register name	default value	R/W	description
0x3820	TIMING_FORMAT	0x80	RW	HDR Enable Bit[0]: hdr_en 0: Disable 1: Enable
0x3500	MEC LONG EXPO	0x00	RW	Long Exposure Bit[3:0]: Long exposure[19:16]
0x3501	MEC LONG EXPO	0x02	RW	Long Exposure Bit[7:0]: Long exposure[15:8]
0x3502	MEC LONG EXPO	0x00	RW	Long Exposure Bit[7:0]: Long exposure[7:0] Low 4 bits are fraction bits

table 3-2 HDR control registers (sheet 2 of 2)

address	register name	default value	R/W	description
0x3503	AEC MANUAL	0x00	RW	Bit[6]: Digital fraction gain delay option 0: Delay 1 frame 1: Do not delay 1 frame Bit[5]: Gain change delay option 0: Delay 1 frame 1: Do not delay 1 frame Bit[4]: Gain delay option 0: Delay 1 frame 1: Do not delay 1 frame Bit[3]: Not used Bit[2]: Gain manual as sensor gain 0: Input gain as real gain format 1: Input gain as sensor gain format Bit[1]: Exposure delay option (must be 0) 0: Delay 1 frame 1: Not used Bit[0]: Exposure change delay option (must be 0) 0: Delay 1 frame 1: Not used
0x3508	LONG GAIN	0x00	RW	Bit[4:0]: Long_gain[12:8]
0x3509	LONG GAIN	0x80	RW	Bit[7:0]: Long gain[7:0] If 0x3503[2]=0, gain[7:0] is real gain format, where low 4 bits are fraction bits, for example, 0x10 is 1x gain, 0x28 is 2.5x gain If 0x3503[2]=1, gain[7:0] is sensor gain format, gain[7:4] is coarse gain, 00000: 1x, 00001: 2x, 00011: 4x, 00111: 8x, gain[7] is 1, gain[3:0] is fine gain. For example, 0x10 is 1x gain, 0x30 is 2x gain, 0x70 is 4x gain
0x350C	SHORT GAIN	0x00	RW	Bit[4:0]: Short gain[12:8]
0x350D	SHORT GAIN	0x80	RW	Bit[7:0]: Short gain[7:0] Use group function to change 0x366A[6:4] with the same rule as long gain
0x3510	MEC SHORT EXPO	0x00	RW	Short Exposure Bit[3:0]: Short exposure[19:16]
0x3511	MEC SHORT EXPO	0x02	RW	Short Exposure Bit[7:0]: Short exposure[15:8]
0x3512	MEC SHORT EXPO	0x00	RW	Short Exposure Bit[7:0]: Short exposure[7:0] Low 4 bits are fraction bits

Confidential for Sida

3.4 analog amplifier

When the column sample/hold circuit has sampled one row of pixels, the pixel data will shift out one-by-one into an analog amplifier.

3.5 10-bit A/D converters

The balanced signal is then digitized by the on-chip 10-bit ADC.

Confidential for Sida

Confidential for Sida

4 image sensor core digital functions

4.1 mirror and flip

The OV5695 provides mirror and flip readout modes, which respectively reverse the sensor data readout order horizontally and vertically (see **figure 4-1**).

figure 4-1 mirror and flip samples

table 4-1 mirror and flip registers

address	register name	default value	R/W	description
0x3820	FORMAT1	0x00	RW	Timing Control Register Bit[5]: vflip_blc Bit[4]: Vertical flip enable 0: Normal 1: Vertical flip Bit[3]: Horiztonal mirror enable 0: Normal 1: Horizontal mirror

Confidential
Sida

4.2 image windowing

An image windowing area is defined by four parameters, horizontal start (HS), horizontal end (HE), vertical start (VS), and vertical end (VE). By properly setting the parameters, any portion within the sensor array size can output as a visible area. Windowing is achieved by masking off the pixels outside of the window; thus, the original timing is not affected.

figure 4-2 image windowing

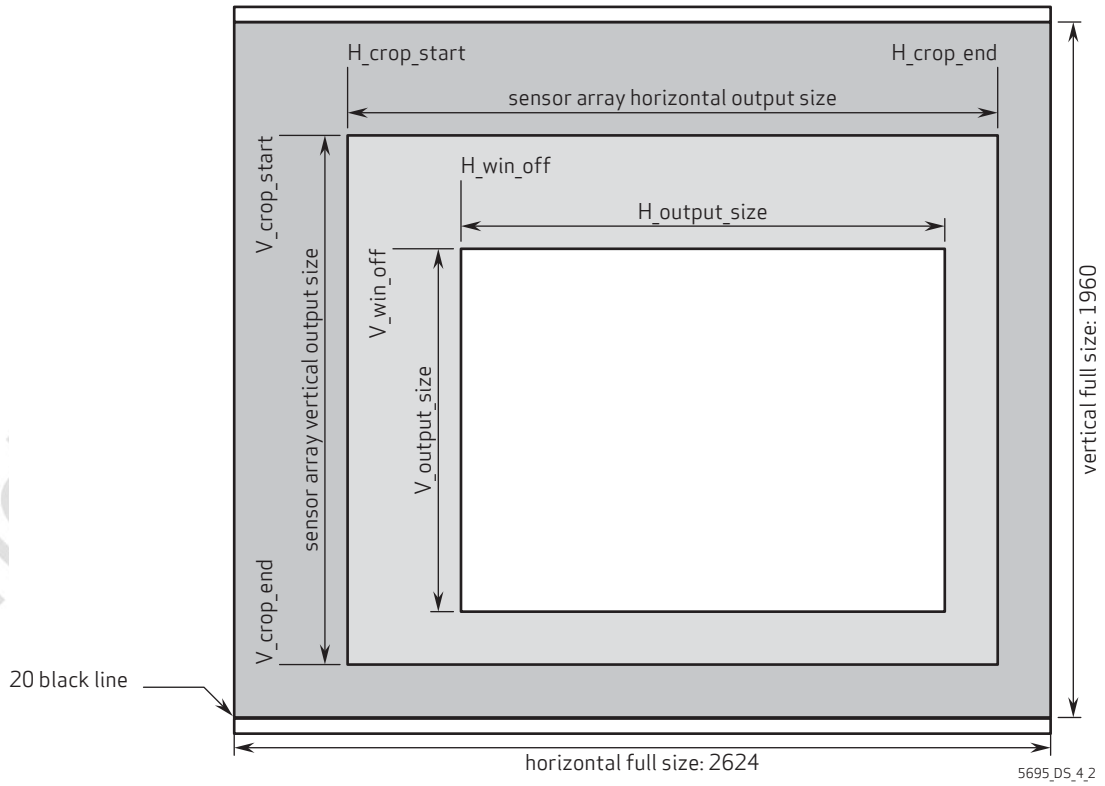

Confi
Sida

table 4-2 image windowing control functions

address	register name	default value	R/W	description
0x3800	TIMING_X_ ADDR_START	0x00	RW	Bit[7:0]: Array horizontal start point[15:8]
0x3801	TIMING_X_ ADDR_START	0x00	RW	Bit[7:0]: Array horizontal start point[7:0]
0x3802	TIMING_Y_ ADDR_START	0x00	RW	Bit[7:0]: Array vertical start point[15:8]
0x3803	TIMING_Y_ ADDR_START	0x04	RW	Bit[7:0]: Array vertical start point[7:0]
0x3804	TIMING_X_ ADDR_END	0x0A	RW	Bit[7:0]: Array horizontal end point[15:8]
0x3805	TIMING_X_ ADDR_END	0x3F	RW	Bit[7:0]: Array horizontal end point[7:0]
0x3806	TIMING_Y_ ADDR_END	0x07	RW	Bit[7:0]: Array vertical end point[15:8]
0x3807	TIMING_Y_ ADDR_END	0xAB	RW	Bit[7:0]: Array vertical end point[7:0]
0x3808	TIMING_X_ OUTPUT_SIZE	0x0A	RW	Bit[7:0]: ISP horizontal output width[15:8]
0x3809	TIMING_X_ OUTPUT_SIZE	0x20	RW	Bit[7:0]: ISP horizontal output width[7:0]
0x380A	TIMING_Y_ OUTPUT_SIZE	0x07	RW	Bit[7:0]: ISP vertical output height[15:8]
0x380B	TIMING_Y_OUTPUT_SIZE	0x98	RW	Bit[7:0]: ISP vertical output height[7:0]
0x380C	TIMING_HTS	0x02	RW	Bit[7:0]: Total horizontal timing size[15:8]
0x380D	TIMING_HTS	0xE4	RW	Bit[7:0]: Total horizontal timing size[7:0]
0x380E	TIMING_VTS	0x07	RW	Bit[7]: Chip debug use only[15] Bit[6:0]: Total vertical timing size[14:8]
0x380F	TIMING_VTS	0xE8	RW	Bit[7:0]: Total vertical timing size[7:0]
0x3810	TIMING_ISP_X_WIN	0x00	RW	Bit[7:0]: ISP horizontal windowing offset[7:0]
0x3811	TIMING_ISP_X_WIN	0x10	RW	Bit[7:0]: ISP horizontal windowing offset[7:0]
0x3812	TIMING_ISP_Y_WIN	0x00	RW	Bit[7:0]: ISP vertical windowing offset[15:8]
0x3813	TIMING_ISP_Y_WIN	0x08	RW	Bit[7:0]: ISP vertical windowing offset[7:0]
0x3814	TIMING_X_INC_ODD	0x01	RW	Bit[4:0]: x_odd_inc
0x3815	TIMING_X_INC_EVEN	0x01	RW	Bit[4:0]: x_even_inc
0x3816	TIMING_Y_INC_ODD	0x01	RW	Bit[4:0]: y_odd_inc
0x3817	TIMING_Y_INC_EVEN	0x01	RW	Bit[4:0]: y_even_inc
0x3818	TIMING_VSYNC_START	0x00	RW	Bit[7:0]: VSYNC start point[7:0]
0x3819	TIMING_VSYNC_START	0x00	RW	Bit[7:0]: VSYNC start point[7:0]
0x381A	TIMING_VSYNC_END	0x00	RW	Bit[7:0]: VSYNC end point[15:8]
0x381B	TIMING_VSYNC_END	0x01	RW	Bit[7:0]: VSYNC end point[7:0

Confidential for Sidar

4.3 test pattern

table 4-3 test pattern register

address	register name	default value	R/W	description
0x4503	SYNC_REG3	0x00	RW	Bit[7]: r_bar_en Bit[1:0]: bar_style

figure 4-3 color bar

5695_DS_4_3

Confidential for Sida

4.4 black level calibration (BLC)

The pixel array contains several optically shielded (black) lines and optically shielded (black) pixels on the right side. These lines and columns are used as reference for black level calibration. The main function of the BLC is to adjust all normal pixel values based on the values of the black levels. Registers 0x4004~0x4009 are defined reference windows for black level calibration, these registers can be adjusted manually through an output window.

Black level adjustments can be made with registers 0x4000, 0x4002, and 0x4003.

table 4-4 BLC control registers (sheet 1 of 2)

address	register name	default value	R/W	description
0x4000	BLC CTRL 00	0x33	RW	Bit[7:6]: Reserved Bit[5]: Gain trigger priority Bit[4]: Reset trigger option Bit[3]: Target adjust disable Use offset to adjust target 0: Enable 1: Disable Bit[2]: Compensation enable Adjust on offset due to gain change 0: Enable 1: Disable Bit[1]: Dither_en 1 bit dithering 0: Enable 1: Disable Bit[0]: Median_en Meidan filter function enable
0x4001	BLC CTRL 01	0xE0	RW	Bit[7]: r_gain_trig_beh_o Bit[6]: r_format_trig_beh_o Bit[5]: Kocef man enable Bit[4]: Zero in out enable Bit[3]: Black line out enable Bit[1:0]: By pass mode
0x4002	BLC CTRL 02	0x00	RW	Bit[1:0]: Blacklevel target[9:8]
0x4003	BLC CTRL 03	0x10	RW	Bit[7:0]: Blacklevel target[7:0]
0x4004	BLC CTRL 04	0x00	RW	Bit[3:0]: Horizontal win start[11:8]
0x4005	BLC CTRL 05	0x02	RW	Bit[7:0]: Horizontal win start[7:0]
0x4006	BLC CTRL 06	0x00	RW	Bit[3:0]: Horizontal win pad[11:8]
0x4007	BLC CTRL 07	0x02	RW	Bit[7:0]: Horizontal win pad[7:0]
0x4008	BLC CTRL 08	0x02	RW	Bit[7:0]: Black line start line
0x4009	BLC CTRL 09	0x05	RW	Bit[7:0]: Black line end line

Confidential for Sida

table 4-4 BLC control registers (sheet 2 of 2)

address	register name	default value	R/W	description
0x400A	BLC CTRL 0A	0x02	RW	Bit[7:0]: Offset trigger threshold[15:8]
0x400B	BLC CTRL 0B	0x00	RW	Bit[7:0]: Offset trigger threshold[7:0]

4.5 one time programmable (OTP) memory

The OV5695 supports a maximum of 128 bytes of one-time programmable (OTP) memory to store chip identification and manufacturing information, which can be used to update the sensor's default setting and can be controlled through the SCCB. Out of 1k bits (128 bytes), 120 bytes are reserved for OmniVision and 8 bytes are reserved for customers.

4.5.1 OTP other functions

OTP loading data can be triggered when power up or writing 0x01 to register 0x3D81. Power up loading data is enabled by register 0x3D85[2], by default it is on. Auto mode and manual mode can be selected by setting register 0x3D84[6] to 0 and 1, respectively, and by default, it is in auto mode. In auto mode, all data in OTP will be loaded to the OTP buffer; while in manual mode, part of the data which is defined by the start address ({0x3D88,0x3D89}) and the end address ({0x3D8A,0x3D8B}) of the OTP will be loaded to the OTP buffer. The data can be read out through SCCB interface from address 0x7000 to 0x70FF.

The OV5695 supports OTP BIST. When register 0x3D85[4] is set to 1, the BIST function is enabled. When OTP loading data, the data which is read out from the OTP can be compared with zero or the data with the same address in the register, which can be controlled by setting register 0x3D85[5] to 1 or 0, respectively. After the BIST done, the BIST done flag can be read out from register 0x3D81[4], the BIST error flag can be read out from 0x3D81[5], and the address of the first error can be read out from {0x3D8E, 0x3D8F}.

Confidential for Sida

5 register tables

The following tables provide descriptions of the device control registers contained in the OV5695. For all register enable/disable bits, ENABLE = 1 and DISABLE = 0. The device slave addresses are 0x6C for write and 0x6D for read (when SID = 1, device slave addresses are 0x20 for write and 0x21 for read).

5.1 PLL control [0x0100, 0x0103, 0x0300 - 0x0313, 0x031B - 0x031F]

table 5-1 PLL control registers (sheet 1 of 2)

address	register name	default value	R/W	description
0x0100	SC_CTRL0100	0x00	RW	Bit[7:1]: Debug mode Bit[0]: software_standby 0: software_standby 1: Streaming
0x0103	SC_CTRL0103	–	W	Bit[7:1]: Debug mode Bit[0]: software_reset
0x0300	PLL_00	0x04	RW	Bit[7:3]: Not used Bit[2:0]: pll1_pre_div
0x0301	PLL_01	0x00	RW	Bit[7:2]: Not used Bit[1:0]: pll1_multiplier[9:8]
0x0302	PLL_02	0x7D	RW	Bit[7:0]: pll1_multiplier[7:0]
0x0303	PLL_03	0x00	RW	Bit[7:2]: Not used Bit[1:0]: pll1_divpix
0x0304	PLL_04	0x00	RW	Bit[7:1]: Not used Bit[0]: pll1_pix_bitdiv
0x0305	PLL_05	0x01	RW	Bit[7:1]: Not used Bit[0]: pll1_sys_bitdiv
0x0306	PLL_06	0x01	RW	Bit[7:1]: Not used Bit[0]: rsvd_pll6_0
0x0307	PLL_07	0x00	RW	Bit[7:1]: Not used Bit[0]: pll1_predivp
0x0308	PLL_08	0x00	RW	Bit[7:2]: Not used Bit[0]: pll1_byp
0x0309	PLL_09	0x01	RW	Bit[7:3]: Not used Bit[2:0]: pll1_cp
0x030A	PLL_0A	0xAA	RW	Bit[7:0]: pll1_rsvd_0a
0x030B	PLL_0B	0x00	RW	Bit[7:2]: Not used Bit[0]: pll2_pre_div

Confidential for Sida

table 5-1 PLL control registers (sheet 2 of 2)

address	register name	default value	R/W	description
0x030C	PLL_0C	0x00	RW	Bit[7:2]: Not used Bit[1:0]: pll2_mult[9:8]
0x030D	PLL_0D	0x1E	RW	Bit[7:0]: pll2_mult[7:0]
0x030E	PLL_0E	0x05	RW	Bit[7:3]: Not used Bit[2:0]: pll2_sramdiv
0x030F	PLL_0F	0x03	RW	Bit[7:2]: Not used Bit[1:0]: pll2_sa1div
0x0310	PLL_10	0x01	RW	Bit[7:3]: Not used Bit[2:0]: pll2_r_cp
0x0311	PLL_11	0x00	RW	Bit[7:1]: Not used Bit[0]: pll2_byp
0x0312	PLL_12	0x01	RW	Bit[7:6]: Not used Bit[5]: pll2_div_rst_sync Bit[4]: pll2_predivp Bit[1:0]: pll2_r_divdac
0x0313	PLL_13	0x00	RW	Bit[7:0]: pll2_rsvd
0x031B	PLL_1B	0x00	RW	Bit[7:1]: Not used Bit[0]: pll1_rst
0x031C	PLL_1C	0x00	RW	Bit[7:1]: Not used Bit[0]: pll2_rst
0x031E	PLL_1E	0x04	RW	Bit[7:4]: Not used Bit[3]: pll1_no_lat Bit[2:0]: Reserved
0x031F	RSVD	–	–	Reserved

Confidential for Sida

5.2 system control [0x3000 - 0x3022, 0x302A, 0x3040]

table 5-2 system control registers (sheet 1 of 5)

address	register name	default value	R/W	description
0x3000~ 0x3001	RSVD	–	–	Reserved
0x3002	SC_PAD_OEN2	0x21	RW	Bit[7]: io_vsync_oen Bit[6:0]: Reserved
0x3003	SC_SCCB_ID	0x6C	RW	SCCB ID

table 5-2 system control registers (sheet 2 of 5)

address	register name	default value	R/W	description
0x3004	SC_SCCB_ID_ BACKUP	0x20	RW	Backup SCCB ID Used when p_sid_i is 1
0x3005	SC_SCCB_ID2	0x42	RW	SCCB ID2
0x3006~ 0x3007	RSVD	–	–	Reserved
0x3008	SC_PAD_OUT2	0x00	RW	Bit[7]: io_vsync_o Bit[6:0]: Reserved
0x300A	SC_CHIP_ID	0x00	R	chip_id3
0x300B	SC_CHIP_ID	0x56	R	chip_id2
0x300C	SC_CHIP_ID	0x95	R	chip_id1
0x300E~ 0x300F	RSVD	–	–	Reserved
0x3010	SC_PAD_SEL2	0x00	RW	Bit[7]: io_vsync_sel
0x3011	PAD	0x00	RW	Bit[6:5]: I/O pad drive capability 00: 1x 01: 2x 10: 3x 11: 4x
0x3012~ 0x3014	RSVD	–	–	Reserved
0x3015	SC_PUMP_CLK_ DIV	0x20	RW	Bit[6:4]: npump clock div 000: /2 001: /4 010: /8 011: /16 100: /32 101: Disable pump_clk 110: Disable pump_clk 111: Disable pump_clk Bit[2:0]: ppump clock div 000: /2 001: /4 010: /8 011: /16 100: /32 101: Disable pump_clk 110: Disable pump_clk 111: Disable pump_clk

Confidential for Sida

table 5-2 system control registers (sheet 3 of 5)

address	register name	default value	R/W	description
0x3016	SC_MIPI_SC_CTRL	0x32	RW	Bit[7:5]: mipi_lane_mode 0: One lane mode 1: Two lane mode Bit[4]: mipi_en 0: DVP enable 1: MIPI enable Bit[3:2]: r_phy_pd_mipi Bit[1]: phy_rst option 1: Reset PHY when rst_sync Bit[0]: lane_dis option 1: Disable lanes when pd_mipi
0x3017	SC_MIPI_SC_CTRL	0x00	RW	Bit[7:0]: MIPI lane disable
0x3018	SC_CLOCK_GATING	0xF0	RW	Bit[7]: tclk_tc Bit[6]: tclk_snr_ctrl Bit[5]: clk_sync Both SCLK and ram_clk2x Bit[4]: clk_psram ram_clk2x Bit[3]: rst_tc Bit[2]: rst_snr_ctrl Bit[1]: rst_sync Bit[0]: rst_psram
0x3019	SC_CLOCK_GATING	0xF0	RW	Bit[7]: tclk_frex Bit[6]: tclk_strobe Bit[5]: tclk_psv_ctrl Bit[4]: Reserved Bit[3]: rst_frex Bit[2]: rst_strobe Bit[1:0]: Debug mode
0x301A	SC_CLKRST0	0xF0	RW	Bit[7]: sclk_gt Bit[6:4]: Debug mode Bit[3]: mipi_phy_rst_o Bit[2:0]: Debug mode
0x301B	SC_CLKRST1	0xD0	RW	Bit[7]: sclk_blc Bit[6]: sclk_isp Bit[5]: sclk_testmode Bit[4]: sclk_vfifo Bit[3]: rst_blc Bit[2]: rst_isp Bit[1]: rst_testmode Bit[0]: rst_vfifo

Confidential for Sida

table 5-2 system control registers (sheet 4 of 5)

address	register name	default value	R/W	description
0x301C	SC_CLKRST2	0xF0	RW	Bit[7]: pclk_dvp Bit[6]: sclk_mipi Bit[5]: Debug mode Bit[4]: sclk_otp Bit[3]: rst_dvp Bit[2]: rst_mipi Bit[1]: Debug mode Bit[0]: rst_otp
0x301D	SC_CLKRST3	0xD0	RW	Bit[7]: sclk_asram_tst Bit[6]: sclk_grp Bit[5]: sclk_bist Bit[4]: sclk_aec Bit[3]: rst_asram_tst Bit[2]: rst_grp Bit[1]: rst_bist Bit[0]: rst_aec
0x301E	SC_CLKRST4	0xF0	RW	Bit[7]: sclk_ilpwm Bit[6]: pclk_lvds Bit[5]: pclk_vfifo Bit[4]: pclk_mipi Bit[3]: rst_ilpwm Bit[2]: rst_lvds Bit[1]: rst_gt Bit[0]: Debug mode
0x301F	SC_CLKRST5	0xF0	RW	Bit[7]: sclk_fc Bit[6]: sclk_isp_fc Bit[5]: sclk_afc Bit[4]: sclk_clip Bit[3]: rst_fc Bit[2]: rst_isp_fc Bit[1]: rst_afc Bit[0]: rst_clip
0x3020	SC_CLOCK_SEL	0x9B	RW	Bit[5]: sccb_pgm_id_en Bit[4]: sccb_id2_nack Bit[3]: pclk_sel Bit[2]: Debug mode Bit[1]: pclk_inv Reverse pclk Bit[0]: sclk2x_sel

Confidential for Sida

table 5-2 system control registers (sheet 5 of 5)

address	register name	default value	R/W	description
0x3021	SC_MISC_CTRL	0x23	RW	Bit[6]: Sleep no latch option 1: No latch Bit[5]: fst_stby_ctr 0: Software standby enter at v_blk 1: Software standby enter at l_blk Bit[4:3]: Debug mode Bit[2]: gpio_pclk_en Bit[1]: frex_ef_sel Bit[0]: cen_global_o
0x3022	SC_MIPI_SC_CTRL_1	0x01	RW	Bit[7:4]: mipi_bit_sel 0100: 8 bit mode 0101: 10 bit mode 0110: 12 bit mode Others: Debug mode Bit[3]: mipi_lvds_mode_o Bit[2]: Clock lane disable 1 Bit[1]: Clock lane disable 0 Bit[0]: pd_mipi Enable when rst_sync
0x302A	SC_SUB_ID	–	R	Bit[7:4]: Process Bit[3:0]: Version
0x3040	RSVD	–	–	Reserved

5.3 SCCB control [0x3100 - 0x3108]

table 5-3 SCCB registers (sheet 1 of 2)

address	register name	default value	R/W	description
0x3100	SB_SCCB_CTRL	0x00	RW	Bit[3]: r_sda_dly_en Bit[2:0]: r_sda_dly
0x3101	SB_SCCB_OPT	0x32	RW	Bit[5]: Enable register address translating table Bit[4]: en_ss_addr_inc Bit[3]: r_sda_byp_sync 0: Two clock stage sync for sda_i 1: No sync for sda_i Bit[2]: r_scl_byp_sync 0: Two clock stage sync for scl_i 1: No sync for scl_i Bit[1]: r_msk_glitch Bit[0]: r_msk_stop

Confidential for Sida

table 5-3 SCCB registers (sheet 2 of 2)

address	register name	default value	R/W	description
0x3102	SB_SCCB_FILTER	0x00	RW	Bit[7:4]: r_sda_num Bit[3:0]: r_scl_num
0x3103~ 0x3105	RSVD	–	–	Reserved
0x3106	SB_R6	0x15	RW	Bit[7]: sramclk_cutoff_byp Bit[6]: sa1clk_cutoff_byp Bit[5:4]: Debug mode Bit[3:2]: sclk_sel[1:0] Bit[1]: byp_arb Bit[0]: rst_arb
0x3107	SB_R7	0x01	RW	Bit[7]: npump_clk_ausw_dis Bit[6]: npump_clk_sw Bit[5]: auto_slp_dis Bit[4]: pd_mipi_dis_aslp Bit[3]: pumpclk_cutoff_byp Bit[2]: pclk_cutoff_byp Bit[1]: clk_cutoff_byp Bit[0]: sclk_inv
0x3108	SB_R8	0x05	RW	Bit[7]: sram_clk_inv Bit[6:5]: sram_clk_sel Bit[4]: sa1_clk_inv Bit[3:2]: sa1_clk_sel Bit[1]: pad_clk_sel Bit[0]: sleep_en

Confidential for Sida

5.4 sync control [0x4500 - 0x450A]

table 5-4 sync control registers (sheet 1 of 2)

address	register name	default value	R/W	description
0x4500	SYNC_REG0	0x07	RW	Bit[7:6]: rblue_option Bit[4:0]: r_fifo_rdly
0x4501	SYNC_REG1	0x00	RW	Bit[7]: r_skip_man_ctl Bit[6]: read_mem_always_high Bit[5:4]: r_hbin4_opt 00: Average of 4 pixels 01: Summary of 4 pixels 10: Select first bin2 pixel 11: Select last bin2 pixel Bit[3:2]: r_hbin2_opt 00: Average 01: Summary 10: Select first pixel 11: Select last pixel Bit[1]: r_dat_swap Bit[0]: r_srclk_inv
0x4502	SYNC_REG2	0x00	RW	Bit[7:0]: r_data_offset
0x4503	SYNC_REG3	0x00	RW	Bit[7]: r_bar_en Bit[6]: blk_data_opt 0: Use register value 1: Use px_cnt Bit[5]: zline_data_opt 0: Use register value 1: Use px_cnt Bit[4]: 1st_ramp_data_opt 0: Use register value 1: Use px_cnt Bit[1:0]: bar_style 00: Standard bar 01: Normal to gray by line 10: Normal to gray by pixel 11: Same as line count
0x4504	SYNC_REG4	0x00	RW	Bit[7:0]: r_blk_data
0x4505	SYNC_REG5	0x00	RW	Bit[7:0]: r_zline_data
0x4506	SYNC_REG6	0x00	RW	Bit[7:0]: r_1st_ramp_data
0x4507	SYNC_REG7	0x0A	RW	Bit[5]: r_sram_RME Bit[4]: r_sram_TEST Bit[3:0]: r_sram_RM
0x4508	SYNC_FIFO_RD_ START_POINT	0x00	RW	Bit[7:0]: Start point[15:8]

Confidential for Sida

table 5-4 sync control registers (sheet 2 of 2)

address	register name	default value	R/W	description
0x4509	SYNC_FIFO_RD_ START_POINT	0x06	RW	Bit[7:0]: Start point[7:0]
0x450A	SYNC_CTRL0A	0x04	RW	Bit[2]: sync_fifo_one_line_mode Bit[1]: r_mir_man_en Bit[0]: r_mir_man

5.5 sensor control [0x3700 - 0x37DF]

table 5-5 sensor control registers

address	register name	default value	R/W	description
0x3700~ 0x37DF	SENSOR CONTROL REGISTERS	–	–	Debug Mode

5.6 PSRAM control [0x3F00 - 0x3F07]

table 5-6 PSRAM control registers

address	register name	default value	R/W	description
0x3F00~ 0x3F07	PSRAM CONTROL REGISTERS	–	–	Debug Mode

5.7 timing control [0x3800 - 0x3827, 0x3830 - 0x3831]

table 5-7 timing control registers (sheet 1 of 3)

address	register name	default value	R/W	description
0x3800	TIMING_X_ ADDR_START	0x00	RW	Bit[7:0]: Array horizontal start point[15:8]
0x3801	TIMING_X_ ADDR_START	0x00	RW	Bit[7:0]: Array horizontal start point[7:0]

Confidential for sida

table 5-7 timing control registers (sheet 2 of 3)

address	register name	default value	R/W	description
0x3802	TIMING_Y_ ADDR_START	0x00	RW	Bit[7:0]: Array vertical start point[15:8]
0x3803	TIMING_Y_ ADDR_START	0x04	RW	Bit[7:0]: Array vertical start point[7:0]
0x3804	TIMING_X_ ADDR_END	0x0A	RW	Bit[7:0]: Array horizontal end point[15:8]
0x3805	TIMING_X_ ADDR_END	0x3F	RW	Bit[7:0]: Array horizontal end point[7:0]
0x3806	TIMING_Y_ ADDR_END	0x07	RW	Bit[7:0]: Array vertical end point[15:8]
0x3807	TIMING_Y_ ADDR_END	0xAB	RW	Bit[7:0]: Array vertical end point[7:0]
0x3808	TIMING_X_ OUTPUT_SIZE	0x0A	RW	Bit[7:0]: ISP horizontal output width[15:8]
0x3809	TIMING_X_ OUTPUT_SIZE	0x20	RW	Bit[7:0]: ISP horizontal output width[7:0]
0x380A	TIMING_Y_ OUTPUT_SIZE	0x07	RW	Bit[7:0]: ISP vertical output height[15:8]
0x380B	TIMING_Y_OUTPUT_ SIZE	0x98	RW	Bit[7:0]: ISP vertical output height[7:0]
0x380C	TIMING_HTS	0x02	RW	Bit[7:0]: Total horizontal timing size[15:8]
0x380D	TIMING_HTS	0xE4	RW	Bit[7:0]: Total horizontal timing size[7:0]
0x380E	TIMING_VTS	0x07	RW	Bit[7]: Chip debug use only Bit[6:0]: Total vertical timing size[14:8]
0x380F	TIMING_VTS	0xE8	RW	Bit[7:0]: Total vertical timing size[7:0]
0x3810	TIMING_ISP_X_WIN	0x00	RW	Bit[7:0]: ISP horizontal windowing offset[15:8]
0x3811	TIMING_ISP_X_WIN	0x10	RW	Bit[7:0]: ISP horizontal windowing offset[7:0]
0x3812	TIMING_ISP_Y_WIN	0x00	RW	Bit[7:0]: ISP vertical windowing offset[15:8]
0x3813	TIMING_ISP_Y_WIN	0x08	RW	Bit[7:0]: ISP vertical windowing offset[7:0]
0x3814	TIMING_X_INC_ODD	0x01	RW	Bit[4:0]: x_odd_inc
0x3815	TIMING_X_INC_EVEN	0x01	RW	Bit[4:0]: x_even_inc
0x3816	TIMING_Y_INC_ODD	0x01	RW	Bit[4:0]: y_odd_inc
0x3817	TIMING_Y_INC_EVEN	0x01	RW	Bit[4:0]: y_even_inc
0x3818	TIMING_VSYNC_ START	0x00	RW	Bit[7:0]: VSYNC start point[15:8]

Confidential for Sida

table 5-7 timing control registers (sheet 3 of 3)

address	register name	default value	R/W	description
0x3819	TIMING_VSYNC_ START	0x00	RW	Bit[7:0]: VSYNC start point[7:0]
0x381A	TIMING_VSYNC_END	0x00	RW	Bit[7:0]: VSYNC end point[15:8]
0x381B	TIMING_VSYNC_END	0x01	RW	Bit[7:0]: VSYNC end point[7:0]
0x381C~ 0x381F	RSVD	–	–	Reserved
0x3820	TIMING_ FORMAT1	0x80	RW	Bit[7:6]: hdr_mode_o Bit[5]: vflip_blc_o Bit[4]: vflip_o Bit[3]: hmirror_o Bit[2]: hbin4_o Bit[1]: hbin2_o Bit[0]: vbinf_o
0x3821	TIMING_ FORMAT2	0x01	RW	Bit[7:2]: Reserved Bit[1]: hdr_en_o Bit[0]: vsub48_blc
0x3822	TIMING_TC_ R22	0x044	RW	Bit[7:6]: Reserved Bit[5]: r_fix_cnt_en Bit[4]: vts_add_dis Bit[3:0]: r_grp_adj
0x3823	TIMING_TC_ R23	0x08	RW	Bit[7]: ext_vs_re Bit[6]: ext_vs_en Bit[5]: Reserved Bit[4]: init_man Bit[3:0]: ext_vsync_mask
0x3824	TIMING_CS_ RST_FSIN	0x00	RW	CS Reset Value High Byte at vs_ext
0x3825	TIMING_CS_ RST_FSIN	0x20	RW	CS Reset Value Low Byte at vs_ext
0x3826	TIMING_RST_ FSIN	0x00	RW	R Reset Value High Byte at vs_ext
0x3827	TIMING_RST_ FSIN	0x08	RW	R Reset Value Low Byte at vs_ext
0x3830	TIMING_ROW_ COUNTER_H	–	R	tc_r_h
0x3831	TIMING_ROW_ COUNTER_L	–	R	tc_r_l

Confidential for Sidar

5.8 analog [0x3600 - 0x36F2]

table 5-8 analog control registers

address	register name	default value	R/W	description
0x3600~ 0x36F2	ANALOG CONTROL REGISTERS	–	–	Debug Mode

5.9 power control registers [0x3C80 - 0x3C8A, 0x3C8C - 0x3C8D]

table 5-9 power control registers (sheet 1 of 2)

address	register name	default value	R/W	description
0x3C80	PSV_CTRL	0x00	RW	Bit[3]: psv_auto_on_dis 0: PSV mode auto enable if VTS > threshold 1: Disable PSV auto on mode, depending on r_psv_mode_en Bit[2]: r_psv_mode_en Bit[0]: psv_mode 0: Keep SCLK on frame timing base on SCLK 1: Shut off SCLK at blanking, frame timing switch to pad_clk domain
0x3C81	PSV_AUTO_SLEEP_ CTRL	0x00	RW	Bit[3]: tc_sof_sync_en Bit[2]: vblkp_sync_dis Bit[1:0]: blank_retime_opt
0x3C82	PSV_HTS_PAD_CLK	0x00	RW	psv_hts_pad_clk
0x3C83	PSV_HTS_PAD_CLK	0xB1	RW	psv_hts_pad_clk
0x3C84	PSV_CS_CNT_INTIAL	0x00	RW	psv_cs_cnt_intial
0x3C85	PSV_CS_CNT_INTIAL	0x0F	RW	psv_cs_cnt_intial
0x3C86	PSV_STREAM_ST_ OFFSET	0x08	RW	psv_stream_st_offset
0x3C87	PSV_PCHG_ST_ OFFSET	0x08	RW	psv_pchg_st_offset
0x3C88	PSV_CLK_WINP_ OFFSET	0x01	RW	psv_clk_winp_offset
0x3C89	PSV_STRM_REAR_ OFFSET	0x02	RW	psv_strm_rear_offset

Confidential for Sida

table 5-9 power control registers (sheet 2 of 2)

address	register name	default value	R/W	description
0x3C8A	PSV_PCHG_REAR_ OFFSET	0x02	RW	psv_pchg_rear_offset
0x3C8C	PSV_AUTO_ON_ THRESHOLD	0x10	RW	psv_auto_on_threshold
0x3C8D	PSV_AUTO_ON_ THRESHOLD	0x00	RW	psv_auto_on_threshold

5.10 group hold [0x3200 - 0x3208, 0x320C]

table 5-10 group hold registers (sheet 1 of 2)

address	register name	default value	R/W	description
0x3200	GROUP ADR0	0x00	RW	Bit[5:0]: Group0 start address in SRAM Actual address is {0x3200[5:0], 4'h0}
0x3201	GROUP ADR1	0x8	RW	Bit[5:0]: Group1 start address in SRAM Actual address is {0x3201[5:0], 4'h0}
0x3202	GROUP ADR2	0x10	RW	Bit[5:0]: Group2 start address in SRAM Actual address is {0x3202[5:0], 4'h0}
0x3203	GROUP ADR3	0x18	RW	Bit[5:0]: Group3 start address in SRAM Actual address is {0x3203[5:0], 4'h0}
0x3204	GROUP LEN0	–	R	Length of Group0
0x3205	GROUP LEN1	–	R	Length of Group1
0x3206	GROUP LEN2	–	R	Length of Group2
0x3207	GROUP LEN3	–	R	Length of Group3
0x3208	GROUP ACCESS	–	W	Bit[7:4]: group_ctrl 0000: Group hold start 0001: Group hold end 1010: Group launch 1110: Fast group launch Others: Reserved Bit[3:0]: Group ID 0000: Group bank 0 0001: Group bank 1 0010: Group bank 2 0011: Group bank 3 Others: Reserved

Confidential for Sidac

table 5-10 group hold registers (sheet 2 of 2)

address	register name	default value	R/W	description
0x320C	SRAM TEST	0x0A	RW	Bit[7:5]: Not used Bit[4]: test_srm Bit[3:0]: Group hold SRAM RM[3:0]

5.11 ASRAM test [0x3300 - 0x3318]

table 5-11 ASRAM test registers

address	register name	default value	R/W	description
0x3300~ 0x3318	ASRAM TEST REGISTERS	–	–	Debug Mode

5.12 MEC/MGC control [0x3500 - 0x3503, 0x3505, 0x3507 - 0x3512]

table 5-12 MEC/MGC control registers (sheet 1 of 3)

address	register name	default value	R/W	description
0x3500	LONG EXPO	0x00	RW	Bit[7:4]: Not used Bit[3:0]: Long exposure[19:16]
0x3501	LONG EXPO	0x7B	RW	Bit[7:0]: Long exposure[15:8]
0x3502	LONG EXPO	0x00	RW	Bit[7:0]: Long exposure[7:0] Low 4 bits are fraction bits

Confidential for Sida

table 5-12 MEC/MGC control registers (sheet 2 of 3)

address	register name	default value	R/W	description
0x3503	AEC MANUAL	0x00	RW	Bit[7]: Not used Bit[6]: Digital fraction gain delay option 0: Delay 1 frame 1: Do not delay 1 frame Bit[5]: Gain change delay option 0: Delay 1 frame 1: Do not delay 1 frame Bit[4]: Gain delay option 0: Delay 1 frame 1: Do not delay 1 frame Bit[3]: gain_prec16_en Bit[2]: Gain manual as sensor gain 0: Input gain as real gain format 1: Input gain as sensor gain format Bit[1]: Exposure delay option (must be 0) 0: Delay 1 frame 1: Not used Bit[0]: Exposure change delay option (must be 0) 0: Delay 1 frame 1: Not used
0x3505	GCVT OPTION	0x80	RW	Gain Conversation Option Bit[7]: dac_finegain_highbit Bit[6]: switch_snr_gain_en Bit[5:4]: Sensor gain fixed bit Bit[3:2]: Sensor gain pregain option (debug only, always set to 0) Bit[1:0]: Sensor gain option for transferring real gain to sensor gain format
0x3507	GAIN SHIFT	0x00	RW	Bit[7:2]: Not used Bit[1:0]: Gain shift option 00: No shift 01: Left shift 1 bit 10: Left shift 2 bit 11: Left shift 3 bit
0x3508	LONG GAIN	0x00	RW	Bit[7:5]: Not used Bit[4:0]: Long gain[12:8]

Confidential for Sida

table 5-12 MEC/MGC control registers (sheet 3 of 3)

address	register name	default value	R/W	description
0x3509	LONG GAIN	0x80	RW	Bit[7:0]: Long gain[7:0] If 0x3503[2]=0, gain[7:0] is real gain format, where low 4 bits are fraction bits. For example, 0x10 is 1x gain, 0x28 is 2.5x gain If 0x3503[2]=1, gain[7:0] is sensor gain format, gain[7:4] is coarse gain, 00000: 1x, 00001: 2x, 00011: 4x, 00111: 8x, gain[7] is 1, gain[3:0] is fine gain. For example, 0x10 is 1x gain, 0x30 is 2x gain, 0x70 is 4x gain
0x350A	LONG DIGIGAIN	0x04	RW	Bit[7:0]: Long digital gain[13:6]
0x350B	LONG DIGIGAIN	0x00	RW	Bit[7:6]: Not used Bit[5:0]: Long digital gain[5:0] Low 10 bits are fraction bits
0x350C	SHORT GAIN	0x00	RW	Bit[7:5]: Not used Bit[4:0]: Short gain[12:8]
0x350D	SHORT GAIN	0x80	RW	Bit[7:0]: Short gain[7:0]
0x350E	SHORT DIGIGAIN	0x04	RW	Bit[7:0]: Short digital gain[13:6]
0x350F	SHORT DIGIGAIN	0x00	RW	Bit[7:6]: Not used Bit[5:0]: Short digital gain[5:0] Low 10 bits are fraction bits
0x3510	SHORT EXPO	0x00	RW	Bit[7:4]: Not used Bit[3:0]: Short exposure[19:16]
0x3511	SHORT EXPO	0x02	RW	Bit[7:0]: Short exposure[15:8]
0x3512	SHORT EXPO	0x00	RW	Bit[7:0]: Short exposure[7:0] Low 4 bits are fraction bits

Confidential for Sida

5.13 OTP control [0x3D80 - 0x3D8B, 0x3D8E - 0x3D91]

table 5-13 OTP control registers (sheet 1 of 2)

address	register name	default value	R/W	description
0x3D80	OTP_PROGRAM_ CTRL	–	RW	Bit[7]: OTP_wr_busy Read only Bit[6:1]: Not used Bit[0]: OTP_program_enable Write only
0x3D81	OTP_LOAD_CTRL	–	RW	Bit[7]: OTP_rd_busy Read only Bit[6]: Not used Bit[5]: OTP_bist_error Read only Bit[4]: OTP_bist_done Read only Bit[3:1]: Not used Bit[0]: OTP_load_enable Write only
0x3D82	OTP_PGM_ PULSE	0x88	RW	Program Strobe Pulse Width Unit: 8×system clock period
0x3D83	OTP_LOAD_ PULSE	0x06	RW	Load Strobe Pulse Width Unit: system clock period
0x3D84	OTP_MODE_ CTRL	0x80	RW	Bit[7]: Program disable 0: Not used 1: Disable Bit[6]: Mode select 0: Auto mode 1: Manual mode Bit[5:0]: Debug mode
0x3D85	OTP_REG85	0x14	RW	Bit[7:3]: Debug mode Bit[2]: OTP power up load data enable Bit[1]: OTP power up load setting enable Bit[0]: OTP write register load setting enable
0x3D86	SRAM_TEST_ SIGNALS	0x09	RW	Bit[7:4]: Debug mode Bit[3]: rst_otp_manual Bit[2]: r_test Bit[1:0]: r_rm
0x3D87	OTP_PS2CS	0x0A	RW	OTP PS to CSB Delay Unit: system clock period
0x3D88	OTP_START_ ADDRESS	0x00	RW	OTP Start High Address for Manual Mode
0x3D89	OTP_START_ ADDRESS	0x00	RW	OTP Start Low Address for Manual Mode

Confidential for Sida

table 5-13 OTP control registers (sheet 2 of 2)

address	register name	default value	R/W	description
0x3D8A	OTP_EN_ ADDRESS	0x00	RW	OTP End High Address for Manual Mode
0x3D8B	OTP_END_ ADDRESS	0x00	RW	OTP End Low Address for Manual Mode
0x3D8E	OTP_BIST_ERR_ ADDRESS	–	R	OTP Check Error Address High
0x3D8F	OTP_BIT_ERR_ ADDRESS	–	R	OTP Check Error Address Low
0x3D90	OTP_STROBE_ GAP_PGM	0x12	RW	Gap Between Strobe Pulse When Programming
0x3D91	OTP_STROBE_ GAP_LOAD	0x06	RW	Gap Between Strobe Pulse When Loading

5.14 BIST control [0x3E00 - 03E13]

table 5-14 BIST control registers (sheet 1 of 2)

address	register name	default value	R/W	description
0x3E00	START ADDRESS	0x00	RW	Bit[7:0]: start_address[15:8]
0x3E01	START ADDRESS	0x00	RW	Bit[7:0]: start_address[7:0]
0x3E02	END ADDRESS	0x0F	RW	Bit[7:0]: end_address[15:8]
0x3E03	END ADDRESS	0xDB	RW	Bit[7:0]: end_address[7:0]
0x3E04	BIST OP CNT	0x14	RW	Bit[7:5]: Not used Bit[4:0]: bist_op_cnt[4:0]
0x3E05	IP BIST SPECIAL DATA	0x00	RW	Bit[7:0]: ip_bist_special_data[7:0]
0x3E06	SRAM SELECT	0x03	RW	Bit[7:6]: Not used Bit[5:0]: sram_select[5:0]
0x3E07	BIST CONTROL	0x20	RW	Bit[7:6]: Not used Bit[5]: ip_bist_mode Bit[4]: ip_bist_special Bit[3]: ip_bist_readonly Bit[2:0]: Not used
0x3E08	IP BIST ERR ADDR	–	R	Bit[7:0]: ip_bist_err_addr[15:8]

Confidential for Sida

table 5-14 BIST control registers (sheet 2 of 2)

address	register name	default value	R/W	description
0x3E09	IP BIST ERR ADDR	–	R	Bit[7:0]: ip_bist_err_addr[7:0]
0x3E0A	IP BIST ERR DATA	–	R	Bit[7:0]: ip_bist_err_data[7:0]
0x3E0B	IP BIST REF DATA	–	R	Bit[7:0]: ip_bist_ref_data[7:0]
0x3E0C	BIST INFO	–	R	Bit[7:6]: Not used Bit[5]: ip_bist_busy Bit[4]: Not used Bit[3:0]: ip_bist_err_byte
0x3E0D	BIST RESULT	–	R	Bit[7:0]: bist_result[23:16]
0x3E0E	BIST RESULT	–	R	Bit[7:0]: bist_result[15:8]
0x3E0F	BIST RESULT	–	R	Bit[7:0]: bist_result[7:0]
0x3E10	BIST TEST MODE	0x00	RW	Bit[7:0]: bist_test_mode
0x3E11	BIST DONE	–	R	Bit[7:1]: Not used Bit[0]: bist_done
0x3E12	SRAM DATA IN	–	R	Bit[7:0]: sram data in
0x3E13	RD BYTE SEL	0x00	RW	Bit[7:4]: Not used Bit[3:0]: rd_byte_sel

5.15 clip control [0x4300 - 0x4302]

table 5-15 clip control registers

address	register name	default value	R/W	description
0x4300	CLIP MAX HI	0xFF	RW	Bit[7:0]: clip_max[11:4]
0x4301	CLIP MIN HI	0x00	RW	Bit[7:0]: clip_min[11:4]
0x4302	CLIP LO	0x0F	RW	Bit[7:4]: clip_min[3:0] Bit[3:0]: clip_max[3:0]

Confidential for Sic

5.16 MIPI control [0x4800 - 0x4839, 0x483C - 0x483D, 0x4848 - 0x484F]

table 5-16 MIPI control registers (sheet 1 of 8)

address	register name	default value	R/W	description
0x4800	MIPI CTRL00	0x04	RW	Bit[7:6]: Reserved Bit[5]: gate_sc_en 0: Clock lane is free running 1: Gate clock lane when there is no packet to transmit Bit[4]: line_sync_en 0: Do not send line short packet for each line 1: Send line short packet for each line Bit[3]: Reserved Bit[2]: pclk_inv Bit[1]: first_bit Change clock lane first bit 0: Output 0xAA 1: Output 0x55 Bit[0]: LPX select for pclk 0: Calculate t_lpx_p automatically 1: Use lpx_min[7:0]
0x4801	RSVD	–	–	Reserved
0x4802	MIPI CTRL02	0x00	RW	Bit[7]: hs_prepare_sel 0: Auto calculate T_hs_prepare, unit pclk2x 1: Use hs_prepare_min_o[7:0] Bit[6]: clk_prepare_sel 0: Auto calculate T_clk_prepare, unit pclk2x 1: Use clk_prepare_min_o[7:0] Bit[5]: clk_post_sel 0: Auto calculate T_clk_post, unit pclk2x 1: Use clk_post_min_o[7:0] Bit[4]: clk_trail_sel 0: Auto calculate T_clk_trail, unit pclk2x 1: Use clk_trail_min_o[7:0] Bit[3]: hs_exit_sel 0: Auto calculate T_hs_exit, unit pclk2x 1: Use hs_exit_min_o[7:0] Bit[2]: hs_zero_sel 0: Auto calculate T_hs_zero, unit pclk2x 1: Use hs_zero_min_o[7:0] Bit[1]: hs_trail_sel 0: Auto calculate T_hs_trail, unit pclk2x 1: Use hs_trail_min_o[7:0] Bit[0]: clk_zero_sel 0: Auto calculate T_clk_zero, unit pclk2x 1: Use clk_zero_min_o[7:0]

Confidential for Sida

table 5-16 MIPI control registers (sheet 2 of 8)

address	register name	default value	R/W	description
0x4803	MIPI CTRL03	0x00	RW	Bit[4]: fifo_rd_spd_o Bit[3]: manu_ofset_o t_period manual offset SMIA Bit[2]: r_manu_half2one t_period half to 1 SMIA Bit[1:0]: Reserved
0x4804	RSVD	–	–	Reserved
0x4805	MIPI CTRL05	0x00	RW	Bit[3]: lpda_retim_manu_o Bit[2]: lpda_retim_sel_o 0: Not used 1: Manual Bit[1]: lpck_retim_manu_o Bit[0]: lpck_retim_sel_o 0: Not used 1: Manual
0x4806	MIPI CTRL06	0x00	RW	Bit[4]: pu_mark_en_o Power up mark1 enable Bit[3]: mipi_remot_rst Bit[2]: mipi_susp Bit[1]: smia_lane_ch_en Bit[0]: tx_lsb_first 0: High bit first 1: Low power transmit low bit first
0x4807	MIPI CTRL07	0x03	RW	Bit[3:0]: sw_t_lpx Ultra low power T_lpx
0x4808	MIPI CTRL08	0x18	RW	Bit[7:0]: wkup_dly Mark1 wakeup delay/2^10
0x4809	MIPI CTRL09	0x04	RW	Bit[7]: hcnt_end_man_en Bit[6]: cs_cnt_end_man Bit[5:0]: pkt_start_offset
0x480A	HCNT_END_H	0x00	RW	Bit[7:0]: r_hcnt_end_man[15:8]
0x480B	HCNT_END_L	0x00	RW	Bit[7:0]: r_hcnt_end_man[7:0]
0x480C	MIPI CTRL0C	0x12	RW	Bit[7]: mipi_pkt_start_man Use pkt_start_offset as pkt start offset Bit[6:4]: r_mask_ln_num Actual lines masked is 2×r_mask_ln_num Bit[3:0]: fifo_start_size
0x480D~ 0x480F	RSVD	–	–	Reserved
0x4810	FCNT MAX	0xFF	RW	Bit[7:0]: fcnt_max[15:8] High byte of maximum frame counter of frame sync short packet

Confidential for Sida

table 5-16 MIPI control registers (sheet 3 of 8)

address	register name	default value	R/W	description
0x4811	FCNT MAX	0xFF	RW	Bit[7:0]: fcnt_max[7:0] Low byte of maximum frame counter of frame sync short packet
0x4812	RSVD	–	–	Reserved
0x4813	MIPI CTRL13	0x00	RW	Bit[2]: vc_sel Bit[1:0]: VC ID
0x4814	MIPI CTRL14	0x2A	RW	Bit[7]: Not used Bit[6]: lpkt_dt_sel 0: Use mipi_dt 1: Use dt_man_o as long packet data Bit[5:0]: dt_man Manual data type
0x4815~ 0x4817	RSVD	–	–	Reserved
0x4818	HS ZERO MIN	0x00	RW	Bit[1:0]: hs_zero_min[9:8] High byte of minimum value of hs_zero, unit ns
0x4819	HS ZERO MIN	0x70	RW	Bit[7:0]: hs_zero_min[7:0] Low byte of minimum value of hs_zero, unit ns hs_zero_real = hs_zero_min_o + Tui*ui_hs_zero_min_o
0x481A	HS TRAIL MIN	0x00	RW	Bit[7:2]: Not used Bit[1:0]: hs_trail_min[9:8] High byte of minimum value of hs_trail, unit ns
0x481B	HS TRAIL MIN	0x3C	RW	Bit[7:0]: hs_trail_min[7:0] Low byte of minimum value of hs_trail, unit ns hs_trail_real = hs_trail_min_o + Tui*ui_hs_trail_min_o
0x481C	CLK ZERO MIN	0x01	RW	Bit[7:2]: Not used Bit[1:0]: clk_zero_min[9:8] High byte of minimum value of clk_zero, unit ns
0x481D	CLK ZERO MIN	0x2C	RW	Bit[7:0]: clk_zero_min[7:0] Low byte of minimum value of clk_zero, unit ns clk_zero_real = clk_zero_min_o + Tui*ui_clk_zero_min_o
0x481E	CLK PREPARE MAX	0x5F	RW	Bit[7:0]: clk_prepare_max[7:0] Maximum value of clk_prepare, unit ns

Confidential for Sida

table 5-16 MIPI control registers (sheet 4 of 8)

address	register name	default value	R/W	description
0x481F	CLK PREPARE MIN	0x26	RW	Bit[7:0]: clk_prepare_min[7:0] Minimum value of clk_prepare, unit ns clk_prepare_real = clk_prepare_min_o + Tui*ui_clk_prepare_min_o
0x4820	CLK POST MIN	0x00	RW	Bit[7:2]: Not used Bit[1:0]: clk_post_min[9:8] High byte of minimum value of clk_post, unit ns
0x4821	CLK POST MIN	0x3C	RW	Bit[7:0]: clk_post_min[7:0] Low byte of minimum value of clk_post, unit ns clk_post_real = clk_post_min_o + Tui*ui_clk_post_min_o
0x4822	CLK TRAIL MIN	0x00	RW	Bit[7:2]: Not used Bit[1:0]: clk_trail_min[9:8] High byte of minimum value of clk_trail, unit ns
0x4823	CLK TRAIL MIN	0x3C	RW	Bit[7:0]: clk_trail_min[7:0] Low byte of minimum value of clk_trail, unit ns clk_trail_real = clk_trail_min_o + Tui*ui_clk_trail_min_o
0x4824	LPX P MIN	0x00	RW	Bit[7:2]: Not used Bit[1:0]: lpx_p_min[9:8] High byte of minimum value of lpx_p, unit ns
0x4825	LPX P MIN	0x32	RW	Bit[7:0]: lpx_p_min[7:0] Low byte of minimum value of lpx_p, unit ns lpx_p_real = lpx_p_min_o + Tui*ui_lpx_p_min_o
0x4826	HS PREPARE MIN	0x32	RW	Bit[7:0]: hs_prepare_min[7:0] Minimum value of hs_prepare, unit ns
0x4827	HS PREPARE MAX	0x55	RW	Bit[7:0]: hs_prepare_max[7:0] Maximum value of hs_prepare, unit ns hs_prepare_real = hs_prepare_max_o + Tui*ui_hs_prepare_max_o
0x4828	HS EXIT MIN	0x00	RW	Bit[7:2]: Not used Bit[1:0]: hs_exit_min[9:8] High byte of minimum value of hs_exit, unit ns

Confidential for Sida

table 5-16 MIPI control registers (sheet 5 of 8)

address	register name	default value	R/W	description
0x4829	HS EXIT MIN	0x64	RW	Bit[7:0]: hs_exit_min[7:0] Low byte of minimum value of hs_exit, unit ns hs_exit_real = hs_exit_min_o + Tui*ui_hs_exit_min_o
0x482A	UI HS ZERO MIN	0x06	RW	Bit[7:6]: Not used Bit[5:0]: ui_hs_zero_min[5:0] Minimum UI value of hs_zero, unit UI
0x482B	UI HS TRAIL MIN	0x04	RW	Bit[7:6]: Not used Bit[5:0]: ui_hs_trail_min[5:0] Minimum UI value of hs_trail, unit UI
0x482C	UI CLK ZERO MIN	0x00	RW	Bit[7:6]: Not used Bit[5:0]: ui_clk_zero_min[5:0] Minimum UI value of clk_zero, unit UI
0x482D	UI CLK PREPARE	0x00	RW	Bit[7:4]: ui_clk_prepare_max Maximum UI value of clk_prepare, unit UI Bit[3:0]: ui_clk_prepare_min Minimum UI value of clk_prepare, unit UI
0x482E	UI CLK POST MIN	0x34	RW	Bit[7:6]: Not used Bit[5:0]: ui_clk_post_min[5:0] Minimum UI value of clk_post, unit UI
0x482F	UI CLK TRAIL MIN	0x00	RW	Bit[7:6]: Not used Bit[5:0]: ui_clk_trail_min[5:0] Minimum UI value of clk_trail, unit UI
0x4830	UI LPX P MIN	0x00	RW	Bit[7:6]: Not used Bit[5:0]: ui_lpx_p_min[5:0] Minimum UI value of lpx_p (pclk2x domain), unit UI
0x4831	UI HS PREPARE	0x64	RW	Bit[7:4]: ui_hs_prepare_max Maximum UI value of hs_prepare, unit UI Bit[3:0]: ui_hs_prepare_min Minimum UI value of hs_prepare, unit UI
0x4832	UI HS EXIT MIN	0x00	RW	Bit[7:6]: Not used Bit[5:0]: ui_hs_exit_min[5:0] Minimum UI value of hs_exit, unit UI
0x4833	MIPI PKT STAR SIZE	0x08	RW	Bit[7:6]: Not used Bit[5:0]: r_rdy_mark
0x4834~ 0x4836	RSVD	–	–	Reserved
0x4837	PCLK PERIOD	0x10	RW	Bit[7:0]: pclk_period[7:0] Period of pclk2x, pclk_div=1, and 1 bit decimal

Confidential for Sida

table 5-16 MIPI control registers (sheet 6 of 8)

address	register name	default value	R/W	description
0x4838	MIPI LP GPIO0	0x00	RW	Bit[7]: lp_sel0 0: Auto generate mipi_lp_dir0_o 1: Use lp_dir_man0 to be mipi_lp_dir0_o Bit[6]: lp_dir_man0 0: Input 1: Output Bit[5]: lp_p0_o Bit[4]: lp_n0_o Bit[3]: lp_sel1 0: Auto generate mipi_lp_dir1_o 1: Use lp_dir_man1 to be mipi_lp_dir1_o Bit[2]: lp_dir_man1 0: Input 1: Output Bit[1]: lp_p1_o Bit[0]: lp_n1_o
0x4839	MIPI LP GPIO1	0x00	RW	Bit[7]: lp_sel2 0: Auto generate mipi_lp_dir2_o 1: Use lp_dir_man2 to be mipi_lp_dir2_o Bit[6]: lp_dir_man2 0: Input 1: Output Bit[5]: lp_p2_o Bit[4]: lp_n2_o Bit[3]: lp_sel3 0: Auto generate mipi_lp_dir3_o 1: Use lp_dir_man3 to be mipi_lp_dir3_o Bit[2]: lp_dir_man3 0: Input 1: Output Bit[1]: lp_p3_o Bit[0]: lp_n3_o
0x483C	MIPI CTRL3C	0x02	RW	Bit[7:4]: Not used Bit[3:0]: t_clk_pre Unit: pclk2x cycle

Confidential for Sida

table 5-16 MIPI control registers (sheet 7 of 8)

address	register name	default value	R/W	description
0x483D	MIPI LP GPIO4	0x00	RW	Bit[7]: lp_ck_sel0 0: Auto generate mipi_ck_lp_dir0_o 1: Use lp_ck_dir_man0 to be mipi_ck_lp_dir0_o Bit[6]: lp_ck_dir_man0 0: Input 1: Output Bit[5]: lp_ck_p0_o Bit[4]: lp_ck_n0_o Bit[3]: lp_ck_sel1 0: Auto generate mipi_ck_lp_dir1_o 1: Use lp_ck_dir_man1 to be mipi_ck_lp_dir1_o Bit[2]: lp_ck_dir_man1 0: Input 1: Output Bit[1]: lp_ck_p1_o Bit[0]: lp_ck_n1_o
0x4848	MIPI FCNT	–	R	Bit[7:0]: MIPI frame counter[15:8]
0x4849	MIPI FCNT	–	R	Bit[7:0]: MIPI frame counter[7:0]
0x484A	SEL MIPI CTRL4A	0x3F	RW	Bit[7:6]: Not used Bit[5]: slp_lp_pon_man_o Set for power up Bit[4]: slp_lp_pon_da Bit[3]: slp_lp_pon_ck Bit[2]: mipi_slp_man_st MIPI bus status manual control enable in sleep mode Bit[1]: clk_lane_state Bit[0]: data_lane_state
0x484B	SMIA OPTION	0x07	RW	Bit[7:2]: Not used Bit[1]: clk_start_sel_o 0: Clock starts after SOF 1: Clock starts after reset Bit[0]: sof_sel_o 0: Frame starts after HREF occurs 1: Frame starts after SOF
0x484C	SEL MIPI CTRL4C	0x00	RW	Bit[3]: smia_fcnt_i select Bit[2]: prbs_enable Bit[1]: hs_test_only MIPI high speed only test mode enable Bit[0]: set_frame_cnt_0 Set frame counter to inactive mode
0x484D	TEST PATTEN DATA	0xB6	RW	Bit[7:0]: test_patten_data[7:0] Data lane test pattern

Confidential for Sida

table 5-16 MIPI control registers (sheet 8 of 8)

address	register name	default value	R/W	description
0x484E	FE DLY	0x10	RW	Bit[7:0]: r_fe_dly_o Last packet to frame end delay / 2
0x484F	TEST PATTEN CK DATA	0x55	RW	Bit[7:2]: Not used Bit[1:0]: clk_test_patten_reg

5.17 ISPFC [0x4900 - 0x4903]

table 5-17 ISPFC control registers

address	register name	default value	R/W	description
0x4900	R0	0x00	RW	Bit[7:4]: Not used Bit[3]: sof_after_line0 Bit[2]: fcnt_eof_sel Bit[1]: fcnt_mask_dis Bit[0]: fcnt_reset
0x4901	R1	0x00	RW	Bit[7:4]: Not used Bit[3:0]: frame_on_number
0x4902	R2	0x00	RW	Bit[7:4]: Not used Bit[3:0]: frame_off_number 0x4901, 0x 4902=x,0: on x frames and off 0x4901, 0x4902=0,x: off x frames and on 0x4901, 0x4902=x,y: on x frames and off y frames
0x4903	R3	0x00	RW	Bit[7]: zero_line_mask_dis Bit[6]: rblue_mask_dis Bit[5]: data_mask_dis Bit[4]: valid_mask_dis Bit[3]: href_mask_dis Bit[2]: eof_mask_dis Bit[1]: sof_mask_dis Bit[0]: all_mask_dis

Confidential for Sida

5.18 BLC [0x4000 - 0x4017, 0x4030 - 0x403F, 0x404C - 0x404E, 0x4060 - 0x406F]

table 5-18 BLC control registers (sheet 1 of 3)

address	register name	default value	R/W	description
0x4000	BLC CTRL 00	0x33	RW	Bit[7:6]: Reserved Bit[5]: Gain trigger priority Bit[4]: Reset trigger option Bit[3]: Target adjust disable Use offset to adjust target 0: Enable 1: Disable Bit[2]: Compensation enable Adjust on offset due to gain change 0: Enable 1: Disable Bit[1]: Dither_en 1 bit dithering 0: Enable 1: Disable Bit[0]: Median_en Meidan filter function enable
0x4001	BLC CTRL 01	0xE0	RW	Bit[7]: r_gain_trig_beh_o Bit[6]: r_format_trig_beh_o Bit[5]: Kocef man enable Bit[4]: Zero In out enable Bit[3]: Black line out enable Bit[1:0]: By pass mode
0x4002	BLC CTRL 02	0x00	RW	Bit[1:0]: Blacklevel target[9:8]
0x4003	BLC CTRL 03	0x10	RW	Bit[7:0]: Blacklevel target[7:0]
0x4004	BLC CTRL 04	0x00	RW	Bit[3:0]: Horizontal win start[11:8]
0x4005	BLC CTRL 05	0x02	RW	Bit[7:0]: Horizontal win start[7:0]
0x4006	BLC CTRL 06	0x00	RW	Bit[3:0]: Horizontal win pad[11:8]
0x4007	BLC CTRL 07	0x02	RW	Bit[7:0]: Horizontal win pad[7:0]
0x4008	BLC CTRL 08	0x02	RW	Bit[7:0]: Black line start line
0x4009	BLC CTRL 09	0x05	RW	Bit[7:0]: Black line end line
0x400A	BLC CTRL 0A	0x02	RW	Bit[7:0]: Offset trigger threshold[15:8]
0x400B	BLC CTRL 0B	0x00	RW	Bit[7:0]: Offset trigger threshold[7:0]
0x400C~ 0x400F	RSVD	–	–	Reserved

Confidential for Sida

table 5-18 BLC control registers (sheet 2 of 3)

address	register name	default value	R/W	description
0x4010	BLC CTRL 10	0xF0	RW	Bit[7]: Offset trigger enable Bit[6]: Gain change trigger enable Bit[5]: Format change trigger enable Bit[4]: Reset trigger enable Bit[3]: Manual average enable Bit[2]: Manual trigger Bit[1]: Freeze enable Bit[0]: Offset always update
0x4011	BLC CTRL 11	0xFF	RW	Bit[7]: offset_cmp_man_en Bit[6]: Offset trigger multiframe enable Bit[5]: Format trigger multiframe enable Bit[4]: Gain trigger multiframe enable Bit[3]: Reset trigger multiframe enable Bit[2]: Offset trigger MF mode Bit[1]: Format trigger MF mode Bit[0]: Gain trigger MF mode
0x4012	BLC CTRL 12	0x08	RW	Bit[5:0]: Reset trigger frame number
0x4013	BLC CTRL 13	0x02	RW	Bit[5:0]: Format trigger frame number
0x4014	BLC CTRL 14	0x02	RW	Bit[5:0]: Gain trigger frame number
0x4015	BLC CTRL 15	0x02	RW	Bit[5:0]: Offset trigger frame number
0x4016	BLC CTRL 16	0x00	RW	Bit[1:0]: Offset trigger threshold[9:8]
0x4017	BLC CTRL 17	0x04	RW	Bit[7:0]: Offset trigger threshold[7:0]
0x4030	BLC CTRL 30	0x00	RW	Bit[1:0]: Offset man 000[9:8]
0x4031	BLC CTRL 31	0x00	RW	Bit[7:0]: Offset man 000[7:0]
0x4032	BLC CTRL 32	0x00	RW	Bit[1:0]: Offset man 001[9:8]
0x4033	BLC CTRL 33	0x00	RW	Bit[7:0]: Offset man 001[7:0]
0x4034	BLC CTRL 34	0x00	RW	Bit[1:0]: Offset man 010[9:8]
0x4035	BLC CTRL 35	0x00	RW	Bit[7:0]: Offset man 010[7:0]
0x4036	BLC CTRL 36	0x00	RW	Bit[1:0]: Offset man 011[9:8]
0x4037	BLC CTRL 37	0x00	RW	Bit[7:0]: Offset man 011[7:0]
0x4038	BLC CTRL 38	0x00	RW	Bit[1:0]: Offset man 100[9:8]
0x4039	BLC CTRL 39	0x00	RW	Bit[7:0]: Offset man 100[7:0]
0x403A	BLC CTRL 3A	0x00	RW	Bit[1:0]: Offset man 101[9:8]
0x403B	BLC CTRL 3B	0x00	RW	Bit[7:0]: Offset man 101[7:0]
0x403C	BLC CTRL 3C	0x00	RW	Bit[1:0]: Offset man 110[9:8]

Confidential for Sida

table 5-18 BLC control registers (sheet 3 of 3)

address	register name	default value	R/W	description
0x403D	BLC CTRL 3D	0x00	RW	Bit[7:0]: Offset man 110[7:0]
0x403E	BLC CTRL 3E	0x00	RW	Bit[1:0]: Offset man 111[9:8]
0x403F	BLC CTRL 3F	0x00	RW	Bit[7:0]: Offset man 111[7:0]
0x404C	BLC CTRL 4C	0x60	RW	Bit[6]: rst_trig_opt Bit[5:0]: Average weigtht
0x404D	BLC CTRL 4D	0x00	RW	Bit[1:0]: rnd_gain_th[9:8]
0x404E	BLC CTRL 4E	0x00	RW	Bit[7:0]: rnf_gain_th[7:0]
0x4060	BLC CTRL 60	–	R	Bit[1:0]: BLC_offset000[9:8]
0x4061	BLC CTRL 61	–	R	Bit[7:0]: BLC_offset000[7:0]
0x4062	BLC CTRL 62	–	R	Bit[1:0]: BLC_offset001[9:8]
0x4063	BLC CTRL 63	–	R	Bit[7:0]: BLC_offset001[7:0]
0x4064	BLC CTRL 64	–	R	Bit[1:0]: BLC_offset010[9:8]
0x4065	BLC CTRL 65	–	R	Bit[7:0]: BLC_offset010[7:0]
0x4066	BLC CTRL 66	–	R	Bit[1:0]: BLC_offset011[9:8]
0x4067	BLC CTRL 67	–	R	Bit[7:0]: BLC_offset011[7:0]
0x4068	BLC CTRL 68	–	R	Bit[1:0]: BLC_offset100[9:8]
0x4069	BLC CTRL 69	–	R	Bit[7:0]: BLC_offset100[7:0]
0x406A	BLC CTRL 6A	–	R	Bit[1:0]: BLC_offset101[9:8]
0x406B	BLC CTRL 6B	–	R	Bit[7:0]: BLC_offset101[7:0]
0x406C	BLC CTRL 6C	–	R	Bit[1:0]: BLC_offset110[9:8]
0x406D	BLC CTRL 6D	–	R	Bit[7:0]: BLC_offset110[7:0]
0x406E	BLC CTRL 6E	–	R	Bit[1:0]: BLC_offset111[9:8]
0x406F	BLC CTRL 6F	–	R	Bit[7:0]: BLC_offset111[7:0]

Confidential for Sida

5.19 ISP control [0x5000 - 0x5030]

table 5-19 ISP control registers (sheet 1 of 2)

address	register name	default value	R/W	description
0x5000	ISP CTRL00	0x17	RW	Bit[7]: blc_hdr_en Bit[6:5]: Reserved Bit[4]: awb_gain_en Bit[3]: Reserved Bit[2]: bc_en Bit[1]: wc_en Bit[0]: blc_en
0x5001	ISP CTRL01	0xCA	R/W	Bit[7:4]: Reserved Bit[3]: otp_dpc_en Bit[2]: Reserved Bit[1]: awbm_bias_on Bit[0]: latch_en
0x5002	ISP CTRL02	0x22	R/W	Bit[7:6]: dig_gain_blc Bit[5]: bufctrl_en Bit[4:0]: Reserved
0x5003~ 0x5011	RSVD	–	–	Reserved
0x5012	ISP CTRL12	0x00	R/W	Bit[3:0]: dig_gain_l[11:8]
0x5013	ISP CTRL13	0x00	R/W	Bit[7:0]: dig_gain_l[7:0]
0x5014	ISP CTRL14	0x00	R/W	Bit[3:0]: dig_gain_s[11:8]
0x5015	ISP CTRL15	0x00	R/W	Bit[7:0]: dig_gain_s[7:0]
0x5016~ 0x5018	RSVD	–	–	Reserved
0x5019	ISP CTRL19	0x04	R/W	Bit[3:0]: mwb_r_gain_man_l[11:8]
0x501A	ISP CTRL1a	0x00	R/W	Bit[7:0]: mwb_r_gain_man_l[7:0]
0x501B	ISP CTRL1b	0x04	R/W	Bit[3:0]: mwb_g_gain_man_l[11:8]
0x501C	ISP CTRL1c	0x00	R/W	Bit[7:0]: mwb_g_gain_man_l[7:0]
0x501D	ISP CTRL1d	0x04	R/W	Bit[3:0]: mwb_b_gain_man_l[11:8]
0x501E	ISP CTRL1e	0x00	R/W	Bit[7:0]: mwb_b_gain_man_l[7:0]
0x501F	ISP CTRL1f	0x04	R/W	Bit[3:0]: mwb_r_gain_man_s[11:8]
0x5020	ISP CTRL20	0x00	R/W	Bit[7:0]: mwb_r_gain_man_s[7:0]
0x5021	ISP CTRL21	0x4	R/W	Bit[3:0]: mwb_g_gain_man_s[11:8]
0x5022	ISP CTRL22	0x00	R/W	Bit[7:0]: mwb_g_gain_man_s[7:0]

Confidential for Sida

table 5-19 ISP control registers (sheet 2 of 2)

address	register name	default value	R/W	description
0x5023	ISP CTRL23	0x04	R/W	Bit[3:0]: mwb_b_gain_man_s[11:8]
0x5024	ISP CTRL24	0x00	R/W	Bit[7:0]: mwb_b_gain_man_s[7:0]
0x5025~ 0x5030	RSVD	–	–	Reserved

5.20 DPC long exposure control [0x5780 - 0x57B2]

table 5-20 DPC long exposure control registers (sheet 1 of 2)

address	register name	default value	R/W	description
0x5780	DPC_CTRL0	0x14	RW	Bit[7:6]: Reserved Bit[5]: Tail enable Bit[4]: Saturate cross-cluster enable Bit[3]: 3x3 cluster enable Bit[2]: Cross-cluster enable Bit[1]: General tail enable Bit[0]: Manual mode enable
0x5781	DPC_CTRL1	0x0F	RW	Bit[7:4]: Saturate Bit[3]: Different channel white pixel connection enable Bit[2]: Different channel black pixel connection enable Bit[1]: Same channel white pixel connection enable Bit[0]: Same channel black pixel connection enable
0x5782	DPC_CTRL2	0x44	RW	Bit[7:4]: Status threshold step Bit[3:0]: White threshold list0
0x5783	DPC_CTRL3	0x02	RW	Bit[7:4]: Reserved Bit[3:0]: White threshold list1
0x5784	DPC_CTRL4	0x01	RW	Bit[7:4]: Reserved Bit[3:0]: White threshold list2
0x5785	DPC_CTRL5	0x01	RW	Bit[7:4]: Reserved Bit[3:0]: White threshold list3
0x5786	DPC_CTRL6	0x00	RW	Bit[7:4]: Reserved Bit[3:0]: Adaptive pattern thresholds
0x5787	DPC_CTRL7	0x04	RW	Bit[7:4]: Reserved Bit[3:0]: Adaptive pattern step

Confidential for Sida

table 5-20 DPC long exposure control registers (sheet 2 of 2)

address	register name	default value	R/W	description
0x5788	DPC_CTRL8	0x08	RW	Bit[7:4]: Reserved Bit[3:0]: More connection case thresholds
0x5789	DPC_CTRL9	0x0F	RW	Bit[7:0]: DPC level list0
0x578A	DPC_CTRL10	0xFD	RW	Bit[7:0]: DPC level list1
0x578B	DPC_CTRL11	0xF5	RW	Bit[7:0]: DPC level list2
0x578C	DPC_CTRL12	0xF5	RW	Bit[7:0]: DPC level list3
0x578D	DPC_CTRL13	0x03	RW	Bit[7]: Reserved Bit[6:0]: Gain list0
0x578E	DPC_CTRL14	0x0F	RW	Bit[7]: Reserved Bit[6:0]: Gain list1
0x578F	DPC_CTRL15	0x3F	RW	Bit[7]: Reserved Bit[6:0]: Gain list2
0x5790	DPC_CTRL16	0x08	RW	Bit[7:4]: Reserved Bit[3:0]: Matching thresholds
0x5791	DPC_CTRL17	0x04	RW	Bit[7:4]: Reserved Bit[3:0]: Status thresholds
0x5792	DPC_CTRL18	0x04	RW	Bit[7:4]: Reserved Bit[3:0]: Threshold ratio
0x5793	DPC_CTRL19	0x52	RW	Bit[7:6]: vnum_list1 Bit[5:4]: vnum_list0 Bit[1]: Reserved Bit[0]: Clip interpolate G enable
0x5794	DPC_CTRL20	0xA3	RW	Bit[7:6]: vnum_list3 Bit[5:4]: vnum_list2 Bit[1:0]: Edge option
0x5795~ 0x57B2	RSVD	–	–	Reserved

Confidential for Sida

5.21 DPC short exposure control [0x5800 - 0x5815, 0x582C - 0x5832]

table 5-21 DPC short exposure control registers (sheet 1 of 2)

address	register name	default value	R/W	description
0x5800	DPC_CTRL0	0x14	RW	Bit[7:6]: Reserved Bit[5]: Tail enable Bit[4]: Saturate cross-cluster enable Bit[3]: 3x3 cluster enable Bit[2]: Cross-cluster enable Bit[1]: General tail enable Bit[0]: Manual mode enable
0x5801	DPC_CTRL1	0x0F	RW	Bit[7:4]: Saturate Bit[3]: Different channel white pixel connection enable Bit[2]: Different channel black pixel connection enable Bit[1]: Same channel white pixel connection enable Bit[0]: Same channel black pixel connection enable
0x5802	DPC_CTRL2	0x44	RW	Bit[7:4]: status threshold step Bit[3:0]: White threshold list0
0x5803	DPC_CTRL3	0x02	RW	Bit[7:4]: Reserved Bit[3:0]: White threshold list1
0x5804	DPC_CTRL4	0x01	RW	Bit[7:4]: Reserved Bit[3:0]: White threshold list2
0x5805	DPC_CTRL5	0x01	RW	Bit[7:4]: Reserved Bit[3:0]: White threshold list3
0x5806	DPC_CTRL6	0x00	RW	Bit[7:4]: Reserved Bit[3:0]: Adaptive pattern thresholds
0x5807	DPC_CTRL7	0x04	RW	Bit[7:4]: Reserved Bit[3:0]: Adaptive pattern step
0x5808	DPC_CTRL8	0x08	RW	Bit[7:4]: Reserved Bit[3:0]: More connection case thresholds
0x5809	DPC_CTRL9	0x0F	RW	Bit[7:0]: dpc level list0
0x580A	DPC_CTRL10	0xFD	RW	Bit[7:0]: dpc level list1
0x580B	DPC_CTRL11	0xF5	RW	Bit[7:0]: dpc level list2
0x580C	DPC_CTRL12	0xF5	RW	Bit[7:0]: dpc level list3
0x580D	DPC_CTRL13	0x03	RW	Bit[7]: Reserved Bit[6:0]: gain list0

Confidential for Sida

table 5-21 DPC short exposure control registers (sheet 2 of 2)

address	register name	default value	R/W	description
0x580E	DPC_CTRL14	0x0F	RW	Bit[7]: Reserved Bit[6:0]: gain list1
0x580F	DPC_CTRL15	0x3F	RW	Bit[7]: Reserved Bit[6:0]: gain list2
0x5810	DPC_CTRL16	0x08	RW	Bit[7:4]: Reserved Bit[3:0]: Matching thresholds
0x5811	DPC_CTRL17	0x04	RW	Bit[7:4]: Reserved Bit[3:0]: Status thresholds
0x5812	DPC_CTRL18	0x04	RW	Bit[7:4]: Reserved Bit[3:0]: Threshold ratio
0x5813	DPC_CTRL19	0x52	RW	Bit[7:6]: vnum_list1 Bit[5:4]: vnum_list0 Bit[1]: Reserved Bit[0]: Clip interpolate G enable
0x5814	DPC_CTRL20	0xA3	RW	Bit[7:6]: vnum_list3 Bit[5:4]: vnum_list2 Bit[1:0]: Edge option
0x5815	DPC_CTRL21	0x12	RW	Bit[4]: pd_pixel_en
0x582C	DPC_CTRL23	–	R	Bit[7]: Reserved Bit[6:0]: Black thresholds
0x582D	DPC_CTRL24	–	R	Bit[7:5]: Reserved Bit[4:0]: White thresholds
0x582E	DPC_CTRL25	–	R	Bit[7:5]: Reserved Bit[4:0]: Threshold 1
0x582F	DPC_CTRL26	–	R	Bit[7:6]: Reserved Bit[5:0]: Threshold 2
0x5830~ 0x5832	RSVD	–	–	Reserved

Confidential for Sida

5.22 OTP control [0x5B0D - 0x5B10 - 0x5B17, 0x5B23]

table 5-22 OTP control registers (sheet 1 of 2)

address	register name	default value	R/W	description
0x5B00	OTP CTRL00	0x00	RW	Bit[7:2]: Reserved Bit[1:0]: Memory start address[9:8]
0x5B01	OTP CTRL01	0x00	RW	Bit[7:0]: Memory start address[7:0]
0x5B02	OTP CTRL02	0x01	RW	Bit[7:2]: Reserved Bit[1:0]: Memory end address[9:8]
0x5B03	OTP CTRL03	0xFF	RW	Bit[7:0]: Memory end address[7:0]
0x5B04	OTP CTRL04	0x42	RW	Bit[7]: Select xy_end signal for debug 0: xy_end keep 0 1: xy_end keep 1 after last cluster is read out Bit[6]: VSYNC reset enable for debug 0: Do not use VSYNC to reset 3 enable signals 1: Use VSYNC to reset 3 enable signals to fix a bug Bit[5]: Threshold function enable 0: Disable recover threshold in register 0x5B09 (can recover black cluster) 1: Enable recover threshold in register 0x5B09 (can not recover black cluster) Bit[4]: Manual increase step enable Bit[3]: Disable mirror and flip Bit[2]: Disable OTP offset Bit[1]: Mirror option enable Bit[0]: Disable binning mode
0x5B05	OTP CTRL05	0x6C	RW	Bit[7]: Reserved Bit[6:5]: Recover method select 00: Left 1 neighbor pixel (on same channel) 01: Minimum of left 2 neighbor pixels 10: Average of left and right 1 neighbor pixel 11: Maximum between the minimum of left 2 neighbor pixels and the minimum of right 2 neighbor pixels Bit[4]: Use fixed pattern to recover cluster Bit[3]: Fixed pattern mode 0: Use 0x00 to recover cluster 1: Use 0x3FF to recover cluster Bit[2]: Flip option enable Bit[1]: Sensor exposure constrain enable Bit[0]: Sensor gain constrain enable

Confidential for Sida

table 5-22 OTP control registers (sheet 2 of 2)

address	register name	default value	R/W	description
0x5B06	OTP CTRL06	0x00	RW	Bit[7]: Reserved Bit[6:5]: Constrain exposure threshold[9:8] Bit[4:0]: Reserved
0x5B07	OTP CTRL07	0x00	RW	Bit[7:0]: Constrain exposure threshold[7:0] Disable OTP function when the sensor exposure is smaller than the constrain exposure threshold
0x5B08	OTP CTRL08	0x07	RW	Bit[7:6]: Reserved Bit[5:0]: Constrain gain threshold Disable OTP function when sensor gain is smaller than constrain gain threshold
0x5B09	OTP CTRL09	0x08	RW	Bit[7:4]: Reserved Bit[3:0]: Recover threshold Recover when high 8-bits of recovered data is bigger than original one by this threshold
0x5B0A	OTP CTRL0A	0x01	RW	Bit[7:5]: Reserved Bit[4:0]: Manual horizontal even increase step
0x5B0B	OTP CTRL0B	0x01	RW	Bit[7:5]: Reserved Bit[4:0]: Manual horizontal odd increase step
0x5B0C	OTP CTRL0C	0x01	RW	Bit[7:5]: Reserved Bit[4:0]: Manual vertical even increase step
0x5B0D	OTP CTRL0D	0x01	RW	Bit[7:5]: Reserved Bit[4:0]: Manual vertical odd increase step
0x5B10	OTP RO10	–	R	Bit[7:4]: Reserved Bit[3:0]: Horizontal offset[11:8]
0x5B11	OTP RO11	–	R	Bit[7:0]: Horizontal offset[7:0]
0x5B12	OTP RO12	–	R	Bit[7:4]: Reserved Bit[3:0]: Vertical offset[11:8]
0x5B13	OTP RO13	–	R	Bit[7:0]: Vertical offset[7:0]
0x5B14	OTP RO14	–	R	Bit[7:5]: Reserved Bit[4:0]: Horizontal even increase step
0x5B15	OTP RO15	–	R	Bit[7:5]: Reserved Bit[4:0]: Horizontal odd increase step
0x5B16	OTP RO16	–	R	Bit[7:5]: Reserved Bit[4:0]: Vertical even increase step
0x5B17	OTP RO17	–	R	Bit[7:5]: Reserved Bit[4:0]: Vertical odd increase step
0x5B23	OTP CTRL23	0x00	RW	Bit[7:0]: Manual Y offset[7:0]

Confidential for Sida

Confidential for Sida

6 operating specifications

6.1 absolute maximum ratings

table 6-1 absolute maximum ratings

parameter		absolute maximum rating[a]
ambient storage temperature		-40°C to +125°C
supply voltage (with respect to ground)	V_{DD-A}	4.5V
	V_{DD-D}	3V
	V_{DD-IO}	4.5V
electro-static discharge (ESD)	human body model	2000V
	machine model	200V
all input/output voltages (with respect to ground)		-0.3V to V_{DD-IO} + 1V
I/O current on any input or output pin		± 200 mA

a. exceeding the absolute maximum ratings shown above invalidates all AC and DC electrical specifications and may result in permanent damage to the device. Exposure to absolute maximum rated conditions for extended periods may affect device reliability.

6.2 functional temperature

table 6-2 functional temperature

parameter	range
operating temperature (for applications up to 30 fps)[a]	-30°C to +70°C junction temperature
stable image temperature[b]	-20°C to +60°C junction temperature

a. sensor functions but image quality may be noticeably different at temperatures outside of stable image range

b. image quality remains stable throughout this temperature range

Confidential for SDA

6.3 DC characteristics

table 6-3 DC characteristics (-30°C < T_J < 70°C)

symbol	parameter	min	typ	max[a]	unit
supply					
V_{DD-A}	supply voltage (analog)	2.7	2.8	3.0	V
V_{DD-D}	supply voltage (digital core for 2-lane MIPI up to 1000 Mbps/lane)	1.14	1.2	1.26	V
V_{DD-IO}	supply voltage (digital I/O)	1.7	1.8	1.9	V
I_{DD-A}	active (operating) current[b]		TBD	TBD	mA
I_{DD-IO}			TBD	TBD	mA
I_{DD-D}			TBD	TBD	mA
$I_{DDS-SCCB}$	standby current[c]		TBD	TBD	µA
$I_{DDS-PWDN}$			TBD	TBD	µA
$I_{DDS-XSHUTDN}$			TBD	TBD	µA
digital inputs (typical conditions: AVDD = 2.8V, DVDD = 1.2V, DOVDD = 1.8V)					
V_{IL}	input voltage LOW			0.54	V
V_{IH}	input voltage HIGH	1.26			V
C_{IN}	input capacitor			10	pF
digital outputs (standard loading 25 pF)					
V_{OH}	output voltage HIGH	1.62			V
V_{OL}	output voltage LOW			0.18	V
serial interface inputs					
V_{IL}[d]	SCL and SDA	-0.5	0	0.54	V
V_{IH}	SCL and SDA	1.28	1.8	3.0	V

a. maximum active current is measured under typical supply voltage

b. DVDD is provided by the external regulator. DVDD and EVDD are tied together. DOVDD = 1.8V

c. standby current is measured at room temperature with external clock off

d. based on DOVDD = 1.8V

Confidential for Sida

6.4 timing characteristics

table 6-4 timing characteristics

symbol	parameter	min	typ	max	unit
oscillator and clock input					
f_{OSC}	frequency (XVCLK)	6	24	27	MHz
t_r, t_f	clock input rise/fall time			(see footnote [a])	ns
	clock input duty cycle	45	50	55	%

a. for clock input rise/fall time, max is 27% of whole clock period

Confidential for Sida

Confidential for Sida

7 mechanical specifications

7.1 COB physical specifications

figure 7-1 COB die specifications

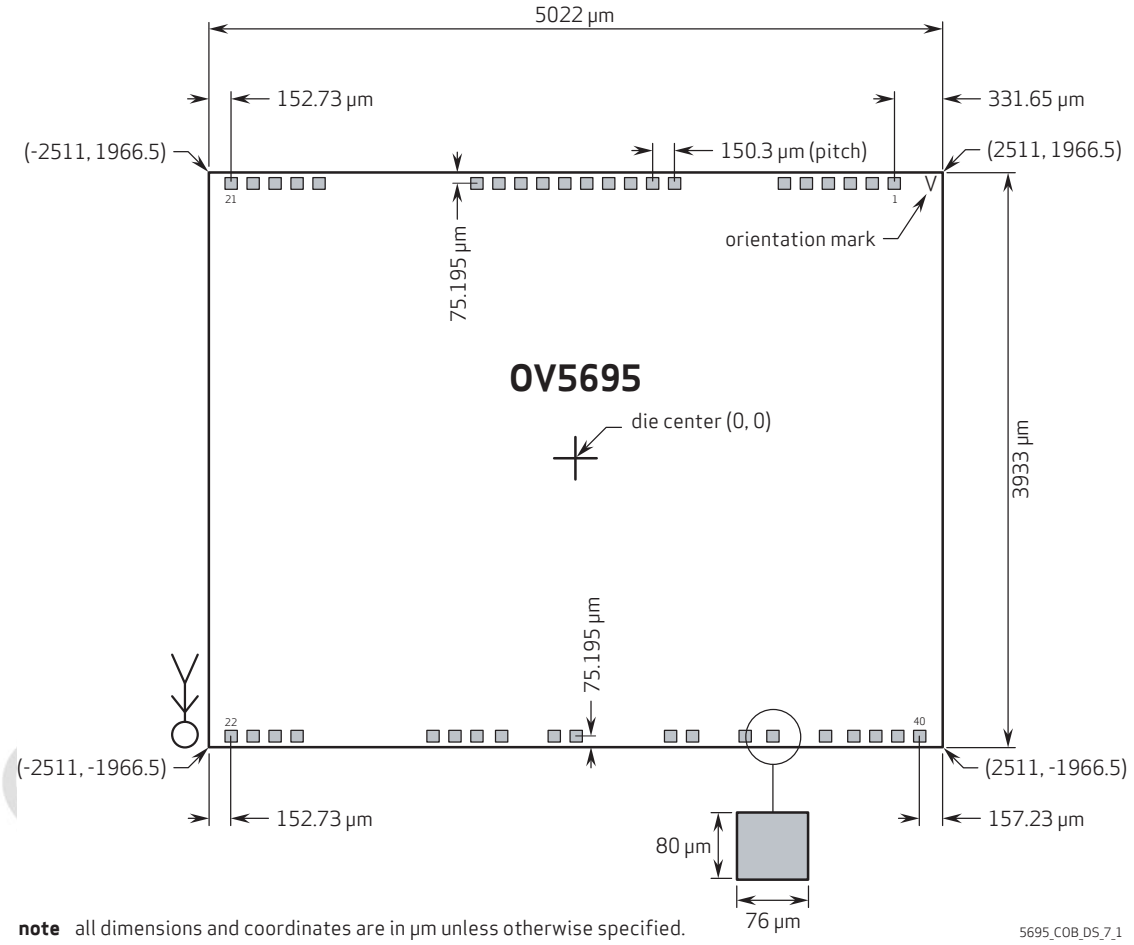

note all dimensions and coordinates are in µm unless otherwise specified.

table 7-1 pad location coordinates (sheet 1 of 2)

pad number	pad name	x coordinate	y coordinate
1	DVDD	2179.35	1891.305
2	DVDD	2029.05	1891.305
3	DOGND	1878.75	1891.305
4	DOGND	1728.45	1891.305
5	AGND	1578.15	1891.305
6	AVDD	1427.85	1891.305
7	DVDD	676.35	1891.305
8	SDA	526.05	1891.305
9	SCL	375.75	1891.305
10	FSIN/VSYNC	225.45	1891.305
11	DOGND	75.15	1891.305
12	XSHUTDN	-75.15	1891.305
13	SID	-225.45	1891.305
14	DOVDD	-375.75	1891.305
15	DVDD	-526.05	1891.305
16	TM	-676.35	1891.305
17	VN	-1757.07	1891.305
18	DVDD	-1907.37	1891.305
19	DOGND	-2057.67	1891.305
20	AVDD	-2207.97	1891.305
21	AGND	-2358.27	1891.305
22	AGND	-2358.27	-1891.305
23	AVDD	-2207.97	-1891.305
24	DOGND	-2057.67	-1891.305
25	VH	-1907.37	-1891.305
26	DOVDD	-976.95	-1891.305
27	XVCLK	-826.65	-1891.305
28	DOGND	-676.35	-1891.305
29	MDP0	-507.321	-1891.305
30	MDN0	-147.321	-1891.305

Confidential for Sida

table 7-1 pad location coordinates (sheet 2 of 2)

pad number	pad name	x coordinate	y coordinate
31	EVDD	2.979	-1891.305
32	DOGND	648.981	-1891.305
33	MCP	799.281	-1891.305
34	MCN	1159.281	-1891.305
35	MDP1	1349.28	-1891.305
36	MDN1	1709.28	-1891.305
37	DOGND	1902.87	-1891.305
38	DOGND	2053.17	-1891.305
39	DVDD	2203.47	-1891.305
40	DVDD	2353.77	-1891.305

Confidential for Sida

7.2 reconstructed wafer (RW) physical specifications

- maximum total die count: 1195
- film frame: Compact Disco Stainless SUS420
- carrier tape: UV tape

note
Actual die count varies and the absent die may be less than 10% of the maximum total die count (excluding the last frame of the wafer lot).

table 7-2 RW physical dimensions

feature	dimensions
RW physical dimensions	8" RW on 12 frame
wafer thickness (OVXXXXX-ABCD)	
C=4	200 µm ± 10 µm (7.9 mil ± 0.4 mil)
reconstructed wafer street width	300 µm ± 50 µm (11.8 mil ± 2 mil)
placement accuracy x, y, theta	± 50 µm (± 2 mil), <1.0 degree
singulated die size	
width	5072 µm ± 20 µm (199.7 mil ± 0.8 mil)
length	3983 µm ± 20 µm (156.8 mil ± 0.8 mil)
bond pad size	84 µm × 80 µm (3.3 mil × 3.1 mil)
minimum bond pad pitch	150.3 µm (5.9 mil)
bond pad opening	80 µm × 76 µm (3.1 mil × 3.0 mil)
optical array	
die center	(0, 0)
optical center from die center[a]	-259.2 µm, -229.5 µm (--10.20 mil, -9.03 mil)

a. based on die orientation on frame with notch facing down position

Confidential for Sida

figure 7-2 OV5695 RW physical diagram

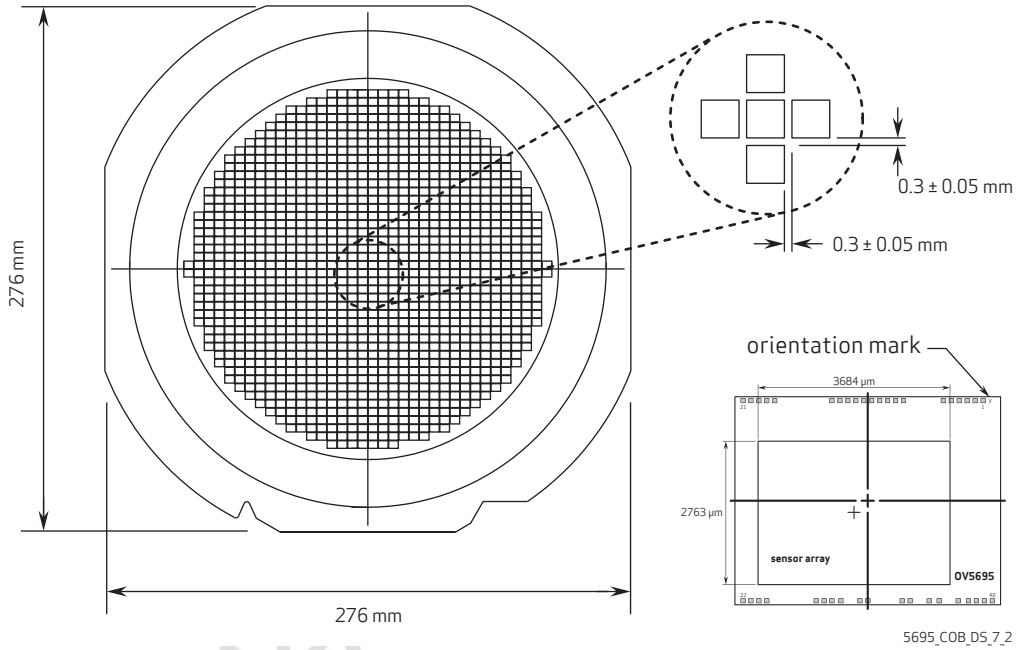

Confide
Sida

Confidential for Sida

8 optical specifications

8.1 sensor array center

figure 8-1 sensor array center

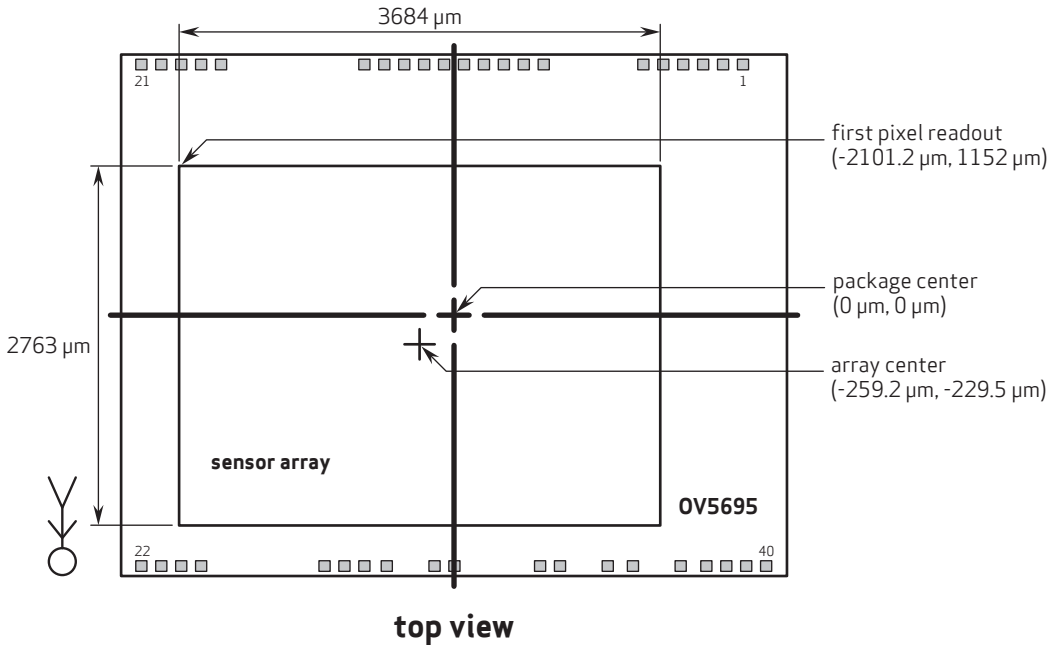

note 1 this drawing is not to scale and is for reference only.

note 2 as most optical assemblies invert and mirror the image, the chip is typically mounted with pad 1 oriented down on the PCB.

5695_COB_DS_8_1

Sida

8.2 lens chief ray angle (CRA)

figure 8-2 chief ray angle (CRA)

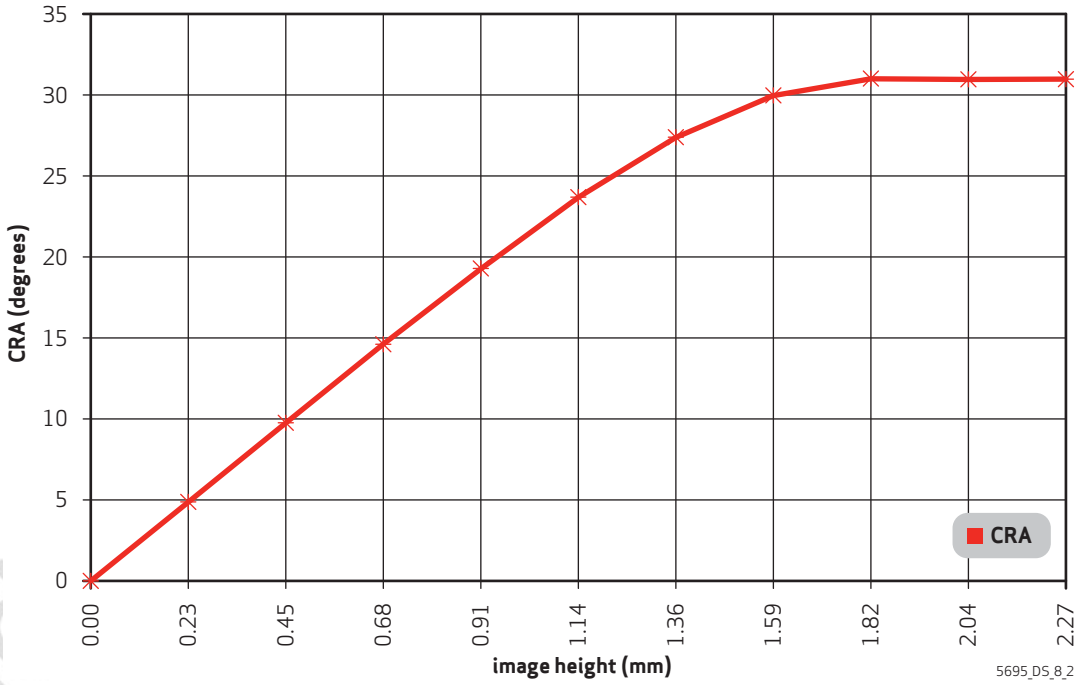

table 8-1 CRA versus image height plot

field (%)	image height (mm)	CRA (degrees)
0.00	0.00	0.00
0.10	0.23	4.92
0.20	0.45	9.75
0.30	0.68	14.57
0.40	0.91	19.3
0.50	1.14	23.68
0.60	1.36	27.44
0.70	1.59	30.07
0.80	1.82	31.08
0.90	2.04	31.01
1.00	2.27	31.01

Confi
Sida

appendix A handling of RW devices

A.1 ESD /EOS prevention

1. Ensure that there is 500V ESD control in all work areas.
2. Use ESD safety shoes, ground strap, and static control smocks in test areas.
3. Use grounded work carts and tables in inspection areas.
4. OmniVision recommends the use of ionized air in all work areas.

A.2 particles and cleanliness of environment

1. All production, inspection and packaging areas should meet Class10 environment requirements.
2. Use optical microscopes with 50X and 100X magnifications for particle inspection.
3. Ensure that there is good cassette sealing for particle protection during storage.
4. OmniVision recommends water cleaning to remove removable particles.
5. RW die should be stored in nitrogen gas purged cabinets with temperature less than 30°C and relative humidity of 60% before assembly.

A.3 other requirements

1. Reliability assurance of RW or COB bare die is certified by product reliability of the bare die in a CLCC, CSP or QFP package form factor. Precautions should be taken if the packaging form factor of the bare die is other than these specified.
2. Avoid exposure to strong sunlight for extended periods of time as the color filter of the image sensor may become discolored.
3. Avoid direct exposure of the sensor bare die to high temperature and/or humidity environment as sensor characteristics will be affected. Extra precautions should be exercised if the bare die experiences temperatures exceeding 260°C for more than 75 seconds.

Confidential for Sida

Confidential for Sida

revision history

version 1.0 07.02.2015

- initial release

version 1.01 09.02.2015

- in key specifications, updated analog power supply specifications from 2.6 to 3.0V (2.8V nominal) to 2.7 to 3.0V (2.8V nominal) and core power supply specifications from 1.1 to 1.3V (1.2V nominal) to 1.14 to 1.26V (1.2V nominal)
- in table 6-3, changed min value for V_{DD-A} from 2.6V to 2.7V and min and max values for V_{DD-D} from 1.1V and 1.3V to 1.14V and 1.26V, respectively

Confidential for Sida

Confidential for Sida

defining the future of digital imaging™

OmniVision Technologies, Inc.

UNITED STATES

4275 Burton Drive
Santa Clara, CA 95054

tel: +1 408 567 3000

fax: +1 408 567 3001

email: sales@ovt.com

UNITED KINGDOM

Hook, Hampshire +44 1256 744 610

GERMANY

Munich +49 89 63 81 99 88

INDIA

Bangalore +91 80 4112 8966

CHINA

Beijing + 86 10 6580 1690

Shanghai + 86 21 6175 9888

+86 21 5774 9288

Shenzhen + 86 755 8384 9733

JAPAN

Yokohama +81 45 478 7977

Osaka +81 6 4964 2606

KOREA

Seoul + 82 2 3472 3769

SINGAPORE +65 6933 1933

TAIWAN

Taipei +886 2 2657 9800

Hsin-chu +886 3 5656688

website: **www.ovt.com**