USB WIFI+BT

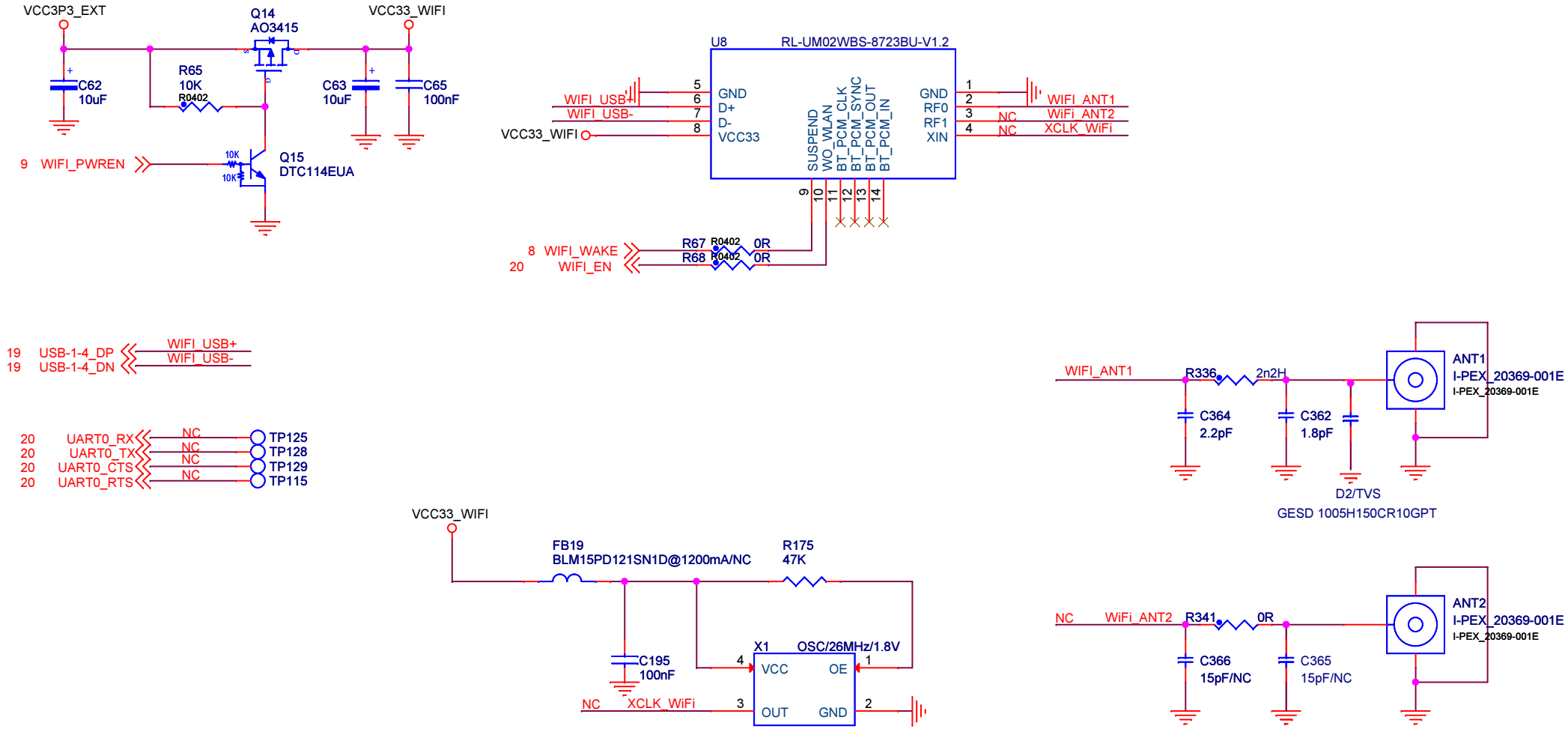

HK NATER TECH LIMITED		
Drawing Title: RL-UM02WBS-8723BU		
Page Title: USB WiFi+BT4.0		
Size A4	Document Number RL-UM02WBS-8723BU	Rev 1.0
Date: Thursday, July 11, 2015	Sheet 11 of 21	