MainBoard Schematics For RK3588

TB-RK3588_MainBoard

Main Functions Introduction

1) PMIC: 1xRK806-1+DiscretePower
2) RAM: 2xLPDDR4/4X_32bit
3) ROM: eMMC5.1(Default)
4) Support:
5) Support: 1 x USB3.0 HOST + 1 x TYPEC3.0+ 2 x USB20 HOST
6) Support: 1 x SATA3.0 Connector (7pin) + 4 pin Power Connector
7) Support: 1 x 2Lane PCIe3.0 Connector (Dual Mode)
8) Support: 2 x 2Lanes MIPI DPHY RX Camera(Need daughter Board)
9) Support: 2 x 4Lanes MIPI DCPHY RX Camera(Need daughter Board)
10) Support: 2 x HDMI2.0 TX
11) Support: 1 x HDMI2.0 RX
12) Support: 2 x 4Lanes MIPI DHY-TX
13) Support: a/b/g/n/ac/ax 2T2R WIFI 6+BT5.0(PCIE)
14) Support: 1x 10/100/1000 RJ45 Port(RGMII)
15) Support: 1x 10/100/1000 RJ45 Port(PCIE)
16) Support: 1xHeadphone+2xSPK+1xAnalog MIC
17) Support: 1xRecovery(VOL+)+1xReset+1xPower on+1xMenu+1xVOL-+1xESC
18) Support: 8 x SARADC
19) Support: Debug UART to USB connector and JTAG Connector

Rockchip Confidential

Rockchip	Rockchip Electronics Co., Ltd				
Project:	TB-RK3588B0				
File:	00.Cover Page				
Date:	Tuesday, February 28, 2023			Rev:	V1.0
Designed by:	DJ	Reviewed by:		Sheet:	0 of 0

Table of Content

Page 1	00.Cover Page
Page 2	01.Index and Notes
Page 3	02.Revision History
Page 4	03.Block Diagram
Page 5	04.System Power Map
Page 6	05.Power Sequence/IO Power
Page 7	06.Lower-Speed Bus Map
Page 8	07.USB Controller Configure Table
Page 9	08.PCIE Fun Map
Page 10	
Page 11	
Page 12	
Page 13	
Page 14	
Page 15	
Page 16	
Page 17	
Page 18	
Page 19	
Page 20	20.Power_DC IN
Page 21	21.Other_Power/RTC
Page 22	
Page 23	
Page 24	25.USB20/USB30 Port
Page 25	26.Type-C Port
Page 26	
Page 27	
Page 28	
Page 29	46.VI-Camera_D/C PHY_RX
Page 30	47.VI-Camera_MIPI_CSI
Page 31	48.VI-HDMI2.0 RX
Page 32	50.VO-HDMI2.1 TX
Page 33	
Page 34	55.VO-LCM_MIPI
Page 35	63.WIFI/BT-PCIE_2T2R(AP6275PR3)
Page 36	67.Ethernet-GEPHY_RGMII0
Page 37	68.Pcie to RJ45(RTL8111HS)
Page 38	70.Audio Codec_ES8388
Page 39	81.PCIE-Pcie30_Slot
Page 40	83.SATA-SATA3.0 Slot_7P
Page 41	90.Led
Page 42	92.KEY Array
Page 43	93.Debug Uart/Jtag Port
Page 44	98.Power Test-ADC
Page 45	99.Mark/Hole/Heatsink

Generate Bill of Materials

Header:

Item\tPart\tDescription\tPCB Footprint\tReference\tQuantity\tOption

Combined property string:

{Item}\t{Value}\t{Description}\t{PCB Footprint}\t{Reference}\t{Quantity}\t{Option}

Description

Note

Option

Notes

NOTE 1:
Component parameter description
1. DNP stands for component not mounted temporarily
2. If Value or option is DNP, which means the area is reserved without being mounted

NOTE 2:
Please use our recommended components to avoid too many changes.
For more informations about the second source,please refer to our AVL.

Rockchip Confidential

Rockchip	Rockchip Electronics Co., Ltd				
Project:	TB-RK3588B0				
File:	01.Index and Notes				
Date:	Tuesday, February 28, 2023			Rev:	V1.0
Designed by:	DJ	Reviewed by:		Sheet:	0 of 0

Revision History

Version	Date	By	Change Dsecription	Approved
V1.0	2021-11-23	DJ	1:Revision preliminary version	
V1.1	2021-12-14	DJ	1:page46 增加R4600，R4601上拉到3.3V 2.page47 对调MIPI_CSI0_RX_D2N/P与MIPI_CSI0_RX_D1N/P 3. page70 增加R7020.R7022上拉到1V8 codec 4. U9301/U9302更改为um3204QS，注意管脚与layout封装对应 5. 增加1个螺柱定位孔，并更改6个螺柱定位通孔，内径尺寸4R2； 6. 增加R5026，C5003 for HDMI edid fail issue 7. 修改R5025为10k，bom修改 8. GMAC TXCLK增加C6730 3pF电容到地 9. 修改R2680为4.7K，防止反灌 10. 修改电源LED为VCC4V0_SYS供电 11.修改R2600，R2601为100K，BOM 12. delete R9340/R9341 & GND GATE 13. Add Toybrick二维码	
V2.0	2021-12-14	DJ	1:page81 保留PI6C557相关电路,增加AU5246相关电路---双laytout 2.page70 修正VCC1V8_CODEC给pin2供电 3.增加考虑风扇定位孔设计----待确认风扇设计 4.page93 CAN芯片增加VIO到1.8V供电与电平转换 5.修改底板尺寸为3.5寸工业标准规格 6.修改AP6275PR3为AP6275P，删掉pin48 BT天线相关电路 7.page47修改I2C5_XXX_M0_MIPI上拉到1V8 8.增加TF card兼容电路 9.增加s2000机械开关,S2003 10.u3和sata同时工作供电不足,外设电源改NB679设计 11.修改部分阻容感封装 12.wifi模块供电时序修改，增加1V8电源开关 13.page2 & page6 修改 14.GPIO增加esd设计 15.sd_det兼容IO设计，后续计划核心板det引出取代. 16. mp8759增加一个GPIO1_B1兼容控制PFM mode	
V2.1	2023-02-28	DJ	1:增加预留电压检测电路，R9549/R9550不贴 2.TF卡预留设计，增加贴R2025/R2613，不贴R9104/R9106 3.PCIE时钟芯片默认AU5426，并修改位号u5为u8104 4.CAN芯片DNP，默认作GPIO，增加ESD9316/9317,贴R9332/9333,不贴R9503/9506 5.修改SMTSO9901和SMTSO9906为2.8mm高螺柱 6. 修改HDMITx和HDMIRX座子为高速座 7. page81,R9516，R9517，R9520，R9521改DNP 8. 修改电阻R9557为33k，R9558为1%精度，用于区分底板版本识别	

Rockchip Confidential

Rockchip	Rockchip Electronics Co., Ltd				
Project:	TB-RK3588B0				
File:	02.Revision History				
Date:	Tuesday, February 28, 2023			Rev:	V1.0
Designed by:	DJ	Reviewed by:		Sheet:	0 of 0

RK3588 MainBoard Block Diagram

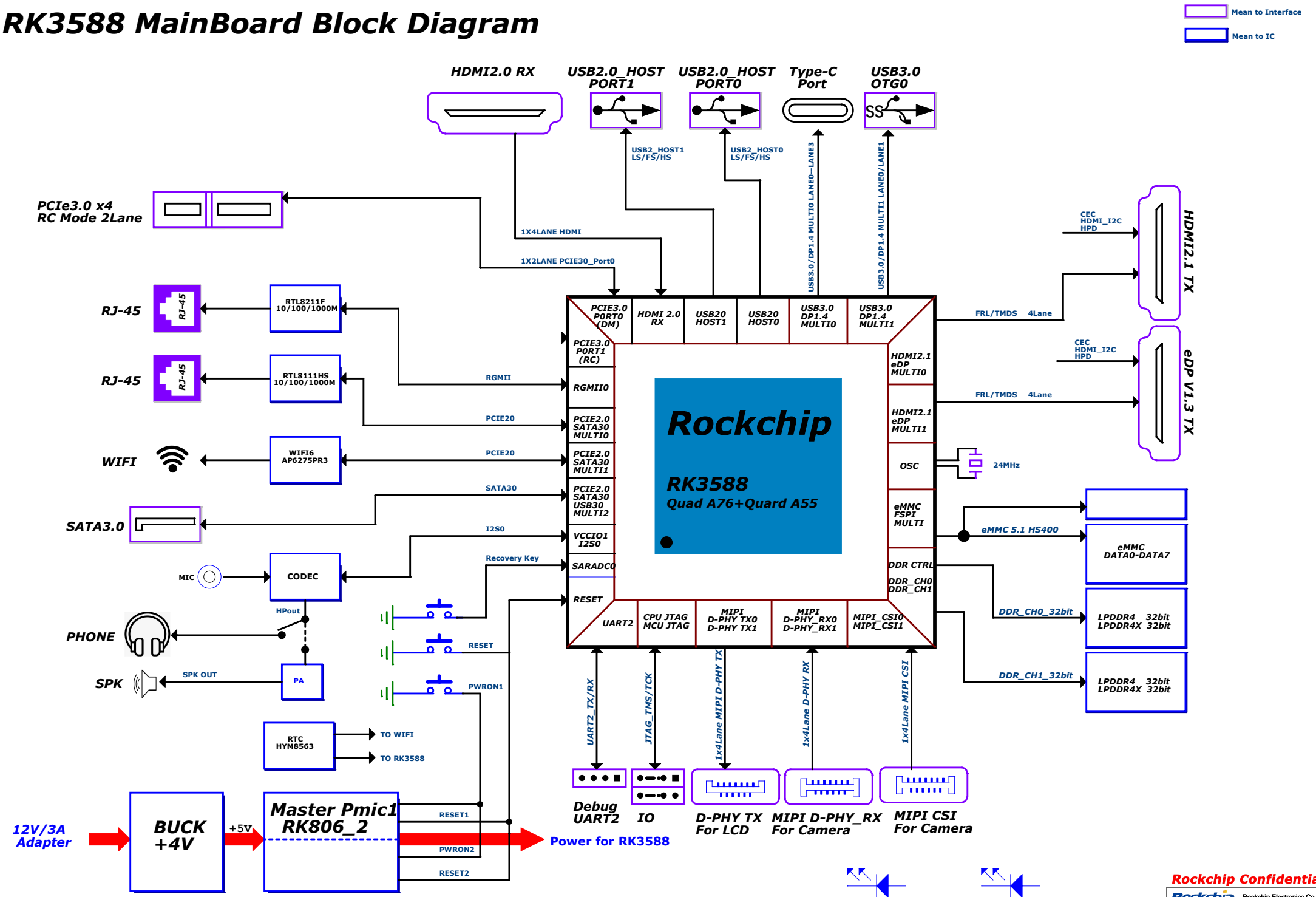

Rockchip Confidential

Rockchip Electronics Co., Ltd			
Project:	TB-RK3588B0		
File:	03.Block Diagram		
Date:	Tuesday, February 28, 2023	Rev:	V1.0
Designed by: DJ	Reviewed by: Default	Sheet:	0 of 0

Power Tree

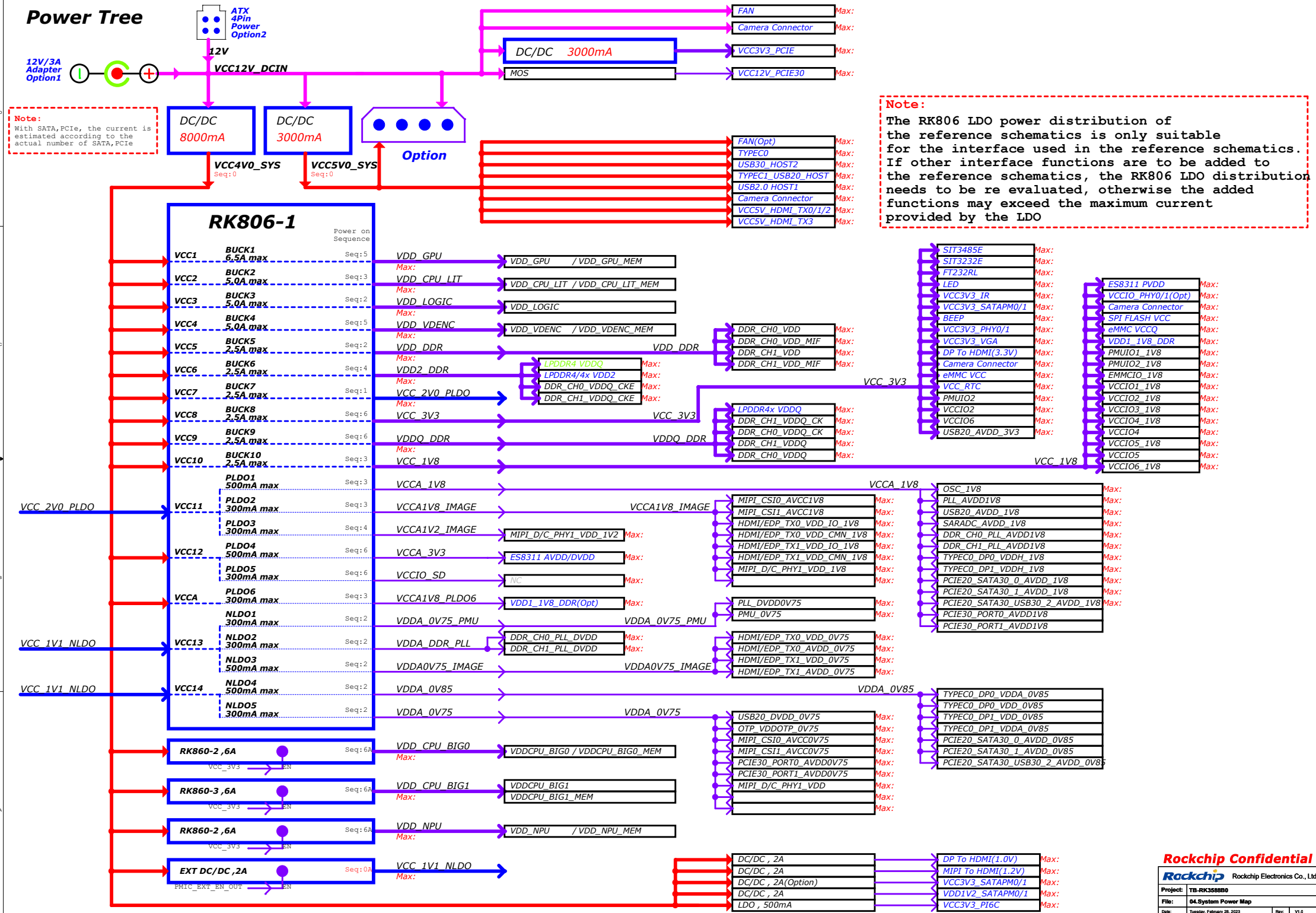

Rockchip Confidential

Rockchip	Rockchip Electronics Co., Ltd
Project:	TB-RK3588B0
File:	04.System Power Map
Date:	Tuesday, February 28, 2023
Rev:	V1.0
Designed by:	DJ
Reviewed by:	Default
Sheet:	0 of 0

Power Sequence

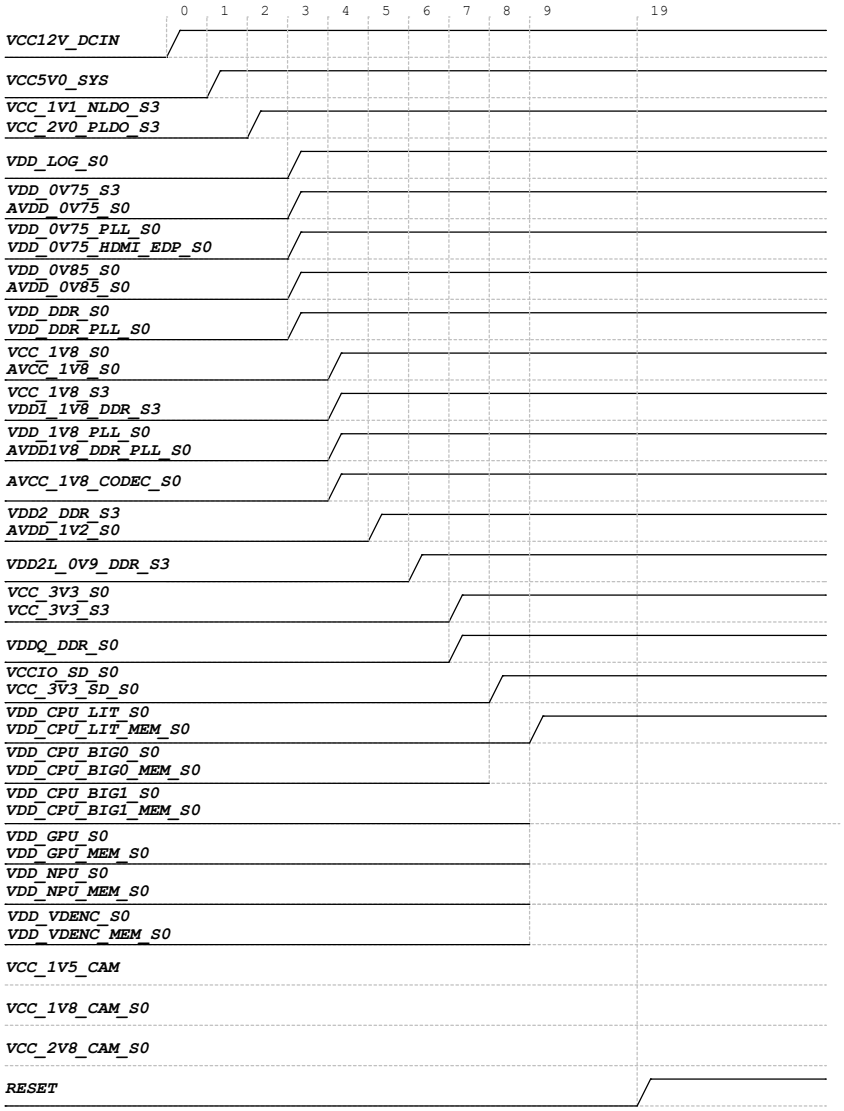

Power Supply	PMIC Channel	Supply Limit	Power Name	Time Slot	Default Voltage	Default ON/OFF	Sleep ON/OFF	Peak Current	Sleep Current
VCC5V0_SYS	PMIC1_BUCK1	6.5A	VDD_GPU_S0		0.75V	OFF	OFF	TBD	TBD
VCC5V0_SYS	PMIC1_BUCK2	5A	VDD_NPU_S0		0.75V	OFF	OFF	TBD	TBD
VCC5V0_SYS	PMIC1_BUCK3	5A	VDD_LOG_S0		0.75V	ON	OFF	TBD	TBD
VCC5V0_SYS	PMIC1_BUCK4	3A	VDD_VDENC_S0		0.75V	OFF	OFF	TBD	TBD
VCC5V0_SYS	PMIC1_BUCK5	2.5A	VDD_GPU_MEM_S0		0.75V	OFF	OFF	TBD	TBD
VCC5V0_SYS	PMIC1_BUCK6	2.5A	VDD_NPU_MEM_S0		0.75V	OFF	OFF	TBD	TBD
VCC5V0_SYS	PMIC1_BUCK7	2.5A	VCC_2V0_PLDO_S3		2.0V	ON	ON	TBD	TBD
VCC5V0_SYS	PMIC1_BUCK8	2.5A	VDD_VDENC_MEM_S0		0.75V	OFF	OFF	TBD	TBD
VCC5V0_SYS	PMIC1_BUCK9	2.5A	VDD2_DDR_S3		1.1V	ON	ON	TBD	TBD
VCC5V0_SYS	PMIC1_BUCK10	2.5A	VCC_1V1_NLDO_S3		1.1V	ON	ON	TBD	TBD
VCC_2V0_PLDO	PMIC1_PLDO1	0.3A	AVCC_1V8_S0		1.8V	ON	OFF	TBD	TBD
	PMIC1_PLDO2	0.3A	VDD1_1V8_DDR_S3		1.8V	ON	ON	TBD	TBD
	PMIC1_PLDO3	0.5A	AVCC_1V8_CODEC_S0		1.8V	ON	OFF	TBD	TBD
VCC5V0_SYS	PMIC1_PLDO4	0.5A	VCC_3V3_S3		3.3V	ON	ON	TBD	TBD
	PMIC1_PLDO5	0.3A	VCCIO_SD_S0		3.3V	ON	OFF	TBD	TBD
VCC5V0_VCCA	PMIC1_PLDO6	0.3A	VCC_1V8_S3		1.8V	ON	ON	TBD	TBD
VCC_1V1_NLDO	PMIC1_NLDO1	0.3A	VDD_0V75_S3		0.75V	ON	ON	TBD	TBD
	PMIC1_NLDO2	0.3A	VDD2L_0V9_DDR_S3		0.9V	ON	ON	TBD	TBD
	PMIC1_NLDO3	0.5A	VDD_0V75_HDMI_EDP_S0		0.75V	ON	OFF	TBD	TBD
VCC_1V1_NLDO	PMIC1_NLDO4	0.5A	AVDD_0V75_S0		0.75V	ON	OFF	TBD	TBD
	PMIC1_NLDO5	0.3A	VDD_0V85_S0		0.85V	ON	OFF	TBD	TBD
VCC5V0_SYS	PMIC2_BUCK1	6.5A	VDD_CPU_BIG1_S0		0.75V	OFF	OFF	TBD	TBD
VCC5V0_SYS	PMIC2_BUCK2	5A	VDD_CPU_BIG0_S0		0.75V	OFF	OFF	TBD	TBD
VCC5V0_SYS	PMIC2_BUCK3	5A	VDD_CPU_LIT_S0		0.75V	ON	OFF	TBD	TBD
VCC5V0_SYS	PMIC2_BUCK4	3A	VCC_3V3_S0		3.3V	ON	OFF	TBD	TBD
VCC5V0_SYS	PMIC2_BUCK5	2.5A	VDD_CPU_BIG1_MEM_S0		0.75V	OFF	OFF	TBD	TBD
VCC5V0_SYS	PMIC2_BUCK6	2.5A	VDD_CPU_BIG0_MEM_S0		0.75V	OFF	OFF	TBD	TBD
VCC5V0_SYS	PMIC2_BUCK7	2.5A	VCC_1V8_S0		1.8V	ON	OFF	TBD	TBD
VCC5V0_SYS	PMIC2_BUCK8	2.5A	VDD_CPU_LIT_MEM_S0		0.75V	ON	OFF	TBD	TBD
VCC5V0_SYS	PMIC2_BUCK9	2.5A	VDDQ_DDR_S0		0.6V	ON	OFF	TBD	TBD
VCC5V0_SYS	PMIC2_BUCK10	2.5A	VDD_DDR_S0		0.85V	ON	OFF	TBD	TBD
VCC_2V0_PLDO	PMIC2_PLDO1	0.3A	VCC_1V8_CAM_S0		0V	OFF	OFF	TBD	TBD
	PMIC2_PLDO2	0.3A	AVDD1V8_DDR_PLL_S0		1.8V	ON	OFF	TBD	TBD
	PMIC2_PLDO3	0.5A	VDD_1V8_PLL_S0		1.8V	ON	OFF	TBD	TBD
VCC5V0_SYS	PMIC2_PLDO4	0.5A	VCC_3V3_SD_S0		3.3V	ON	OFF	TBD	TBD
	PMIC2_PLDO5	0.3A	VCC_2V8_CAM_S0		0V	OFF	OFF	TBD	TBD
VCC_1V1_NLDO	PMIC2_NLDO1	0.3A	VDD_0V75_PLL_S0		0.75V	ON	OFF	TBD	TBD
	PMIC2_NLDO2	0.3A	VDD_DDR_PLL_S0		0.85V	ON	OFF	TBD	TBD
	PMIC2_NLDO3	0.5A	AVDD_0V85_S0		0.85V	ON	OFF	TBD	TBD
VCC_2V0_PLDO	PMIC2_NLDO4	0.5A	VCC_1V2_CAM_S0		0V	OFF	OFF	TBD	TBD
	PMIC2_NLDO5	0.3A	AVDD_1V2_S0		1.2V	ON	OFF	TBD	TBD

IO Power Domain Map

IO Domain	Pin Num	Support IO Voltage	Supply Power Pin Name	Power Source	Operating Voltage
PMUIO1	Pin N28	1.8V Only	PMUIO1_1V8	VCC_1V8_S3	1.8V
PMUIO2	Pin R27 Pin P28	1.8V or 3.3V	PMUIO2_1V8 PMUIO2	VCC_1V8_S3 VCC_3V3_S3	3.3V
EMMCIO	Pin V26	1.8V Only	EMMCIO_1V8	VCC_1V8_S0	1.8V
VCCIO1	Pin G20	1.8V Only	VDDIO1_1V8	VCC_1V8_S0	1.8V
VCCIO2	Pin AA7 Pin Y7	1.8V or 3.3V	VDDIO2_1V8 VCCIO2	VCC_1V8_S0 VCC_1V8/3V3_S0	1.8V/3.3V
VCCIO3	Pin Y26	1.8V Only	VDDIO3_1V8	VCC_1V8_S0	1.8V
VCCIO4	Pin H20 Pin H21	1.8V or 3.3V	VDDIO4_1V8 VCCIO4	VCC_1V8_S0 VCC_1V8_S0	1.8V
VCCIO5	Pin W25 Pin W26	1.8V or 3.3V	VDDIO5_1V8 VCCIO5	VCC_1V8_S0 VCC_1V8_S0	1.8V
VCCIO6	Pin AC25 Pin AC26	1.8V or 3.3V	VDDIO6_1V8 VCCIO6	VCC_1V8_S0 VCC_3V3_S0	3.3V

IO Type	Operating Voltage
1.8V Only	VCCIO*_1V8=1.8V
1.8V or 3.3V	VCCIO*_1V8=1.8V VCCIO*=1.8V or 3.3V

Rockchip Confidential

Rockchip Rockchip Electronics Co., Ltd

Project:	TB-RK3588B0		
File:	05.Power Sequence/IO Power		
Date:	Tuesday, February 28, 2023	Rev:	V1.0
Designed by: DJ	Reviewed by:	Sheet:	0 of 0

I2C MAP

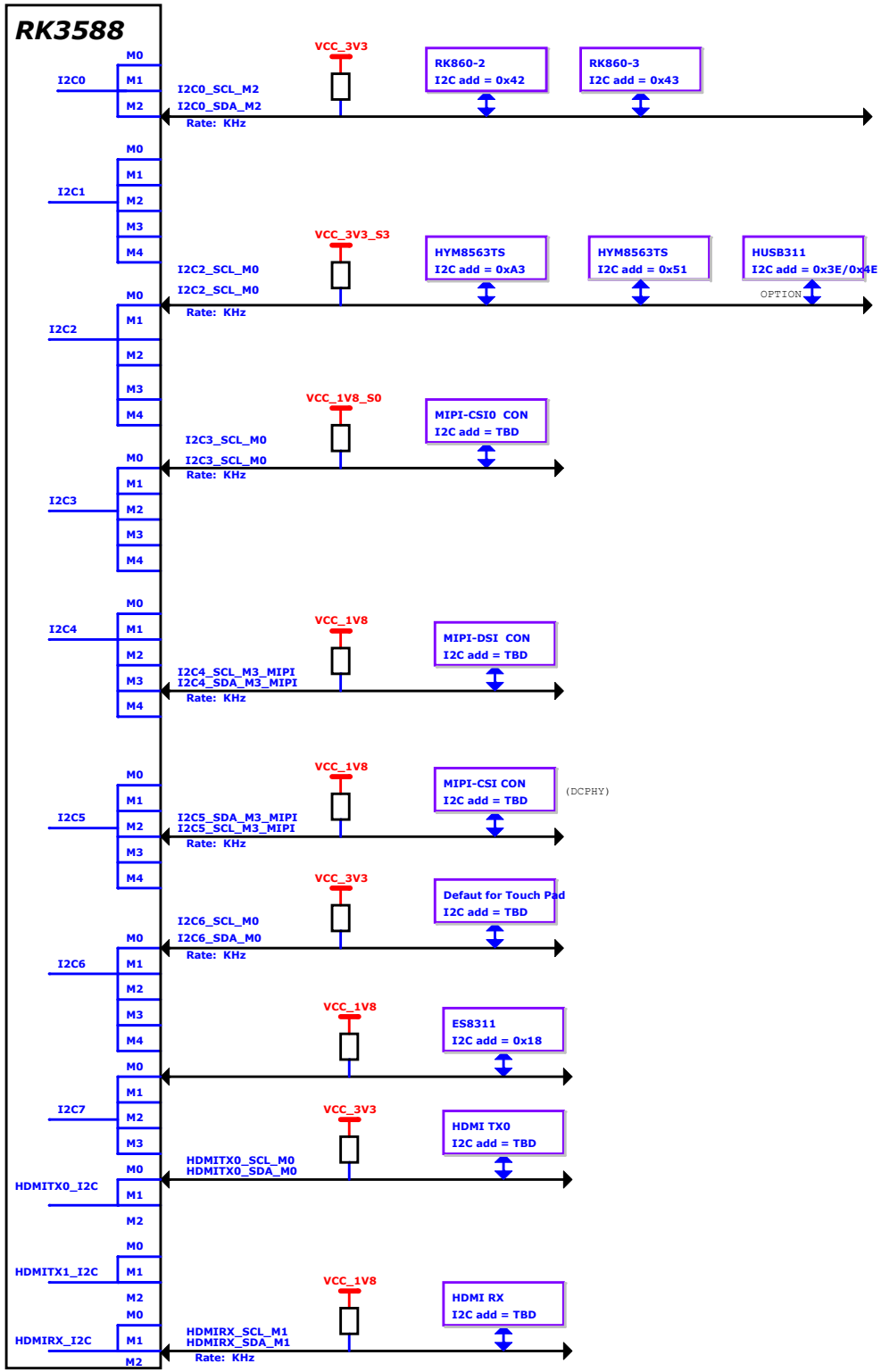

UART MAP

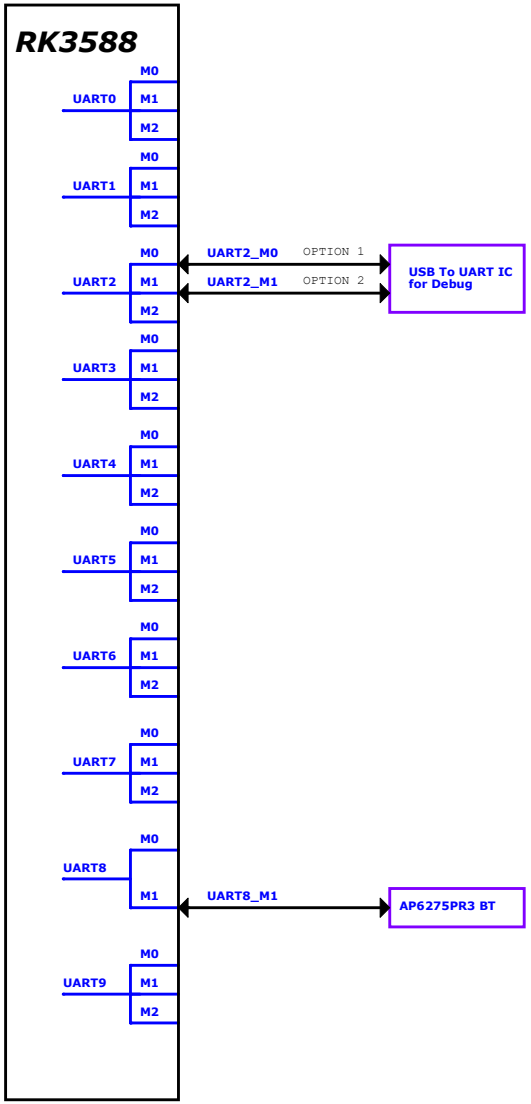

Rockchip Confidential

Rockchip Electronics Co., Ltd			
Project:	TB-RK3588B0		
File:	05.Lower-Speed Bus Map		
Date:	Tuesday, February 28, 2023	Rev:	V0.1
Designed by: DJ	Reviewed by:	Sheet:	0 of 0

USB Controller Configure Table

Controller Name	Pin Name	Type-C Function	DPx4Lane Function		USB30 HOST+DPx2Lane Function		USB20 HOST+DPx2Lane Function		USB20 HOST+DPx4Lane Function	
			OPTION1	OPTION2	OPTION1	OPTION2	OPTION1	OPTION2	OPTION1	OPTION2
USB30 OTG0 Device or Host	TYPEC0_SBU1/DP0_AUXP TYPEC0_SBU2/DP0_AUXN	TYPEC0_SBU1 TYPEC0_SBU2	DP0_AUXP DP0_AUXN	DP0_AUXP DP0_AUXN	DP0_AUXP DP0_AUXN	DP0_AUXP DP0_AUXN	DP0_AUXP DP0_AUXN	DP0_AUXP DP0_AUXN	DP0_AUXP DP0_AUXN	DP0_AUXP DP0_AUXN
	TYPEC0_SSRX1P/DP0_TX0P TYPEC0_SSRX1N/DP0_TX0N	TYPEC0_SSRX1P TYPEC0_SSRX1N	DP0_TX0P DP0_TX0N	DP0_TX2P DP0_TX2N	TYPEC0_SSRX1P TYPEC0_SSRX1N	DP0_TX0P DP0_TX0N	DP0_TX0P DP0_TX0N		DP0_TX0P DP0_TX0N	DP0_TX2P DP0_TX2N
	TYPEC0_SSTX1P/DP0_TX1P TYPEC0_SSTX1N/DP0_TX1N	TYPEC0_SSTX1P TYPEC0_SSTX1N	DP0_TX1P DP0_TX1N	DP0_TX3P DP0_TX3N	TYPEC0_SSTX1P TYPEC0_SSTX1N	DP0_TX1P DP0_TX1N	DP0_TX1P DP0_TX1N		DP0_TX1P DP0_TX1N	DP0_TX3P DP0_TX3N
	TYPEC0_SSRX2P/DP0_TX2P TYPEC0_SSRX2N/DP0_TX2N	TYPEC0_SSRX2P TYPEC0_SSRX2N	DP0_TX2P DP0_TX2N	DP0_TX0P DP0_TX0N	DP0_TX2P DP0_TX2N	TYPEC0_SSRX2P TYPEC0_SSRX2N		DP0_TX2P DP0_TX2N	DP0_TX2P DP0_TX2N	DP0_TX0P DP0_TX0N
	TYPEC0_SSTX2P/DP0_TX3P TYPEC0_SSTX2N/DP0_TX3N	TYPEC0_SSTX2P TYPEC0_SSTX2N	DP0_TX3P DP0_TX3N	DP0_TX1P DP0_TX1N	DP0_TX3P DP0_TX3N	TYPEC0_SSTX2P TYPEC0_SSTX2N		DP0_TX3P DP0_TX3N	DP0_TX3P DP0_TX3N	DP0_TX1P DP0_TX1N
USB20 OTG0 Device or Host	TYPEC0_USB20_OTG_DP TYPEC0_USB20_OTG_DM	TYPEC0_USB20_OTG_DP TYPEC0_USB20_OTG_DM			TYPEC0_USB20_OTG_DP TYPEC0_USB20_OTG_DM	TYPEC0_USB20_OTG_DP TYPEC0_USB20_OTG_DM	TYPEC0_USB20_OTG_DP TYPEC0_USB20_OTG_DM	TYPEC0_USB20_OTG_DP TYPEC0_USB20_OTG_DM	TYPEC0_USB20_OTG_DP TYPEC0_USB20_OTG_DM	TYPEC0_USB20_OTG_DP TYPEC0_USB20_OTG_DM
USB30 OTG1 Device or Host	TYPEC1_SBU1/DP1_AUXP TYPEC1_SBU2/DP1_AUXN	TYPEC1_SBU1 TYPEC1_SBU2	DP1_AUXP DP1_AUXN	DP1_AUXP DP1_AUXN	DP1_AUXP DP1_AUXN	DP1_AUXP DP1_AUXN	DP1_AUXP DP1_AUXN	DP1_AUXP DP1_AUXN	DP1_AUXP DP1_AUXN	DP1_AUXP DP1_AUXN
	TYPEC1_SSRX1P/DP1_TX0P TYPEC1_SSRX1N/DP1_TX0N	TYPEC1_SSRX1P TYPEC1_SSRX1N	DP1_TX0P DP1_TX0N	DP1_TX2P DP1_TX2N	TYPEC1_SSRX1P TYPEC1_SSRX1N	DP1_TX0P DP1_TX0N	DP1_TX0P DP1_TX0N		DP1_TX0P DP1_TX0N	DP1_TX2P DP1_TX2N
	TYPEC1_SSTX1P/DP1_TX1P TYPEC1_SSTX1N/DP1_TX1N	TYPEC1_SSTX1P TYPEC1_SSTX1N	DP1_TX1P DP1_TX1N	DP1_TX3P DP1_TX3N	TYPEC1_SSTX1P TYPEC1_SSTX1N	DP1_TX1P DP1_TX1N	DP1_TX1P DP1_TX1N		DP1_TX1P DP1_TX1N	DP1_TX3P DP1_TX3N
	TYPEC1_SSRX2P/DP1_TX2P TYPEC1_SSRX2N/DP1_TX2N	TYPEC1_SSRX2P TYPEC1_SSRX2N	DP1_TX2P DP1_TX2N	DP1_TX0P DP1_TX0N	DP1_TX2P DP1_TX2N	TYPEC1_SSRX2P TYPEC1_SSRX2N		DP1_TX2P DP1_TX2N	DP1_TX2P DP1_TX2N	DP1_TX0P DP1_TX0N
	TYPEC1_SSTX2P/DP1_TX3P TYPEC1_SSTX2N/DP1_TX3N	TYPEC1_SSTX2P TYPEC1_SSTX2N	DP1_TX3P DP1_TX3N	DP1_TX1P DP1_TX1N	DP1_TX3P DP1_TX3N	TYPEC1_SSTX2P TYPEC1_SSTX2N		DP1_TX3P DP1_TX3N	DP1_TX3P DP1_TX3N	DP0_TX1P DP0_TX1N
USB20 OTG1 Device or Host	TYPEC1_USB20_OTG_DP TYPEC1_USB20_OTG_DM	TYPEC1_USB20_OTG_DP TYPEC1_USB20_OTG_DM			TYPEC1_USB20_OTG_DP TYPEC1_USB20_OTG_DM	TYPEC1_USB20_OTG_DP TYPEC1_USB20_OTG_DM	TYPEC1_USB20_OTG_DP TYPEC1_USB20_OTG_DM	TYPEC1_USB20_OTG_DP TYPEC1_USB20_OTG_DM	TYPEC1_USB20_OTG_DP TYPEC1_USB20_OTG_DM	TYPEC1_USB20_OTG_DP TYPEC1_USB20_OTG_DM
			OPTION1 USB30 HOST		OPTION2 USB30 HOST	USB30 OTG or Device				
USB30 OTG2 Device or Host	PCIE20_2_TXP/SATA30_2_TXP/USB30_2_SSTXP PCIE20_2_TXN/SATA30_2_TXN/USB30_2_SSTXN		USB30_2_SSTXP USB30_2_SSTXN		USB30_2_SSTXP USB30_2_SSTXN	USB30_2_SSTXP USB30_2_SSTXN				
	PCIE20_2_RXP/SATA30_2_RXP/USB30_2_SSRXP PCIE20_2_RXN/SATA30_2_RXN/USB30_2_SSRXN		USB30_2_SSRXP USB30_2_SSRXN		USB30_2_SSRXP USB30_2_SSRXN	USB30_2_SSRXP USB30_2_SSRXN				
USB20 HOST0	USB20_HOST0_DP USB20_HOST0_DM		USB20_HOST0_DP USB20_HOST0_DM							
USB20 HOST1	USB20_HOST1_DP USB20_HOST1_DM				USB20_HOST1_DP USB20_HOST1_DM					
						TYPEC1_USB20_OTG_DP TYPEC1_USB20_OTG_DM				

Note:

DP Lane swap enable
0:Lane0/1/2/3 TxData mapping to Lane0/1/2/3_TXDP/N
1:Lane0/1/2/3 TxData mapping to Lane2/3/0/1_TXDP/N

USB3.0/DP1.4 Lane Diagram

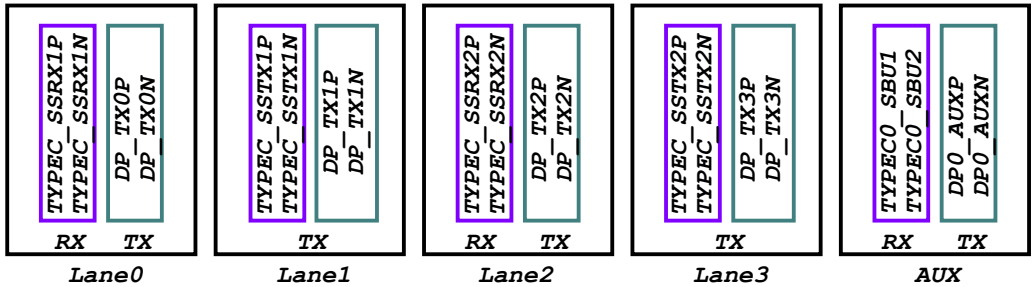

TYPE-C Connector Diagram

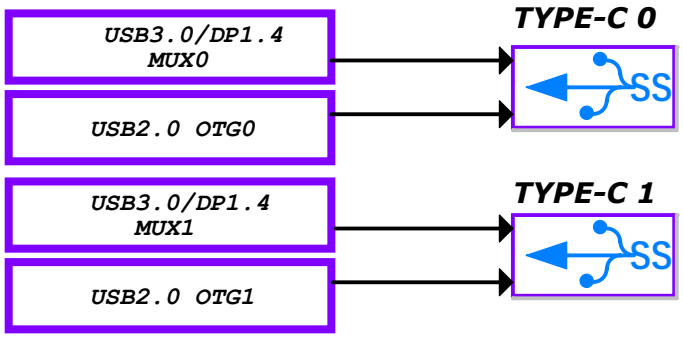

Rockchip Confidential

Rockchip	Rockchip Electronics Co., Ltd		
Project:	TB-RK3588B0		
File:	07.USB Controller Configure Tab		
Date:	Tuesday, February 28, 2023	Rev:	V1.0
Designed by: DJ	Reviewed by:	Sheet:	0 of 0

PCIe3.0 REFCLK

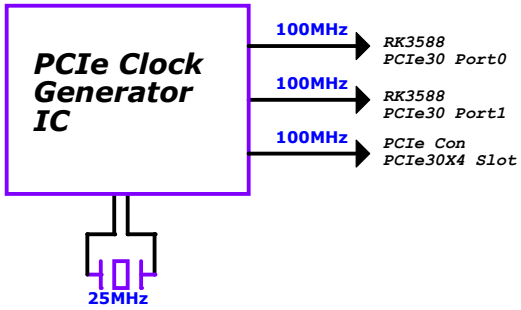

PCIe2.0 REFCLK

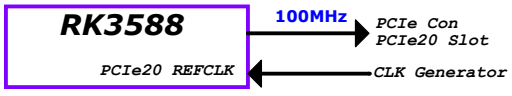

PCIe/SATA Connecter Diagram

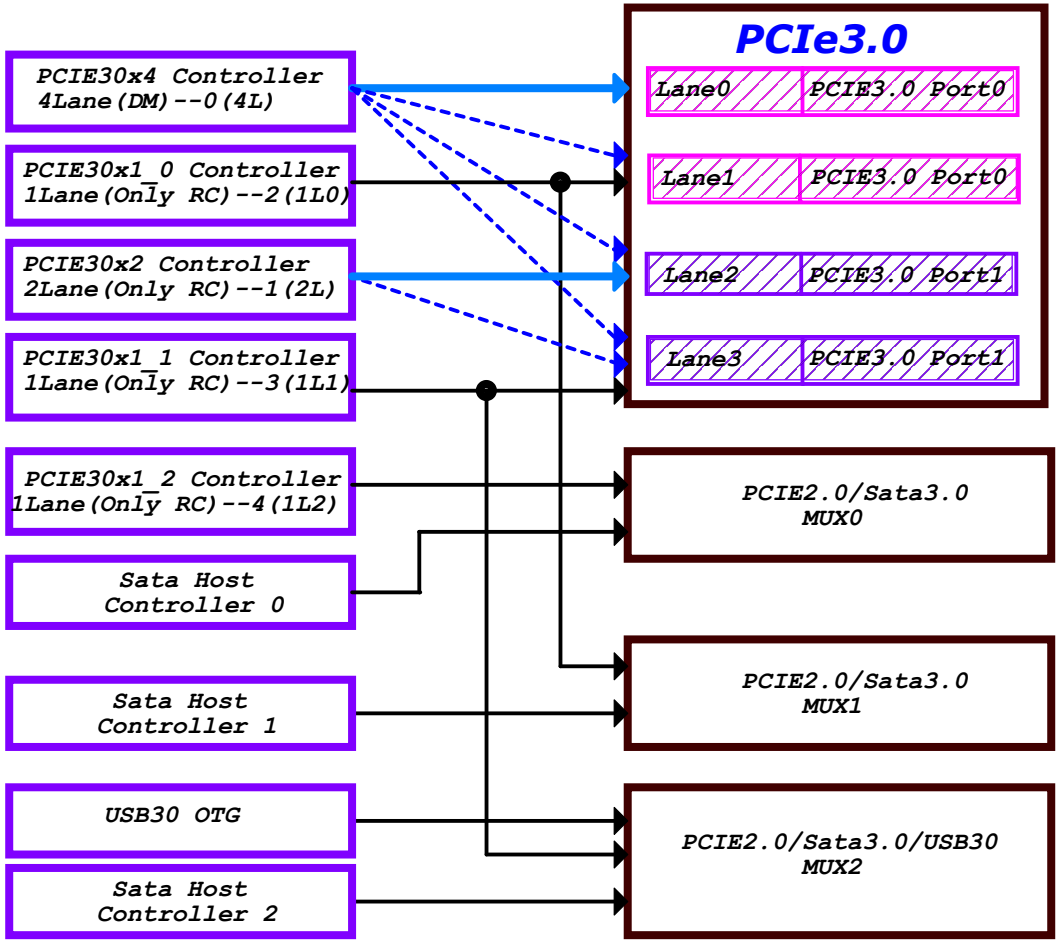

PCIe Controller Configure Table

Controller Name	Data & Clk Lane Configure			Control GPIO
	OPTION	CLK LANE	DATA LANE	
PCIE30X4 RC & EP	OPTION1	PCIE30_PORT0_REF_CLKP PCIE30_PORT0_REF_CLKN	PCIE30_PORT0_TX0 PCIE30_PORT0_RX0	PCIE30X4_CLKREQ_M* PCIE30X4_WAKEN_M* PCIE30X4_PERSTN_M* PCIE30X4_BUTTON_RSTN
	OPTION2	PCIE30_PORT0_REF_CLKP PCIE30_PORT0_REF_CLKN	PCIE30_PORT0_TX0 PCIE30_PORT0_RX0 PCIE30_PORT0_TX1 PCIE30_PORT0_RX1	
	OPTION3	PCIE30_PORT0_REF_CLKP PCIE30_PORT0_REF_CLKN PCIE30_PORT1_REF_CLKP PCIE30_PORT1_REF_CLKN	PCIE30_PORT0_TX0 PCIE30_PORT1_TX0 PCIE30_PORT0_RX0 PCIE30_PORT1_RX0 PCIE30_PORT0_TX1 PCIE30_PORT1_TX1 PCIE30_PORT0_RX1 PCIE30_PORT1_RX1	
PCIE30X2 RC	OPTION1	PCIE30_PORT1_REF_CLKP PCIE30_PORT1_REF_CLKN	PCIE30_PORT1_TX0 PCIE30_PORT1_RX0	PCIE30X2_CLKREQ_M* PCIE30X2_WAKEN_M* PCIE30X2_PERSTN_M* PCIE30X2_BUTTON_RSTN
	OPTION2	PCIE30_PORT1_REF_CLKP PCIE30_PORT1_REF_CLKN	PCIE30_PORT1_TX0 PCIE30_PORT1_RX0 PCIE30_PORT1_TX1 PCIE30_PORT1_RX1	
PCIE30X1_0 RC	OPTION1	PCIE30_PORT0_REF_CLKP PCIE30_PORT0_REF_CLKN	PCIE30_PORT0_TX1 PCIE30_PORT0_RX1	PCIE30X1_0_CLKREQ_M* PCIE30X1_0_WAKEN_M* PCIE30X1_0_PERSTN_M* PCIE30X1_0_BUTTON_RSTN
	OPTION2	PCIE20_1_REFCLKP PCIE20_1_REFCLKN	PCIE20_1_TXP PCIE20_1_RXP PCIE20_1_TXN PCIE20_1_RXN	
PCIE30X1_1 RC	OPTION1	PCIE30_PORT1_REF_CLKP PCIE30_PORT1_REF_CLKN	PCIE30_PORT1_TX1 PCIE30_PORT1_RX1	PCIE30X1_1_CLKREQ_M* PCIE30X1_1_WAKEN_M* PCIE30X1_1_PERSTN_M* PCIE30X1_1_BUTTON_RSTN
	OPTION2	PCIE20_2_REFCLKP PCIE20_2_REFCLKN	PCIE20_2_TXP PCIE20_2_RXP PCIE20_2_TXN PCIE20_2_RXN	
PCIE30X1_2 RC	OPTION1	PCIE20_0_REFCLKP PCIE20_0_REFCLKN	PCIE20_0_TXP PCIE20_0_RXP PCIE20_0_TXN PCIE20_0_RXN	PCIE20X1_2_CLKREQ_M* PCIE20X1_2_WAKEN_M* PCIE20X1_2_PERSTN_M* PCIE20X1_2_BUTTON_RSTN

Note:
PCIE30_PORT*_REF_CLKP/N is input gpio

PCIE20_*_REFCLKP/N is output or input gpio

Note:
M*=Mean to M0 or M1,It's the same source,Just multiplex to M0 or M1, So,Only use one at the same time.

PCIe/SATA Function Combination

Function Combination

Function Item	PCIEX4	PCIEX2	PCIEX1	SATA
Option1	1(DM)	0	3(RC)	0
Option2	1(DM)	0	2(RC)	1
Option3	1(DM)	0	1(RC)	2
Option4	1(DM)	0	0	3
Option5	0	1(DM)+1(RC)	3(RC)	0
Option6	0	1(DM)+1(RC)	2(RC)	1
Option7	0	1(DM)+1(RC)	1(RC)	2
Option8	0	1(DM)+1(RC)	0	3
Option9	0	1(DM)	4(RC)	1
Option10	0	1(DM)	3(RC)	2
Option11	0	1(DM)	2(RC)	3
Option12	0	0	5(RC)	2
Option13	0	0	4(RC)	3

Rockchip Confidential

Rockchip Electronics Co., Ltd

Project:	TB-RK3588B0		
File:	08.PCIE Fun Map		
Date:	Tuesday, February 28, 2023	Rev:	V1.0
Designed by: DJ	Reviewed by:	Sheet:	0 of 0

12V/3A DCIN

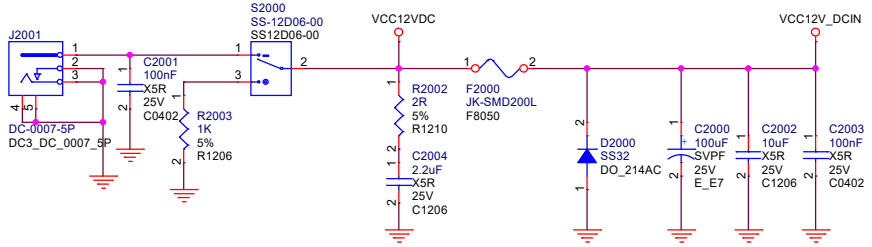

FAN_POWER

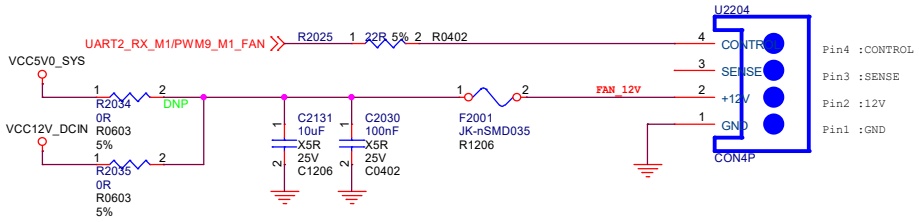

VCC4V0_SYS

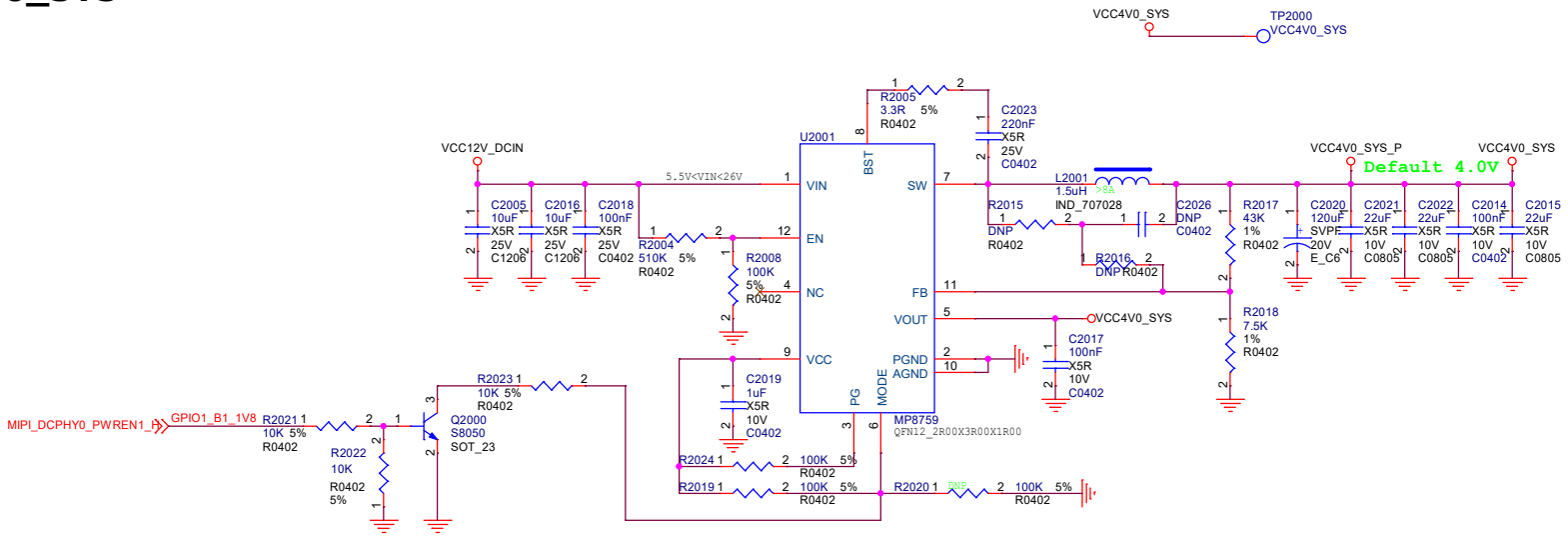

VCC5V0_USB

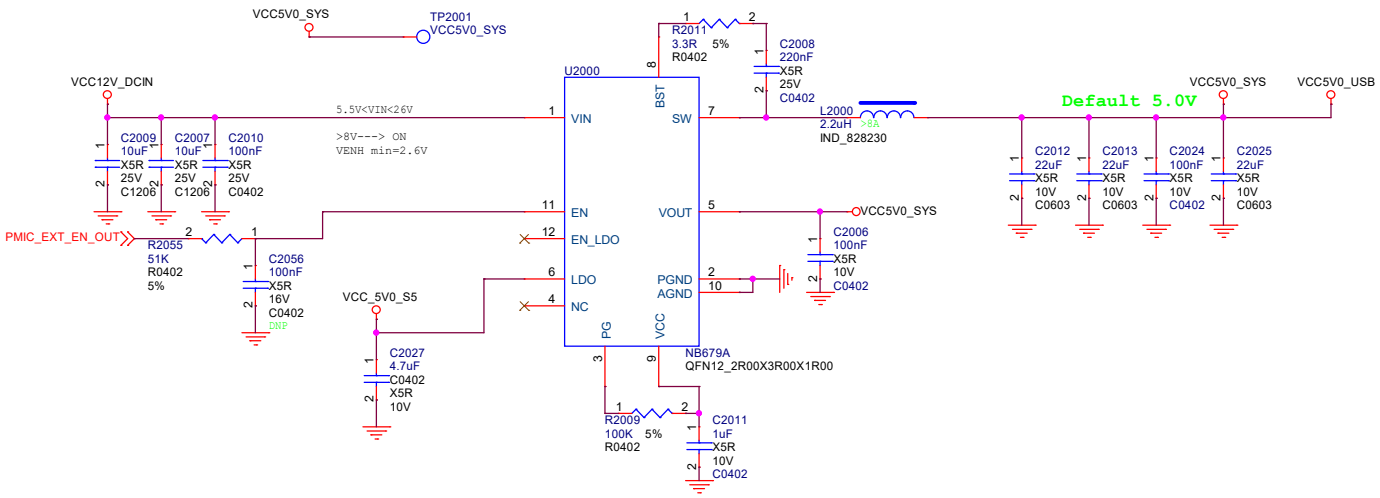

Rockchip Confidential

Rockchip	Rockchip Electronics Co., Ltd				
Project:	TB-RK3588B0				
File:	20.Power_DC IN				
Date:	Tuesday, February 28, 2023			Rev:	V1.0
Designed by:	DJ	Reviewed by:	Default	Sheet:	0 of 0

RTC IC

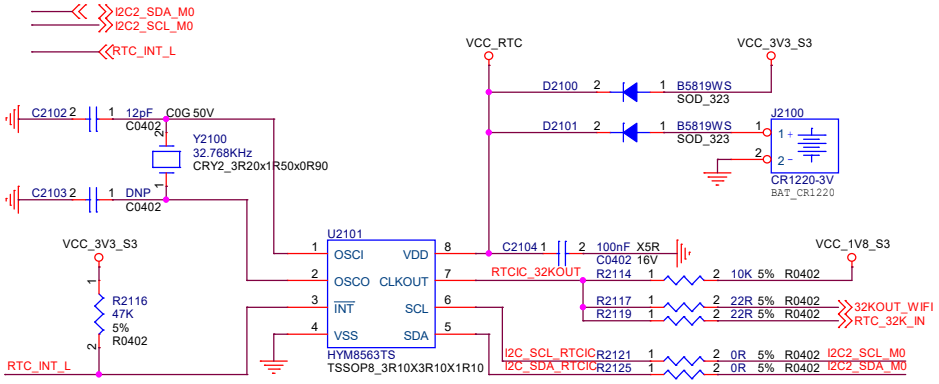

Address:Read A3H,Write A2H

100M CLK FOR PCIE20_0

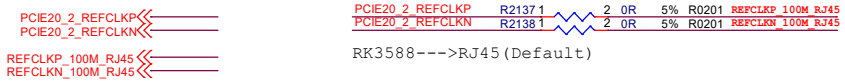

RK3588--->RJ45(Default)

100M CLK FOR PCIE20_1

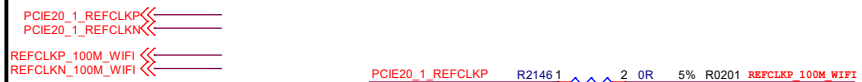

RK3588--->WIFI(Default)

Rockchip Confidential

Rockchip	Rockchip Electronics Co., Ltd				
Project:	TB-RK3588B0				
File:	21.Other Power/RTC/PCIE 20 CLK				
Date:	Tuesday, February 28, 2023			Rev:	V1.0
Designed by:	DJ	Reviewed by:	Default	Sheet:	0 of 0

USB2.0 HOST PORT

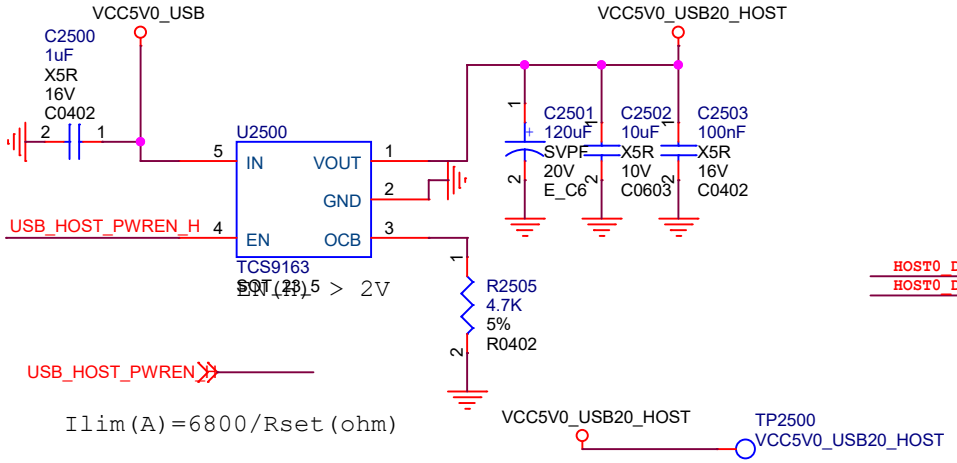

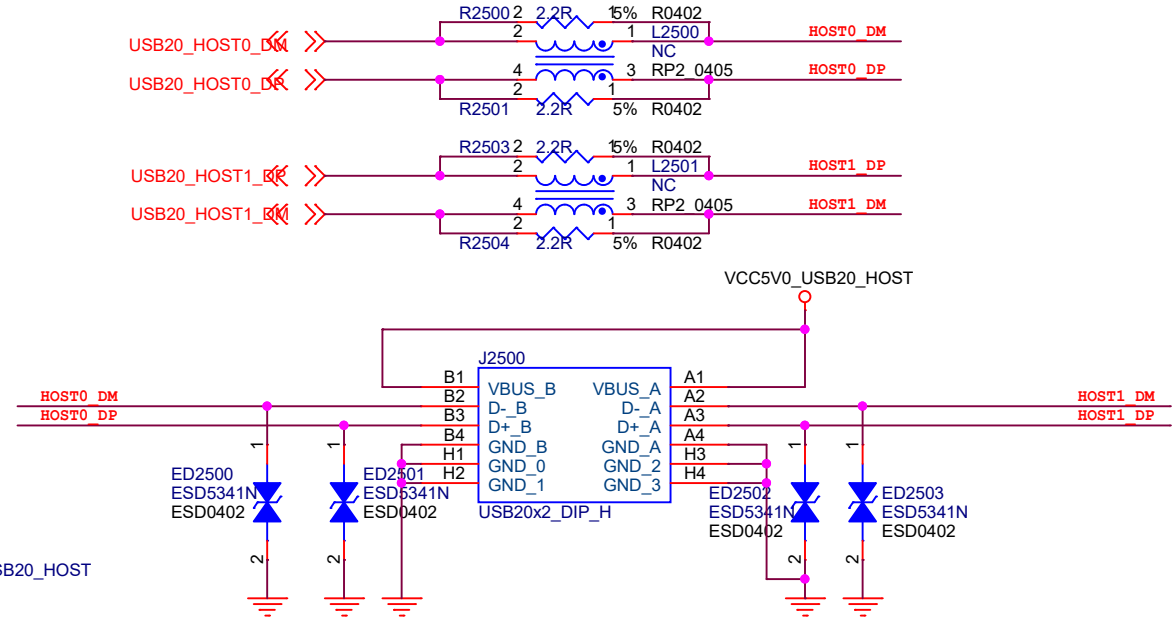

USB3.0 HOST PORT

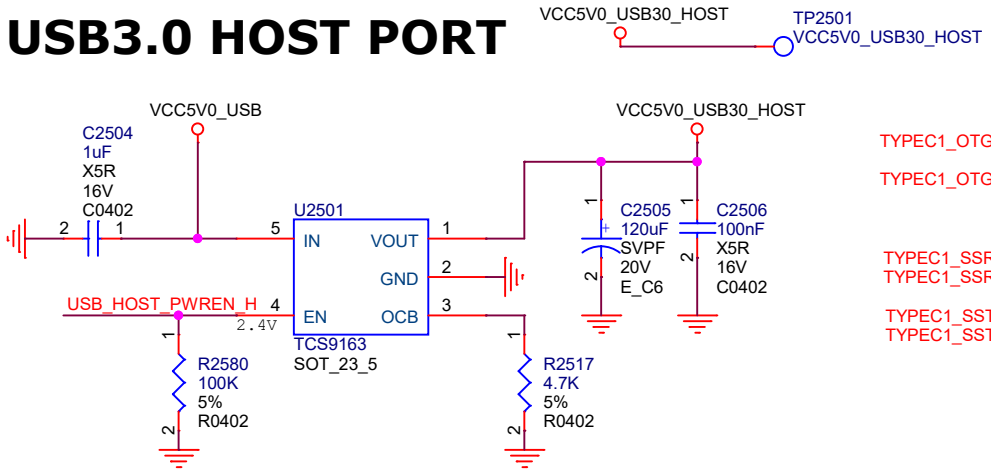

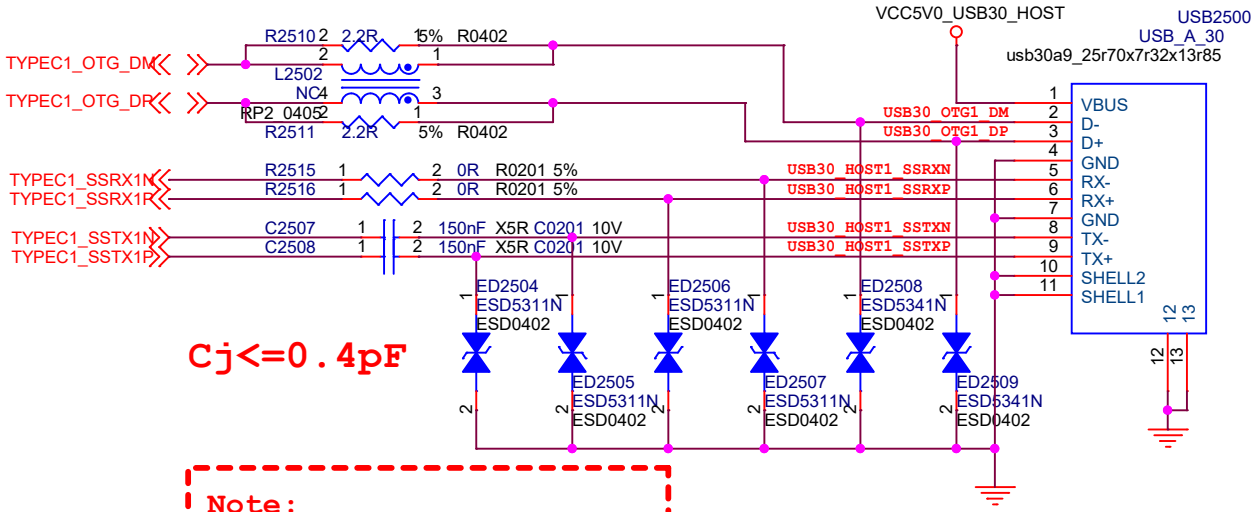

Cj<=0.4pF

Note:
USB3.0信号的ESD不能随便换掉
如需换那么必须选择相同的规格。

Rockchip Confidential

Rockchip Electronics Co., Ltd			
Project:	TB-RK3588B0		
File:	25.USB20/USB30 Port		
Date:	Friday, March 03, 2023	Rev:	V1.0
Designed by: DJ	Reviewed by:	Sheet:	0 of 0

Type-C PORT

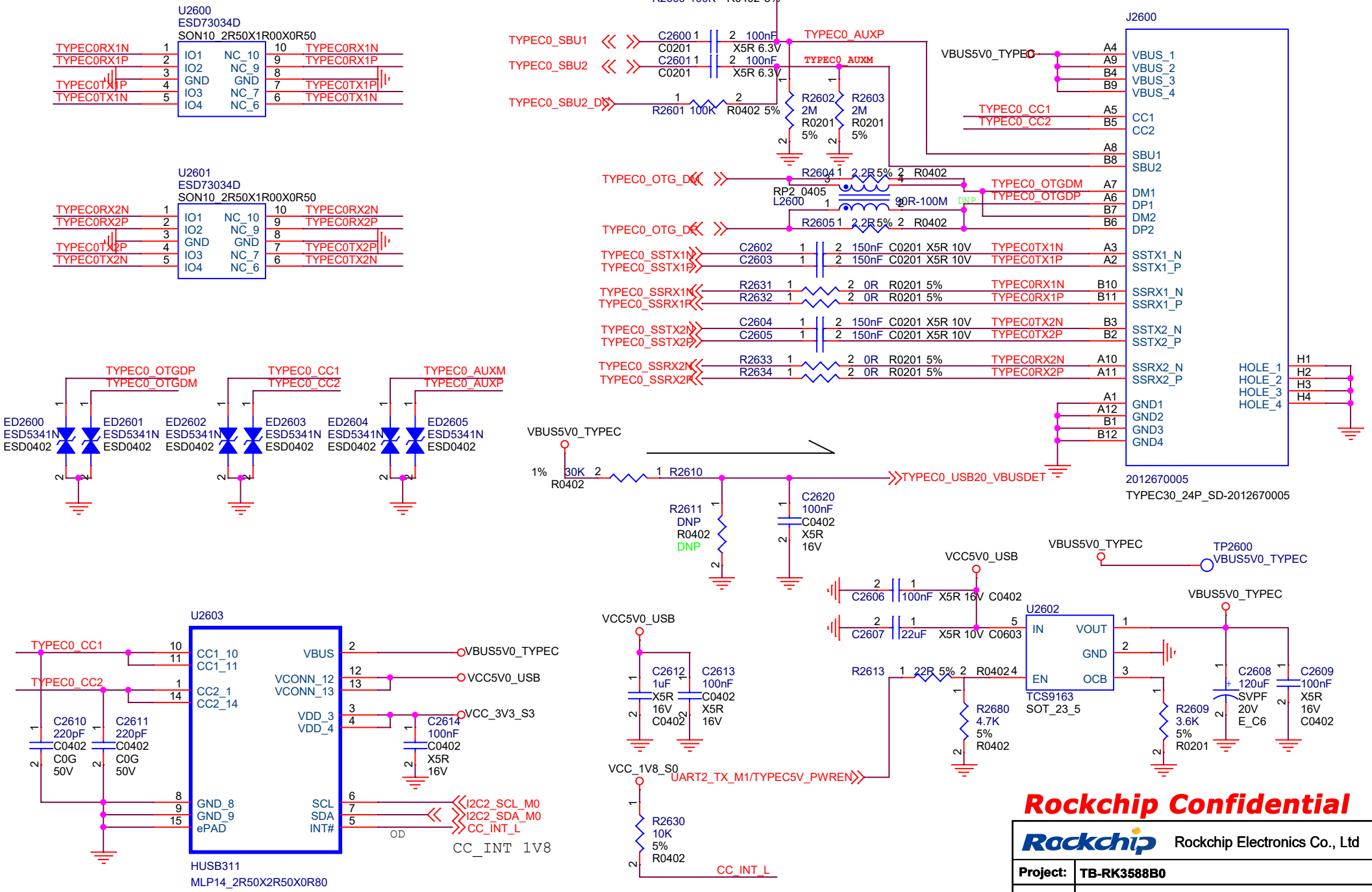

Rockchip Confidential

Rockchip Electronics Co., Ltd			
Project:	TB-RK3588B0		
File:	26.Type-C Port		
Date:	Friday, March 03, 2023	Rev:	V1.0
Designed by: DJ	Reviewed by:	Sheet:	0 of 0

MIPI D/C PHY0 DPHY-RX

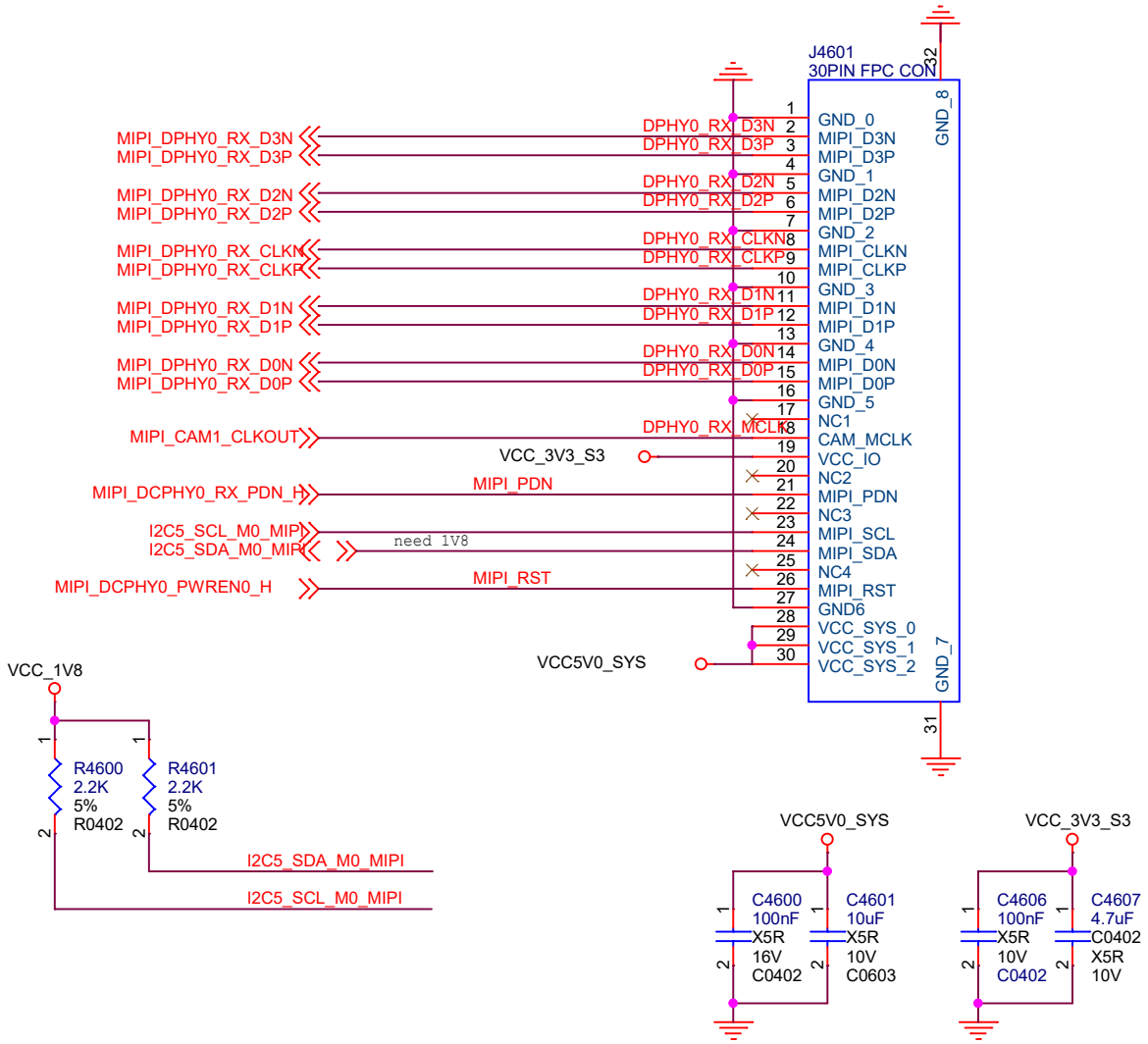

Rockchip Confidential

Rockchip Electronics Co., Ltd					
Project:	TB-RK3588B0				
File:	46.VI-Camera D/C PHY_RX				
Date:	Tuesday, February 28, 2023			Rev:	V1.0
Designed by:	DJ	Reviewed by:		Sheet:	0 of 0

MIPI-CSI0_RX

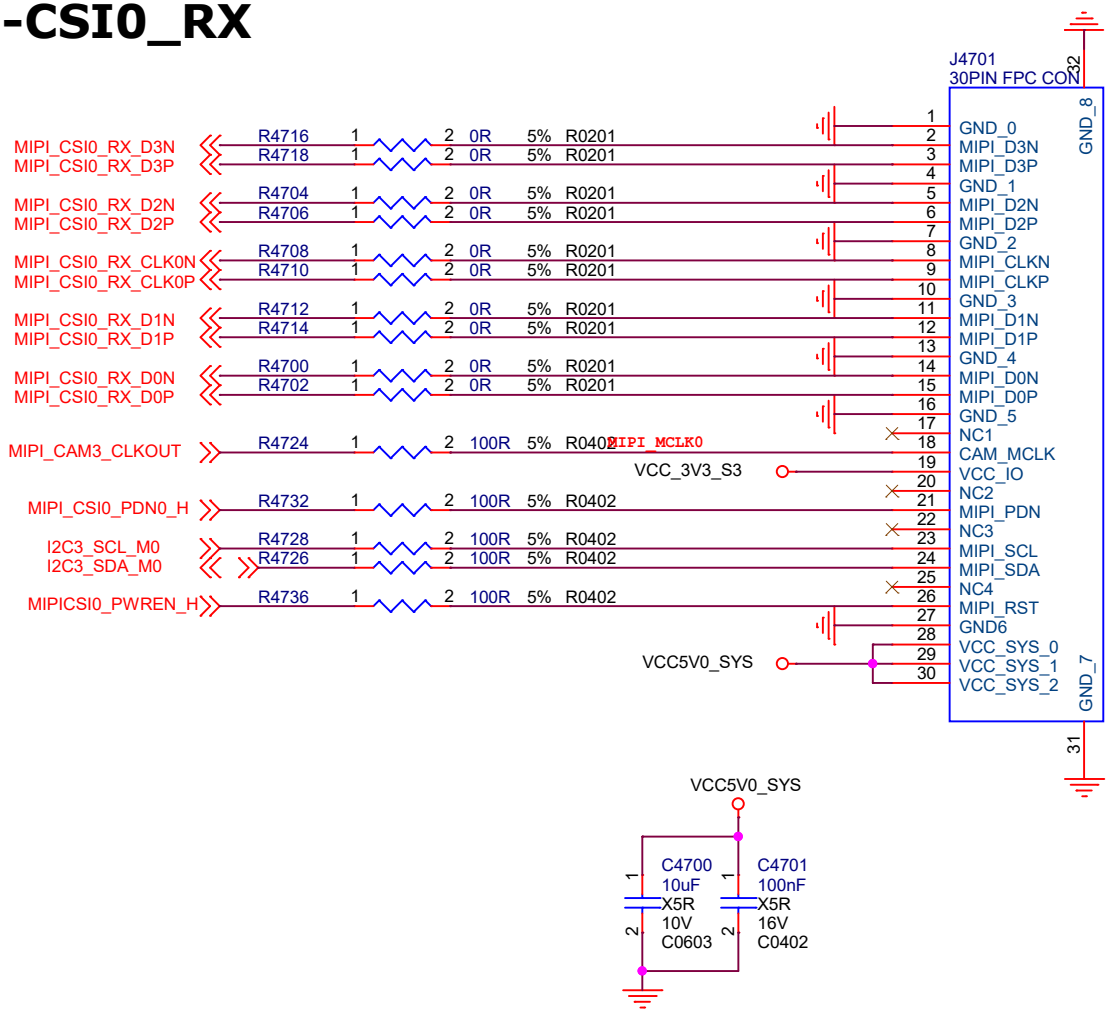

Rockchip Confidential

Rockchip Electronics Co., Ltd					
Project:	TB-RK3588B0				
File:	47.VI-Camera_MIPI-CSI				
Date:	Tuesday, February 28, 2023			Rev:	V1.0
Designed by:	DJ	Reviewed by:		Sheet:	0 of 0

HDMI2.0 RX

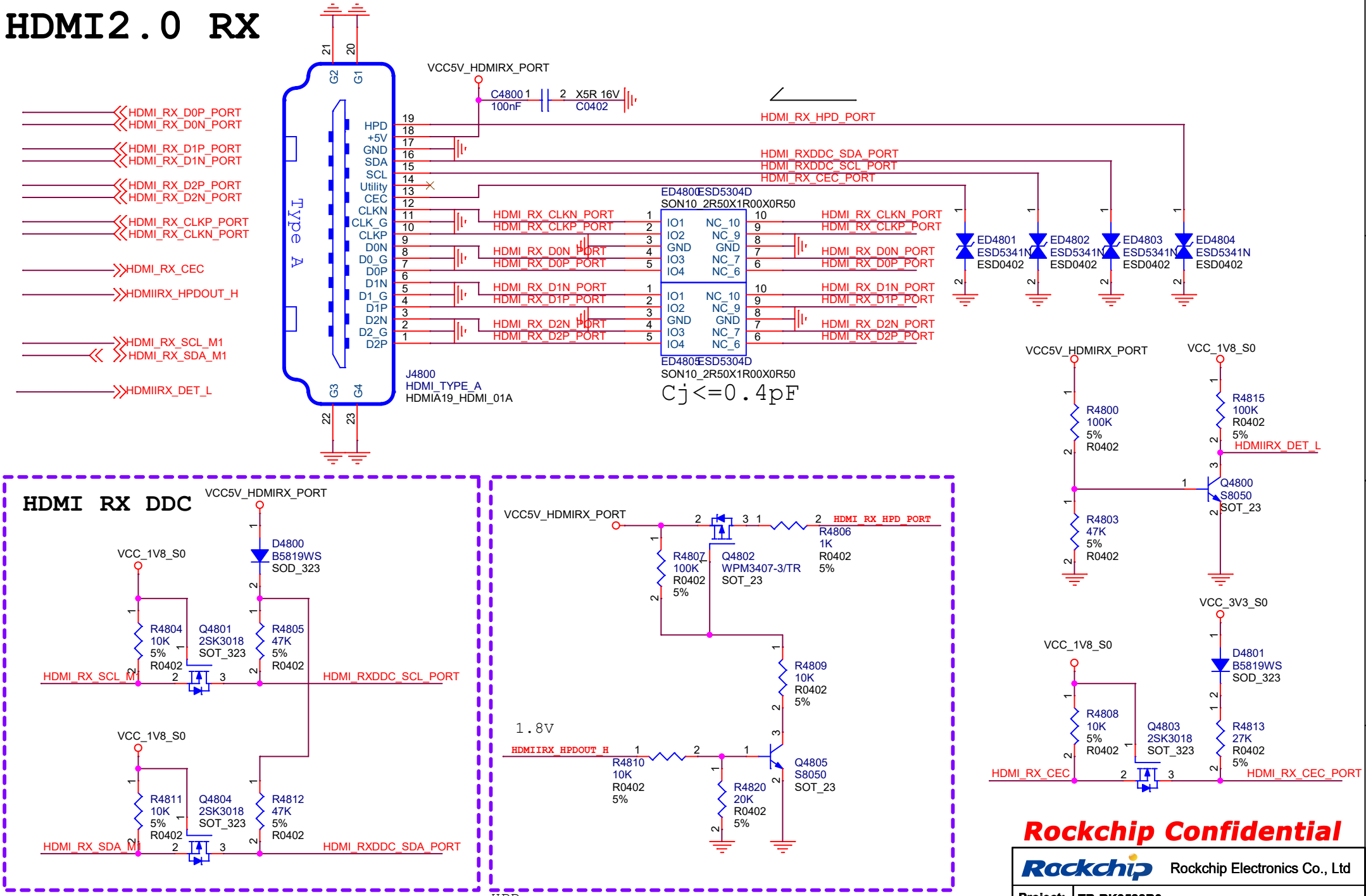

HPD:
Sink Side: Require output, Min 2.4V; Max 5.3V
Source Side:Require input and Detection.
Min 2.0V,Max:5.3V.

Rockchip Confidential

Rockchip Electronics Co., Ltd			
Project:	TB-RK3588B0		
File:	48.VI-HDMI2.0 RX		
Date:	Tuesday, February 28, 2023	Rev:	V1.0
Designed by: DJ	Reviewed by:	Sheet:	0 of 0

HDMI TX0

HDMI TX DDC

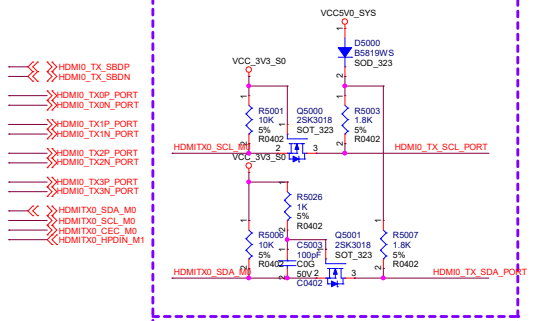

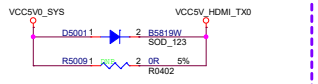

HDMI TX eARC

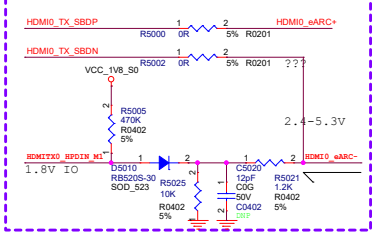

HDMI TX CEC

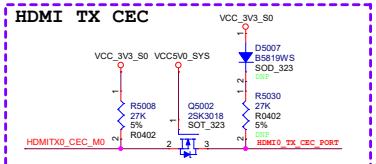

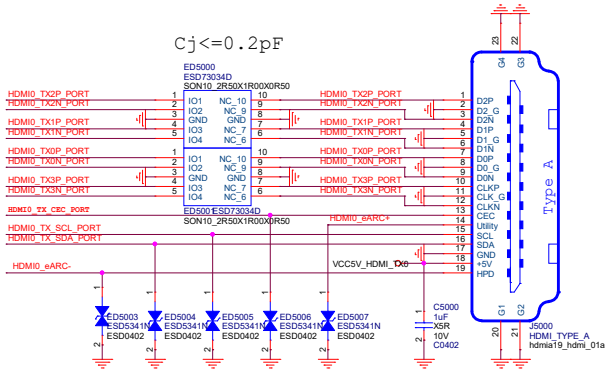

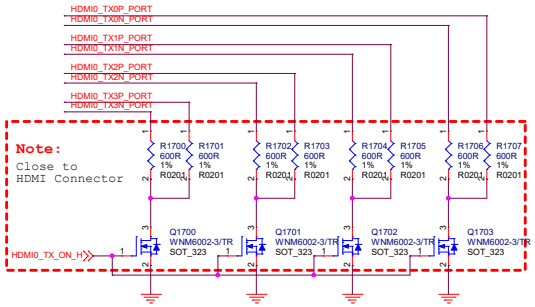

EDP Tx

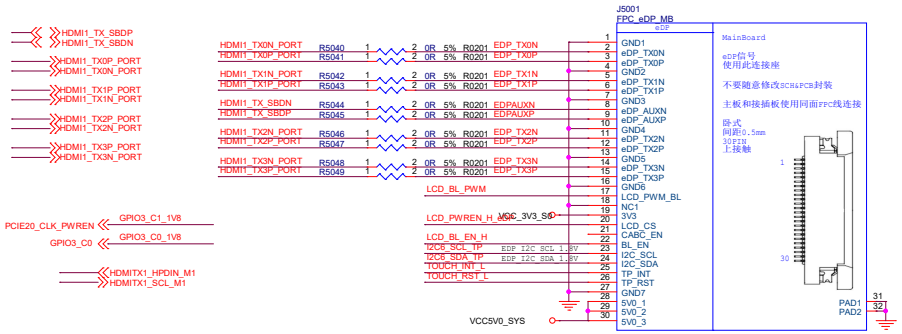

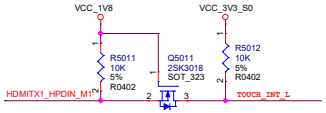

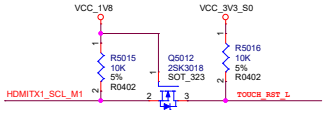

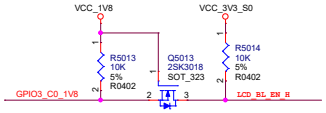

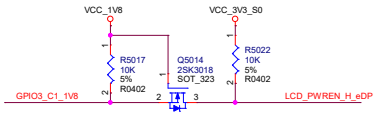

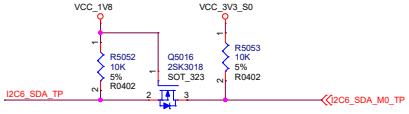

Rockchip Confidential

Rockchip Electronics Co., Ltd			
Project:	TB-RK3588B0		
File:	50.VO-HDMI2.1 TX / eDP TX		
Date:	Tuesday, February 28, 2023	Rev:	V1.0
Designed by: DJ	Reviewed by:	Sheet:	0 of 0

MIPI DPHY0 TX

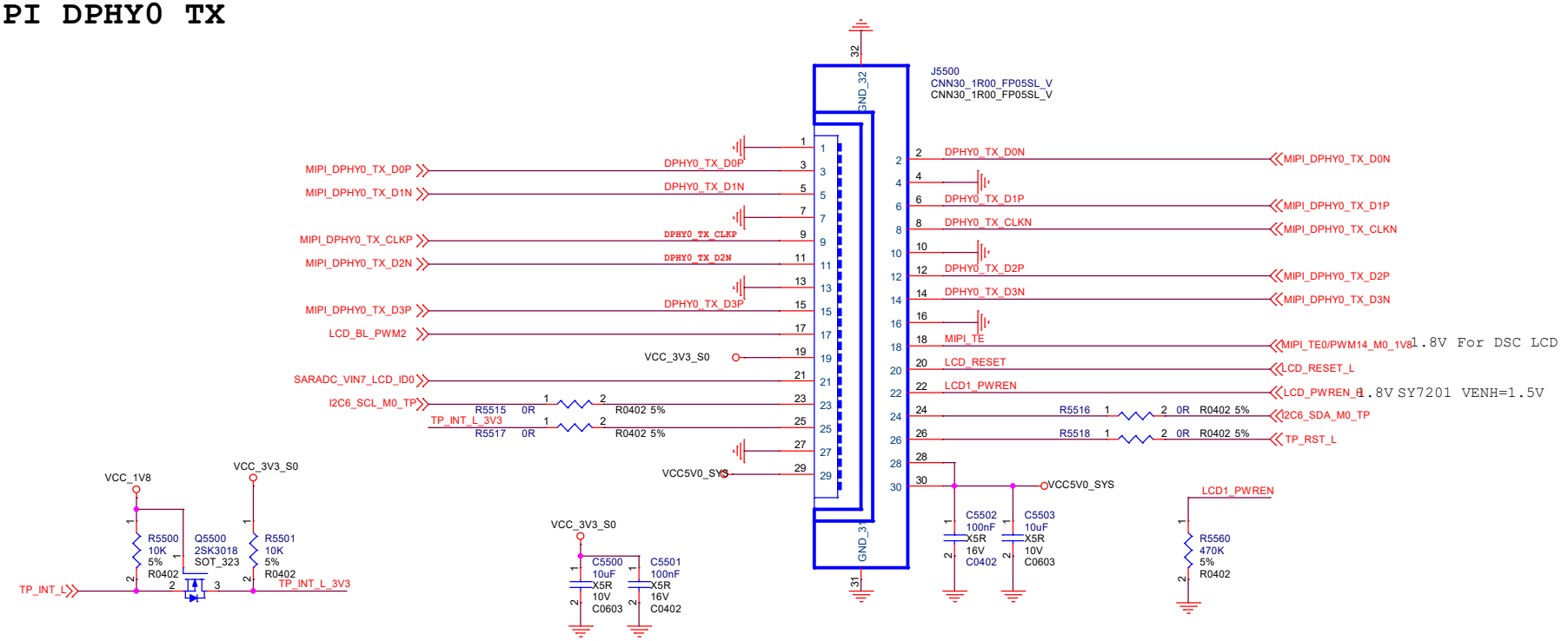

MIPI FPC Pin List

```
Pin1 :GND
Pin2 :D0N
Pin3 :D0P
Pin4 :GND
Pin5 :D1N
Pin6 :D1P
Pin7 :GND
Pin8 :CLKN
Pin9 :CLKP
Pin10:GND
Pin11:D2N
Pin12:D2P
Pin13:GND
Pin14:D3N
Pin15:D3P
Pin16:GND
Pin17:LCD_PWM_BL
Pin18:TE
Pin19:VCC_LCD(3.3V)
Pin20:LCD_RST(LCD板RC复位)
Pin21:HW ID
Pin22:LCD_BL_EN(1.8V/3.3V)
Pin23:TP_I2C_SCL(3.3V)
Pin24:TP_I2C_SDA(3.3V)
Pin25:TP_INT(3.3V)
Pin26:TP_RST(3.3V)
Pin27:GND
Pin28:5V0
Pin29:5V0
Pin30:5V0
```

Rockchip Confidential

Rockchip Electronics Co., Ltd			
Project:	TB-RK3588B0		
File:	55.VO-LCM_MIPI		
Date:	Tuesday, February 28, 2023	Rev:	V1.0
Designed by: DJ	Reviewed by:	Sheet:	0 of 0

PCIe WIFI6/BT Module-2T2R

This standalone BT-ANT is reserved for AP6275PR3. Leave PIN48 float for AP6275P, of which BT-ANT is mux with WIFI.

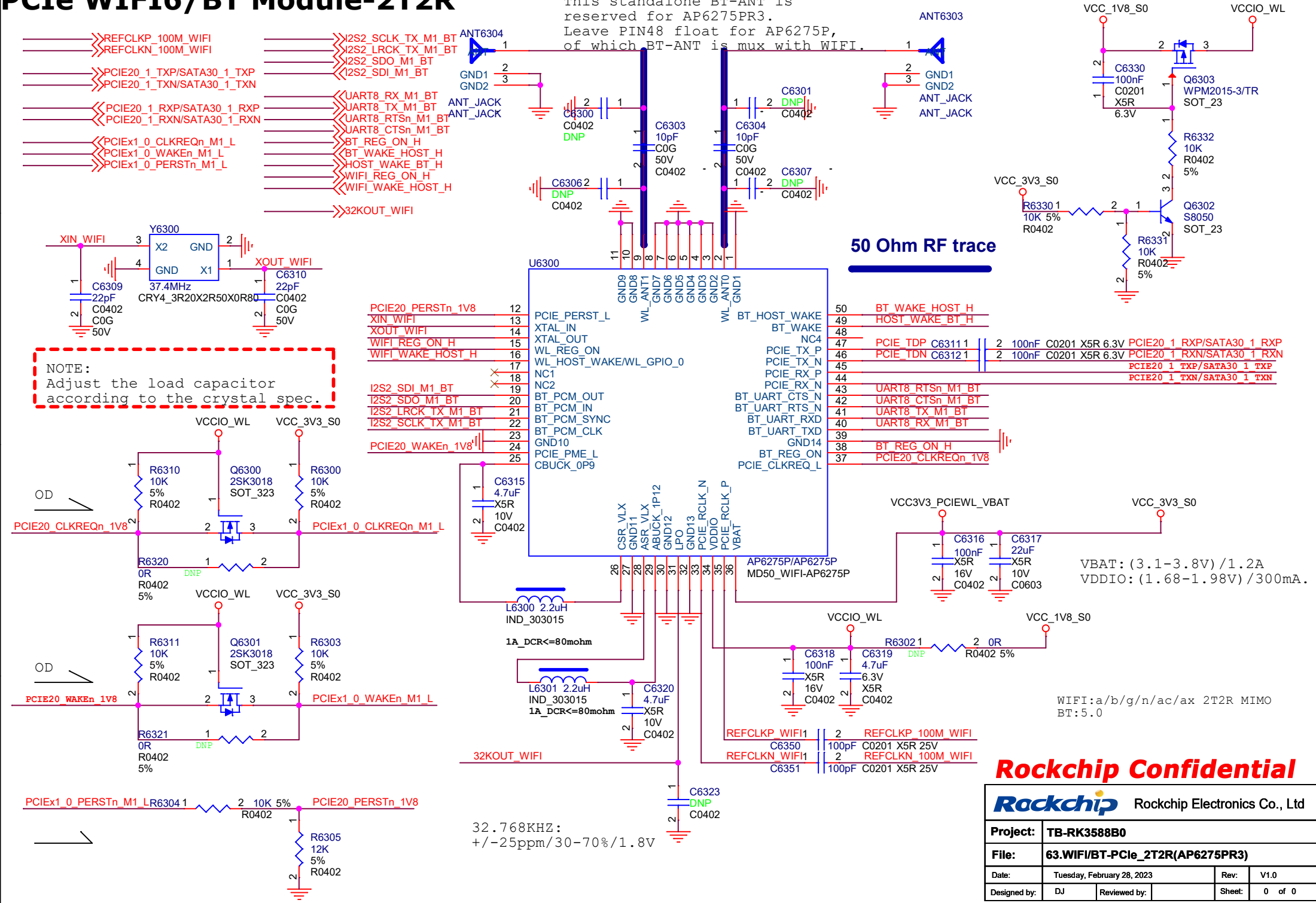

Rockchip Confidential

Rockchip Electronics Co., Ltd			
Project:	TB-RK3588B0		
File:	63.WIFI/BT-PCIe_2T2R(AP6275PR3)		
Date:	Tuesday, February 28, 2023	Rev:	V1.0
Designed by: DJ	Reviewed by:	Sheet:	0 of 0

RGMII TO RJ45

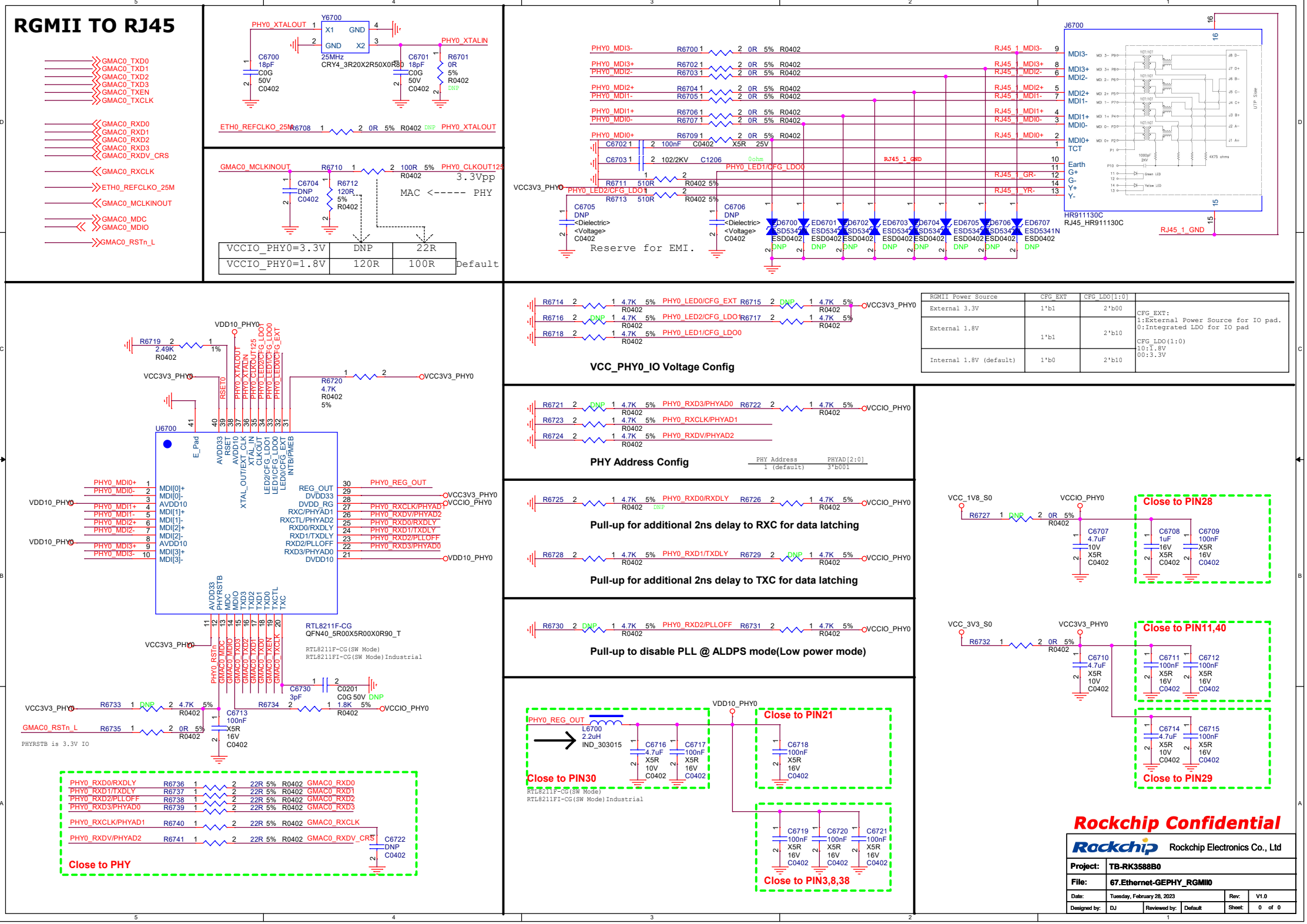

PCIE TO RJ45

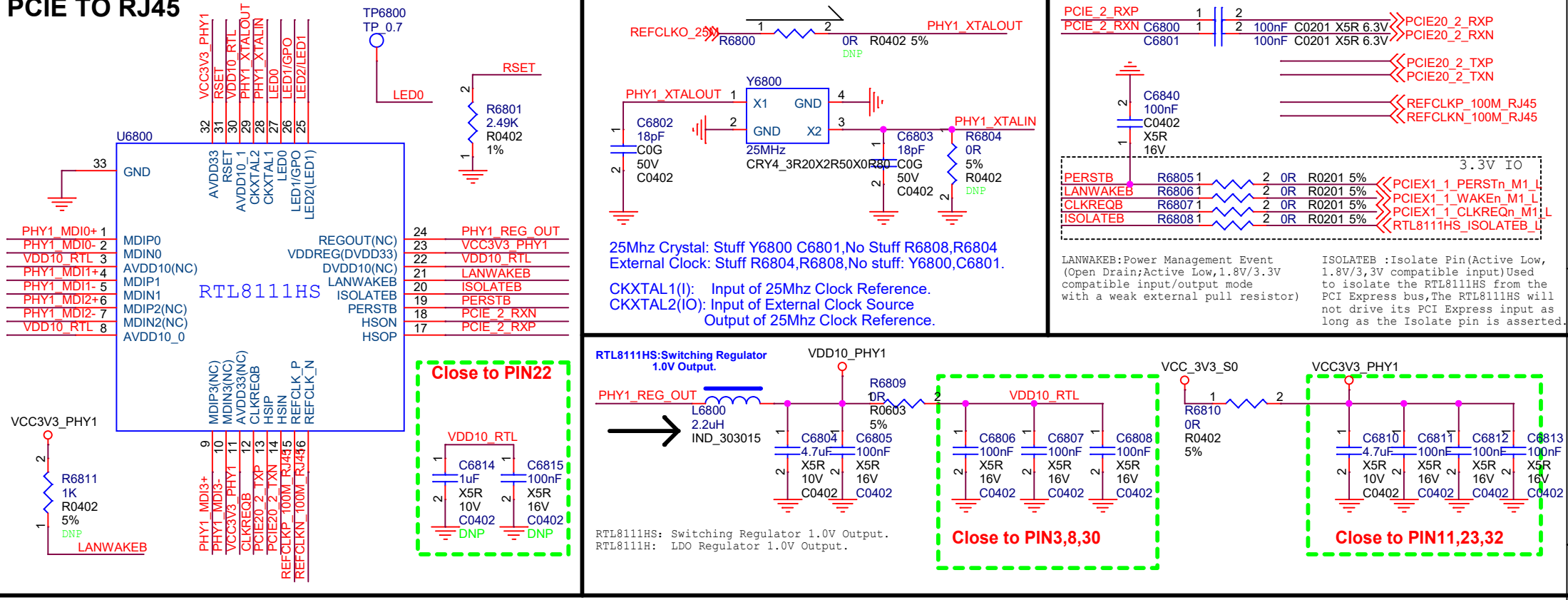

25Mhz Crystal: Stuff Y6800 C6801,No Stuff R6808,R6804
External Clock: Stuff R6804,R6808,No stuff: Y6800,C6801.

CKXTAL1(I): Input of 25Mhz Clock Reference.
CKXTAL2(IO): Input of External Clock Source
Output of 25Mhz Clock Reference.

LANWAKEB:Power Management Event (Open Drain;Active Low,1.8V/3.3V compatible input/output mode with a weak external pull resistor)

ISOLATEB :Isolate Pin(Active Low, 1.8V/3,3V compatible input)Used to isolate the RTL8111HS from the PCI Express bus,The RTL8111HS will not drive its PCI Express input as long as the Isolate pin is asserted.

RTL8111HS: Switching Regulator 1.0V Output.
RTL8111H: LDO Regulator 1.0V Output.

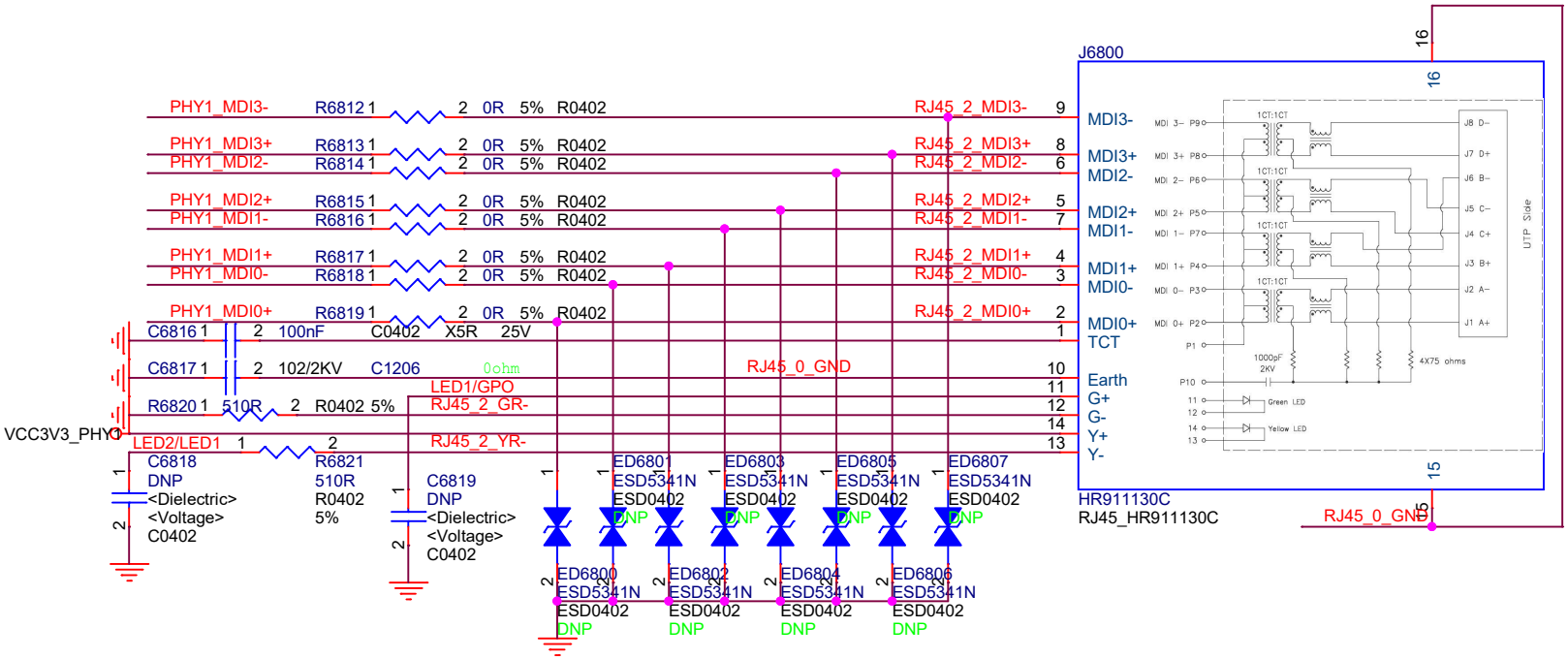

Rockchip Confidential

Rockchip	Rockchip Electronics Co., Ltd				
Project:	TB-RK3588B0				
File:	68.PCIE TO RJ45_RTL8111HS				
Date:	Tuesday, February 28, 2023			Rev:	V1.0
Designed by:	DJ	Reviewed by:	Default	Sheet:	0 of 0

CODEC ES8388

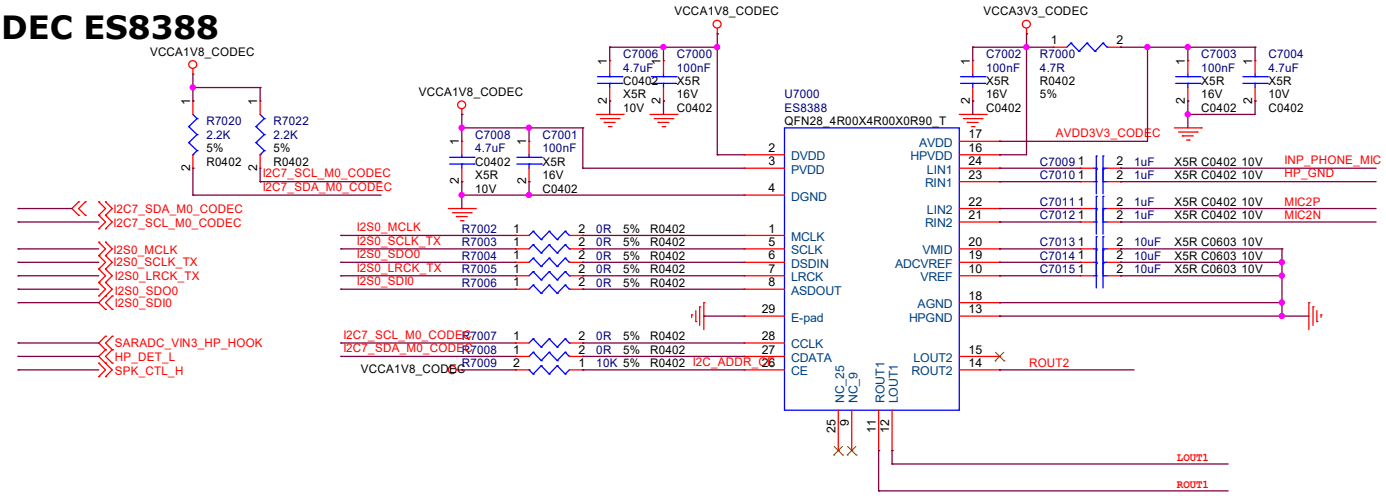

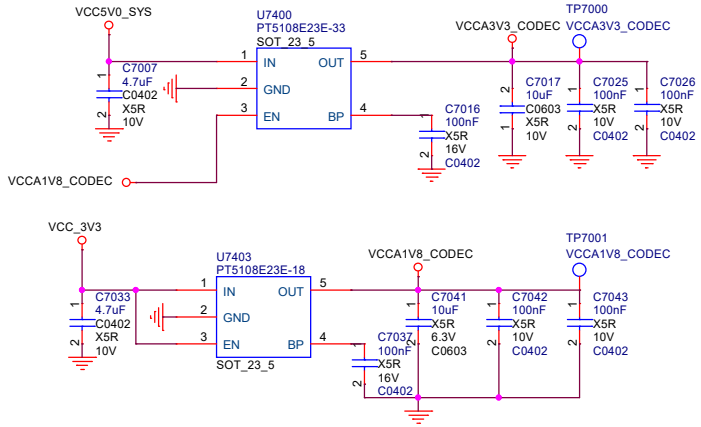

EARPHONE

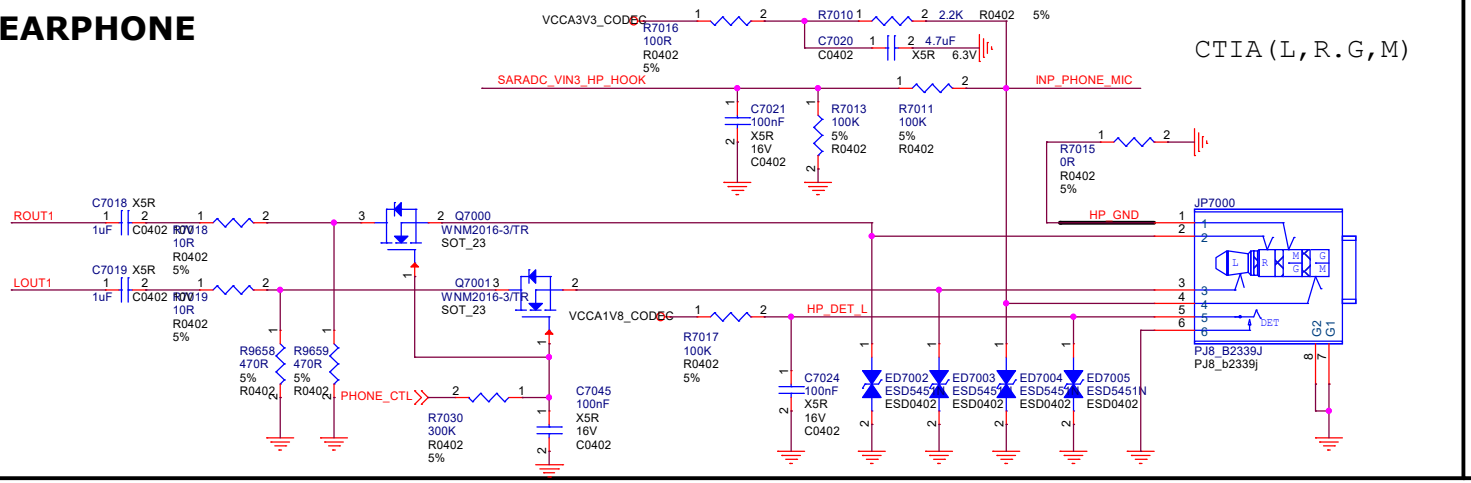

Analog MIC

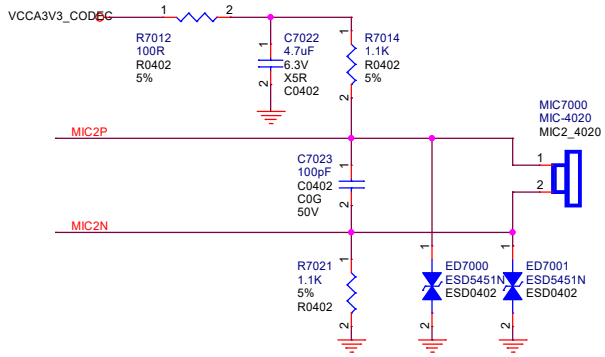

SPEAKER

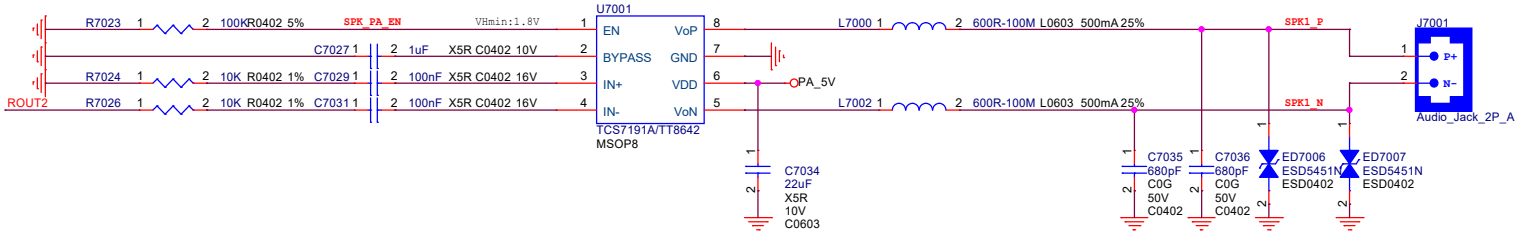

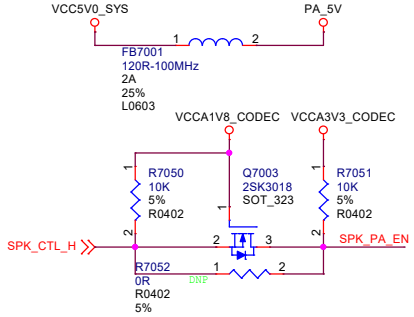

Rockchip Confidential

Rockchip	Rockchip Electronics Co., Ltd				
Project:	TB-RK3588B0				
File:	Audio Codec-ALC5651				
Date:	Tuesday, February 28, 2023			Rev:	V1.0
Designed by:	DJ	Reviewed by:		Sheet:	0 of 0

PCIe3.0 x 4 Slot

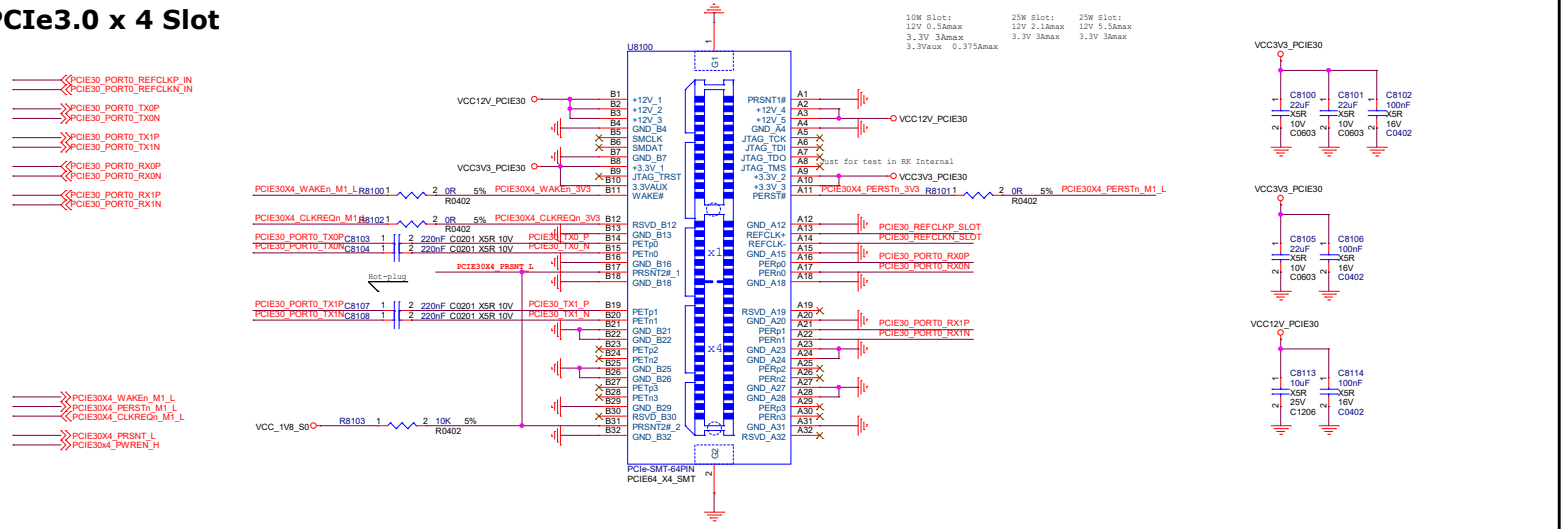

CLOCK GENERATOR POWER

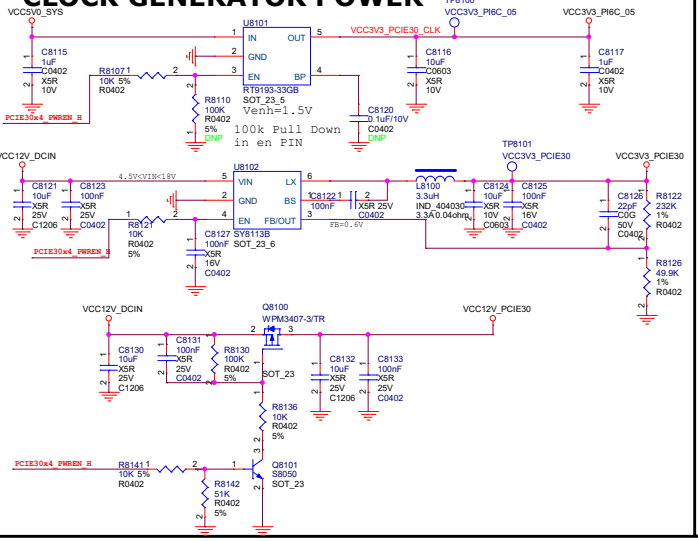

CLOCK GENERATOR

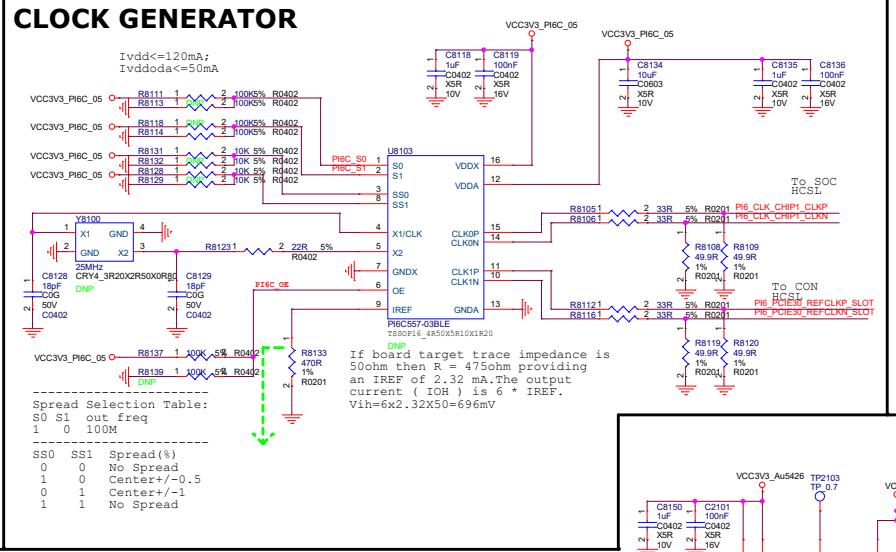

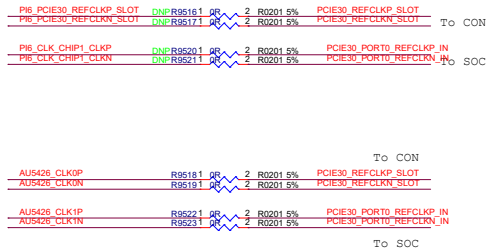

CLOCK GENERATOR

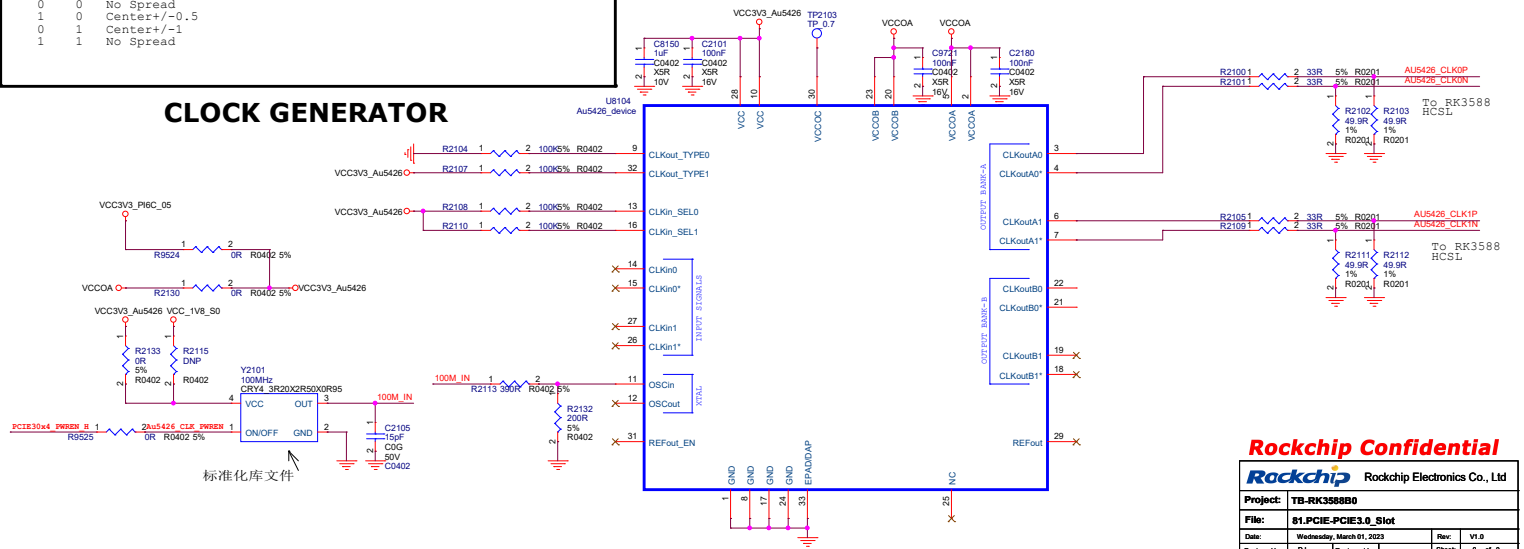

Rockchip Confidential

Rockchip	Rockchip Electronics Co., Ltd		
Project:	TB-RK3588B0		
File:	81.PCIE-PCIE3.0_Slot		
Date:	Wednesday, March 01, 2023	Rev:	V1.0
Designed by: DJ	Reviewed by:	Sheet:	0 of 0

SATA3.0

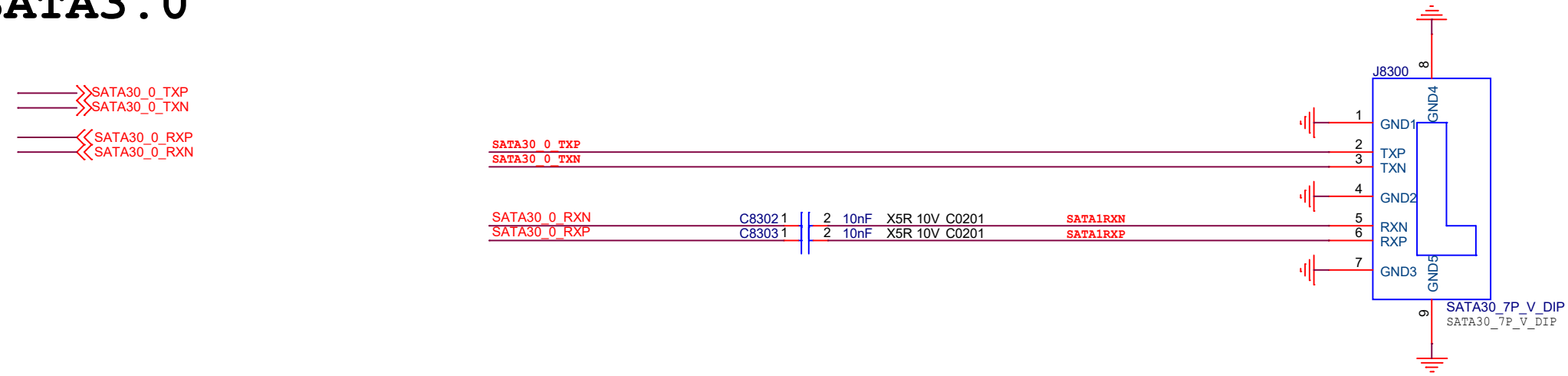

SATA_POWER

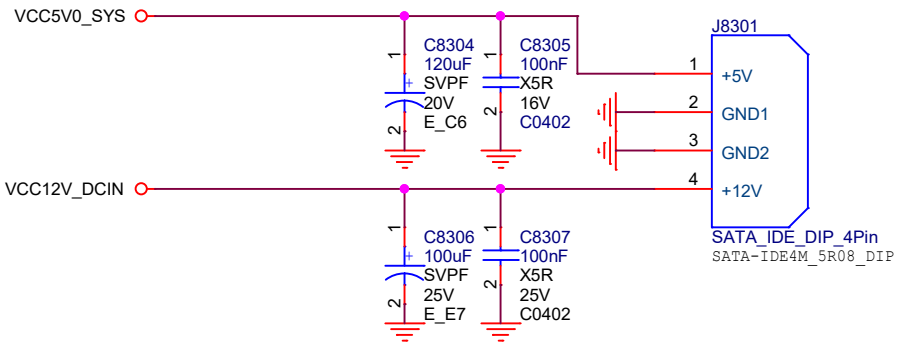

Rockchip Confidential

Rockchip	Rockchip Electronics Co., Ltd				
Project:	TB-RK3588B0				
File:	83.SATA-SATA3.0 Slot_7P				
Date:	Tuesday, February 28, 2023			Rev:	V1.0
Designed by:	DJ	Reviewed by:	Default	Sheet:	0 of 0

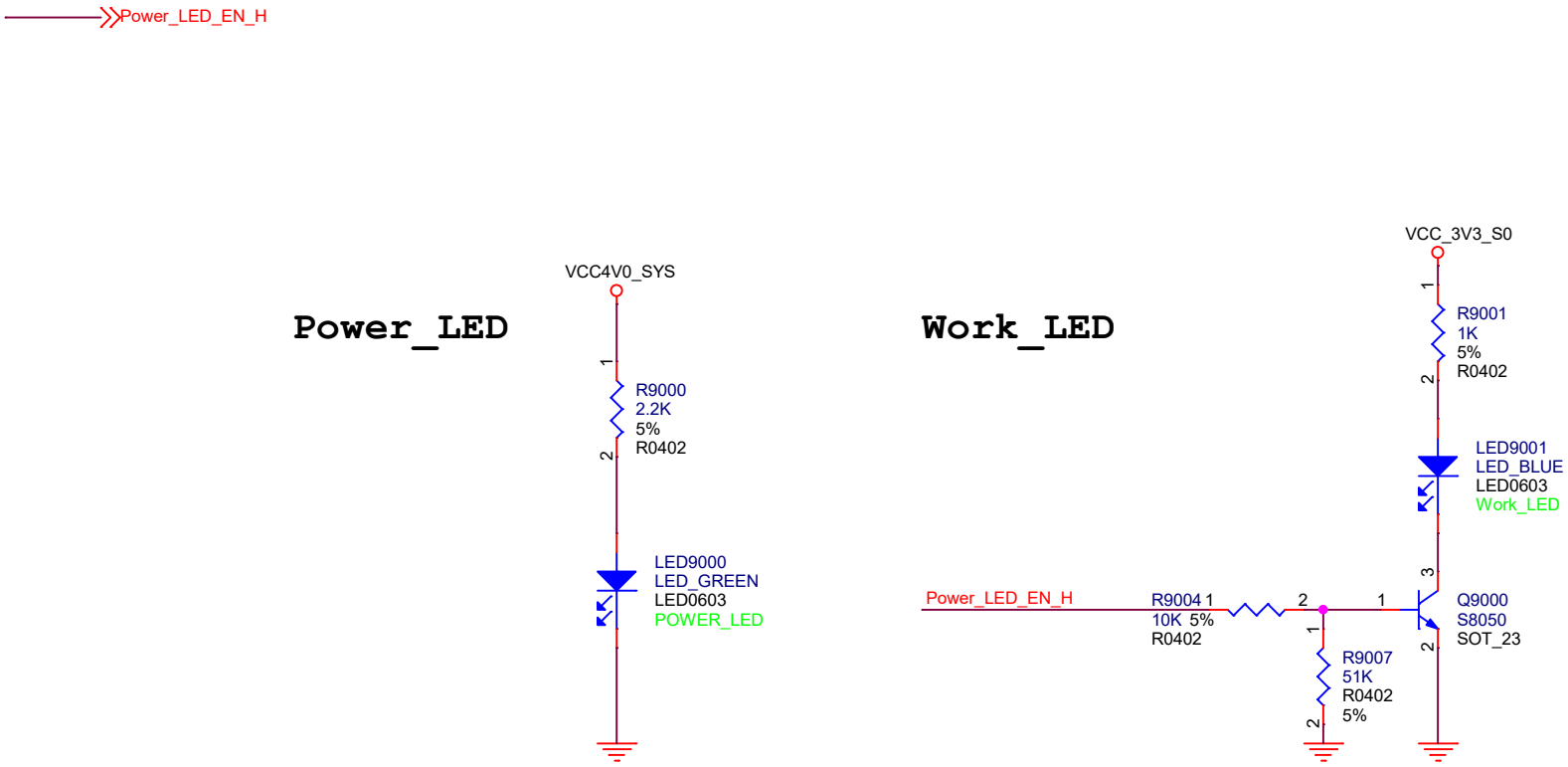

Rockchip Confidential

Rockchip Electronics Co., Ltd					
Project:	TB-RK3588B0				
File:	90.LED				
Date:	Tuesday, February 28, 2023			Rev:	V1.0
Designed by:	DJ	Reviewed by:		Sheet:	0 of 0

KEY

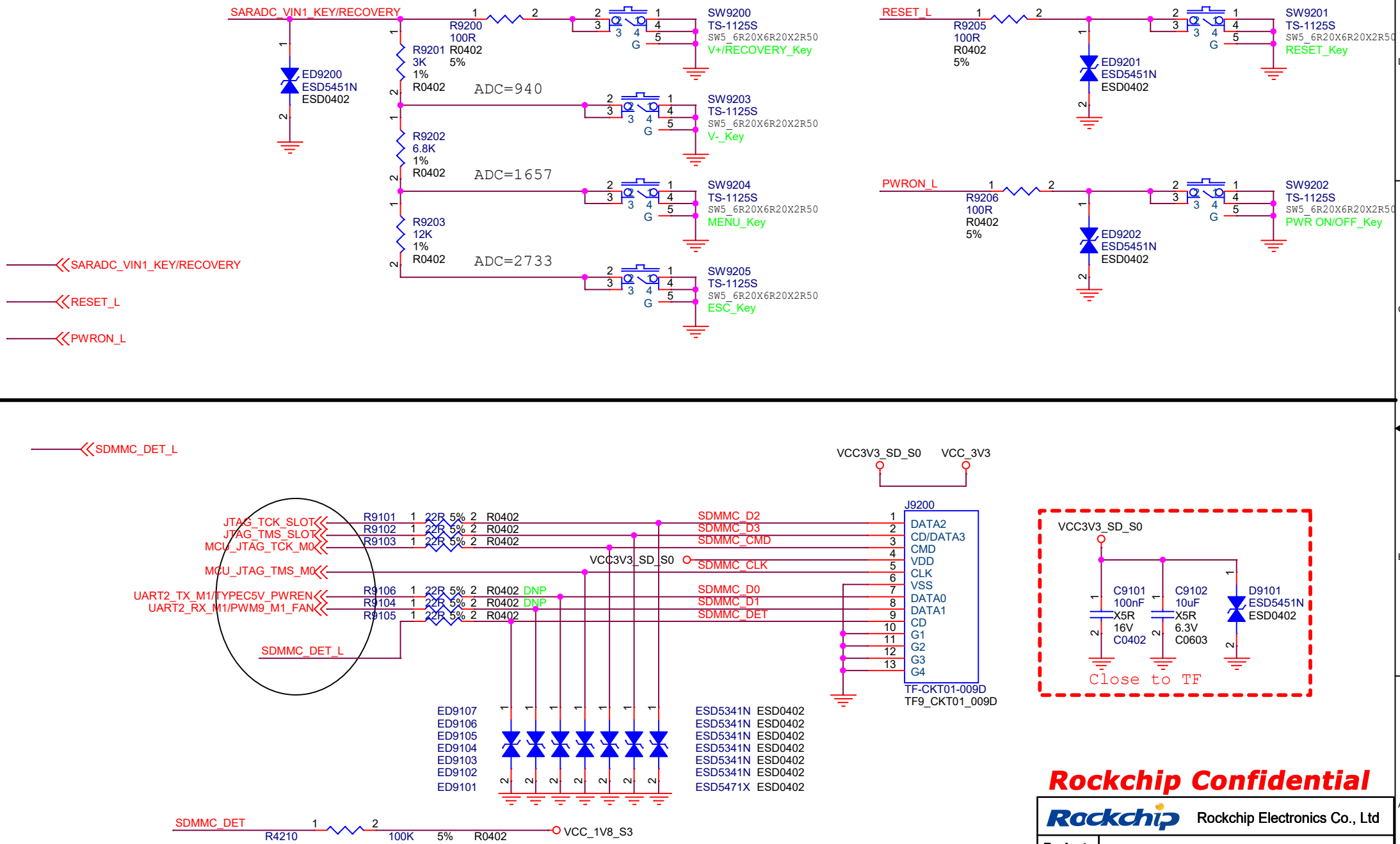

Rockchip Confidential

Rockchip Electronics Co., Ltd			
Project:	TB-RK3588B0		
File:	92.KEY Array/ TF Card		
Date:	Tuesday, February 28, 2023	Rev:	V1.0
Designed by: DJ	Reviewed by:	Sheet:	0 of 0

UART TO USB(DEBUG)

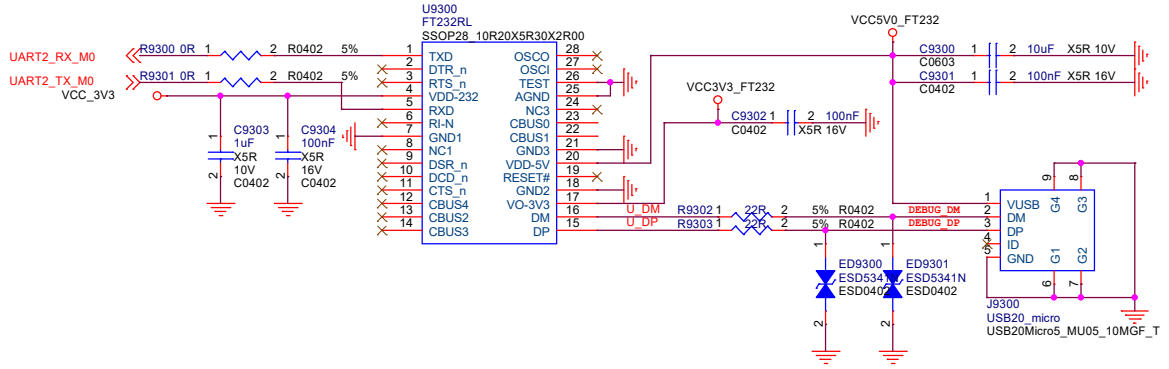

CAN

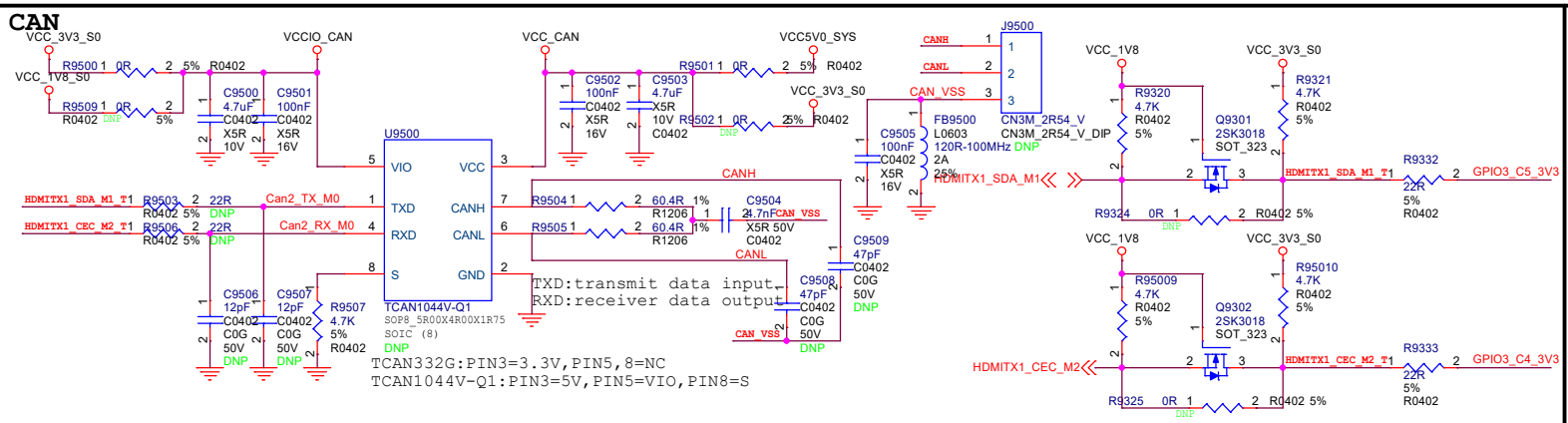

HW_ID

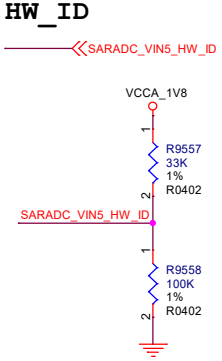

SARADC_VIN1	Up Resistance	Down Resistance	AD value
HW_ID0	10K	DNP	4095
HW_ID1	10K	110K	3754
HW_ID2	20K	100K	3413
HW_ID3	33K	100K	3079
HW_ID4	18K	36K	2730
HW_ID5	36K	51K	2400
HW_ID6	51K	51K	2048
HW_ID7	51K	36K	1695
HW_ID8	36K	18K	1365
HW_ID9	100K	33K	1016
HW_ID10	100K	20K	683
HW_ID11	110K	10K	341
HW_ID12	DNP	10K	0

Interface----20pin

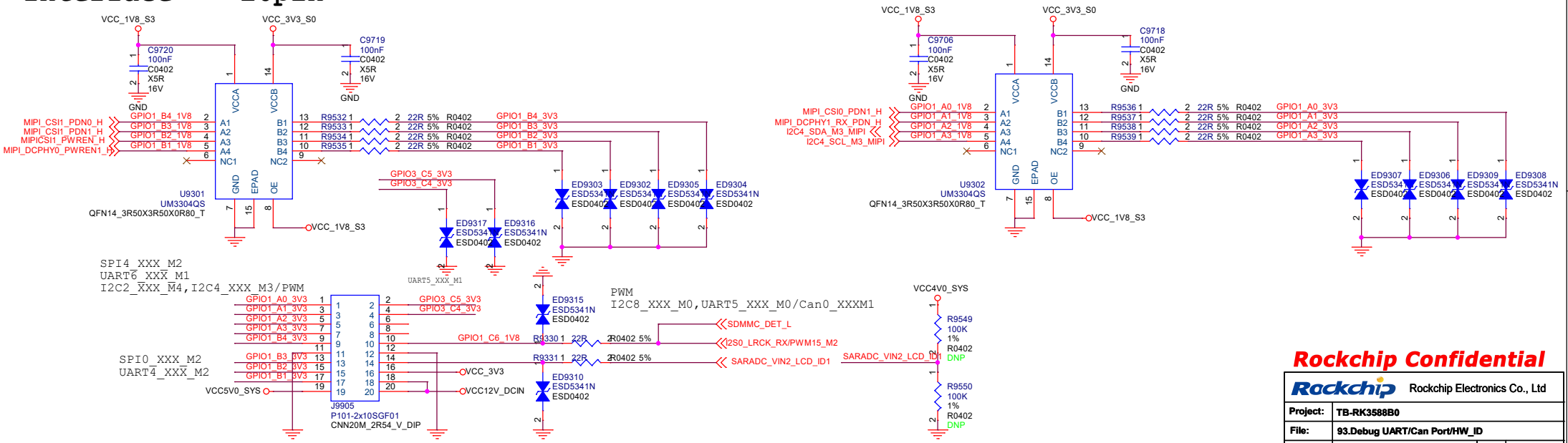

Rockchip Confidential

Rockchip	Rockchip Electronics Co., Ltd		
Project:	TB-RK3588B0		
File:	93.Debug UART/Can Port/HW_ID		
Date:	Tuesday, February 28, 2023	Rev:	V1.0
Designed by: DJ	Reviewed by:	Sheet:	0 of 0

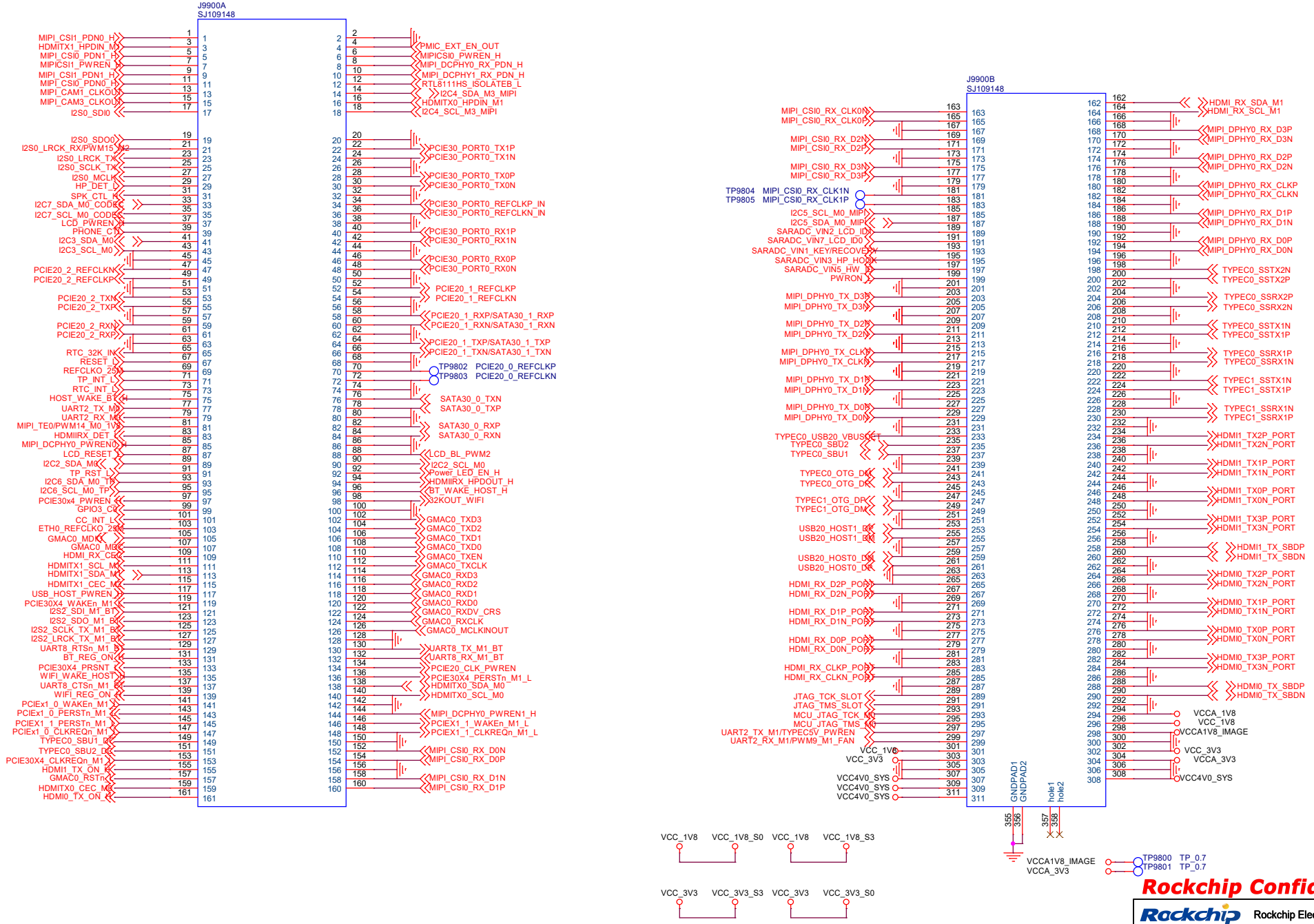

Rockchip Confidential

Rockchip Electronics Co., Ltd			
Project:	TB-RK3588B0		
File:	98.Golden_Finger		
Date:	Tuesday, February 28, 2023	Rev:	V1.0
Designed by: DJ	Reviewed by:	Sheet:	0 of 0

Mark

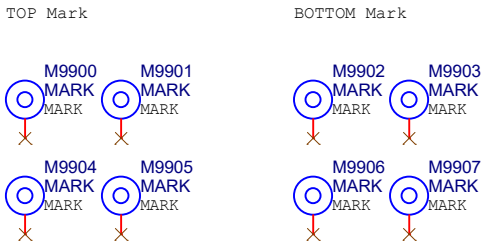

GND GATE

HOLE

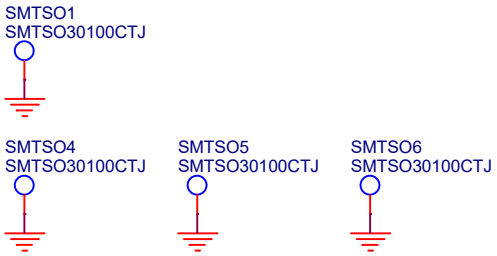

CAMERA HOLE

golden finger

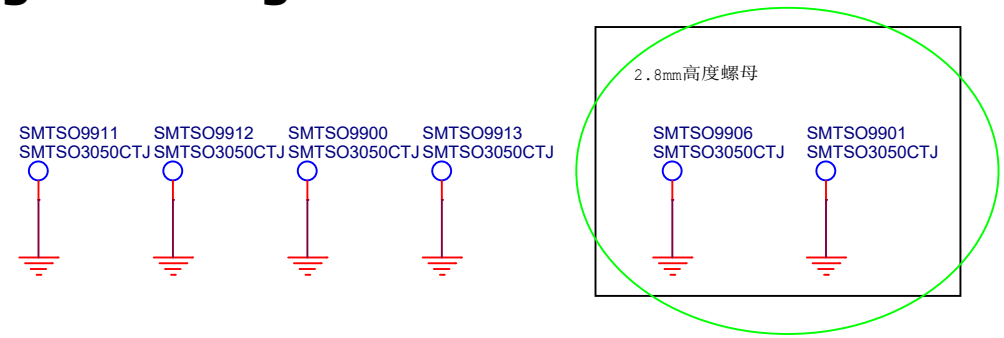

Rockchip Confidential

Rockchip Electronics Co., Ltd					
Project:	TB-RK3588B0				
File:	99.Mark/Hole/Heatsink				
Date:	Wednesday, March 01, 2023			Rev:	V1.0
Designed by:	DJ	Reviewed by:		Sheet:	0 of 0