Schematics For RK3588 CoreBoard

Main Functions Introduction

1) PMIC: RK806-1+DiscretePower
2) RAM: 2 x LPDDR4x 32Bit(Option 2 x LPDDR4 32bit)
3) ROM: eMMC5.1
4) Support: 2 x USB3.0 HOST + 2 x USB2.0 HOST
5) Support: 1 x SATA3.0 Connector (7pin)
6) Support: 1 x 4Lanes PCIe Connector
7) Support: 2 x HDMI2.1 TX + 1 x HDMI2.0 TX (optional eDP)
8) Support: 1 x HDMI IN
9) Support: 2 x 4Lanes MIPI CSI RX Camera Connector
10) Support: 2 x 10/100/1000 Ethernet(RGMII)
11) Support: 1 x Line Out, 1 x Line In
12) Support: 1 x SPK
13) Support: 1 x 20pin
14) Support: 1 x Power LED,1 x Ethernet LED,1 x work LED
15) Support: 1 x Recovery Key,1x Reset Key
16) Support: 1 x
17) Support: 1 x
18) Support: 1 x UART
19) Support: Debug UART(USB to UART)

Rockchip Confidential

Rockchip	Rockchip Electronics Co., Ltd				
Project:	TB_RK3588_CoreBoard				
File:	00.Cover Page				
Date:	Wednesday, March 30, 2022			Rev:	V1.0
Designed by:	DJ	Reviewed by:	Default	Sheet:	1 of 43

Table of Content

Page 1	00.Cover Page
Page 2	01.Index and Notes
Page 3	02.Revision History
Page 4	03.Block Diagram
Page 5	04.Power Tree
Page 6	05.Power Sequence/IO Domain Map
Page 7	06.Lower-Speed Bus Map
Page 8	07.USB/DP Configure Map
Page 9	08.PCIE Fun Map
Page 10	10.RK3588_Power/GND
Page 11	11.RK3588_OSC/PLL/PMUIO
Page 12	12.RK3588 DDR Controler
Page 13	13.RK3588_Flash/SD Controller
Page 14	14.RK3588_USB30/USB20_Ctrl
Page 15	15.RK3588_SARADC/1.8V Only GPIO
Page 16	16.RK3588_MIPI Interface
Page 17	17.RK3588_HDMI/eDP Interface
Page 18	18.RK3588_PCIE30/PCIE20/SATA30
Page 19	19.RK3588_1.8V/ 3.3V GPIO
Page 20	20.Power_DC IN
Page 21	21.Power-PMIC_RK806-1
Page 22	22.Power_Ext Discrete/RTC IC
Page 23	
Page 24	38.DRAM-LPDDR4X_200P_1X32bit
Page 25	40.Flash-eMMC Flash
Page 26	
Page 27	
Page 28	
Page 29	
Page 30	
Page 31	
Page 32	
Page 33	
Page 34	
Page 35	
Page 36	
Page 37	
Page 38	
Page 39	
Page 40	
Page 41	
Page 42	98.Power Test
Page 43	99.Mark/Hole/Heatsink
Page 44	
Page 45	
Page 46	
Page 47	
Page 48	
Page 49	
Page 50	
Page 51	
Page 52	
Page 53	

Generate Bill of Materials

Header:

Item\tPart\tDescription\tPCB Footprint\tReference\tQuantity\tOption

Combined property string:

{Item}\t{Value}\t{Description}\t{PCB Footprint}\t{Reference}\t{Quantity}\t{Option}

Description

Note

Option

Notes

NOTE 1:
Component parameter description
1. DNP stands for component not mounted temporarily
2. If Value or option is DNP, which means the area is reserved without being mounted

NOTE 2:
Please use our recommended components to avoid too many changes.
For more informations about the second source,please refer to our AVL.

Rockchip Confidential

Rockchip	Rockchip Electronics Co., Ltd				
Project:	TB_RK3588_CoreBoard				
File:	01.Index and Notes				
Date:	Friday, December 17, 2021			Rev:	V1.0
Designed by:	DJ	Reviewed by:	Default	Sheet:	2 of 43

Revision History

Version	Date	By	Change Dsecription	Approved
V1.1	2021-12-17	DJ	1:Revision preliminary version	

Rockchip Confidential

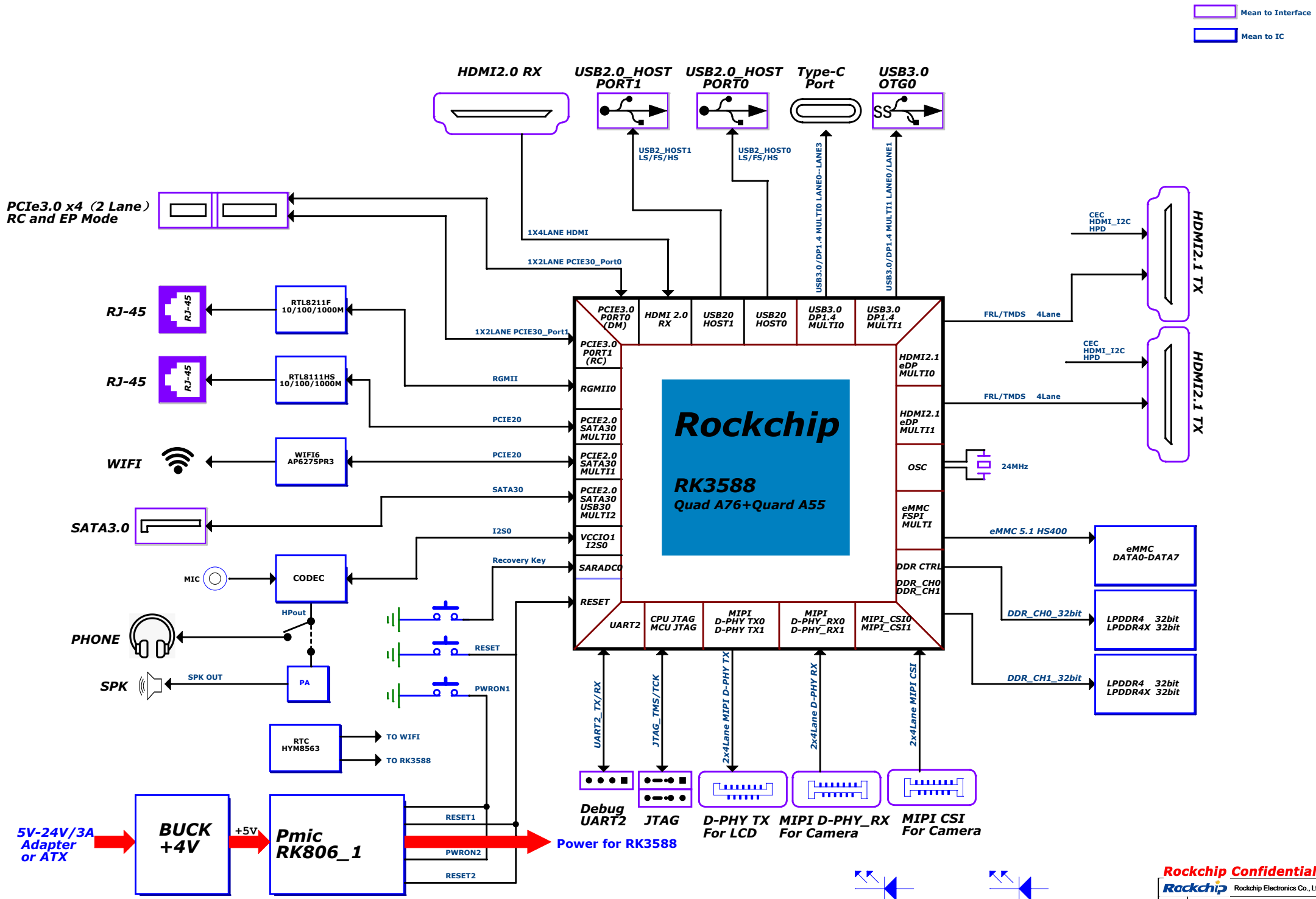
Mean to Interface
Mean to IC
HDMI2.0 RX
USB2.0_HOST PORT1
USB2.0_HOST PORT0
Type-C Port
USB3.0 OTG0
USB2_HOST1 LS/FS/HS
USB2_HOST0 LS/FS/HS
USB3.0/DP1.4 MULTI0 LANE0~LANE3
USB3.0/DP1.4 MULTI1 LANE0/LANE1
PCIe3.0 x4（2 Lane） RC and EP Mode
1X4LANE HDMI
1X2LANE PCIE30_Port0
1X2LANE PCIE30_Port1
RJ-45
RTL8211F 10/100/1000M
RJ-45
RTL8111HS 10/100/1000M
RGMII
PCIE20
WIFI
WIFI6 AP6275PR3
PCIE20
SATA30
SATA3.0
I2S0
MIC
CODEC
Recovery Key
HPout
PHONE
RESET
SPK
SPK OUT
PA
PWRON1
RTC HYM8563
TO WIFI
TO RK3588
5V-24V/3A Adapter or ATX
BUCK +4V
+5V
Pmic RK806_1
RESET1
PWRON2
RESET2
Power for RK3588
PCIE3.0 P0RT0 (DM)
HDMI 2.0 RX
USB20 HOST1
USB20 HOST0
USB3.0 DP1.4 MULTI0
USB3.0 DP1.4 MULTI1
PCIE3.0 P0RT1 (RC)
RGMII0
PCIE2.0 SATA30 MULTI0
PCIE2.0 SATA30 MULTI1
PCIE2.0 SATA30 USB30 MULTI2
VCCIO1 I2S0
SARADC0
RESET
HDMI2.1 eDP MULTI0
HDMI2.1 eDP MULTI1
OSC
eMMC FSPI MULTI
DDR CTRL
DDR_CH0 DDR_CH1
UART2
CPU JTAG MCU JTAG
MIPI D-PHY TX0 D-PHY TX1
MIPI D-PHY_RX0 D-PHY_RX1
MIPI_CSI0 MIPI_CSI1
Rockchip
RK3588
Quad A76+Quard A55
CEC HDMI_I2C HPD
HDMI2.1 TX
FRL/TMDS 4Lane
CEC HDMI_I2C HPD
HDMI2.1 TX
FRL/TMDS 4Lane
24MHz
eMMC 5.1 HS400
eMMC DATA0-DATA7
DDR_CH0_32bit
LPDDR4 32bit LPDDR4X 32bit
DDR_CH1_32bit
LPDDR4 32bit LPDDR4X 32bit
UART2_TX/RX
JTAG_TMS/TCK
2x4Lane MIPI D-PHY TX
2x4Lane D-PHY RX
2x4Lane MIPI CSI
Debug UART2
JTAG
D-PHY TX For LCD
MIPI D-PHY_RX For Camera
MIPI CSI For Camera
Work LED
Power LED
Rockchip Confidential
Rockchip Electronics Co., Ltd
Project: TB_RK3588_CoreBoard
File: 03.Block Diagram
Date: Wednesday, March 30, 2022
Rev: V1.0
Designed by: DJ
Reviewed by: Default
Sheet: 4 of 43

Power Tree

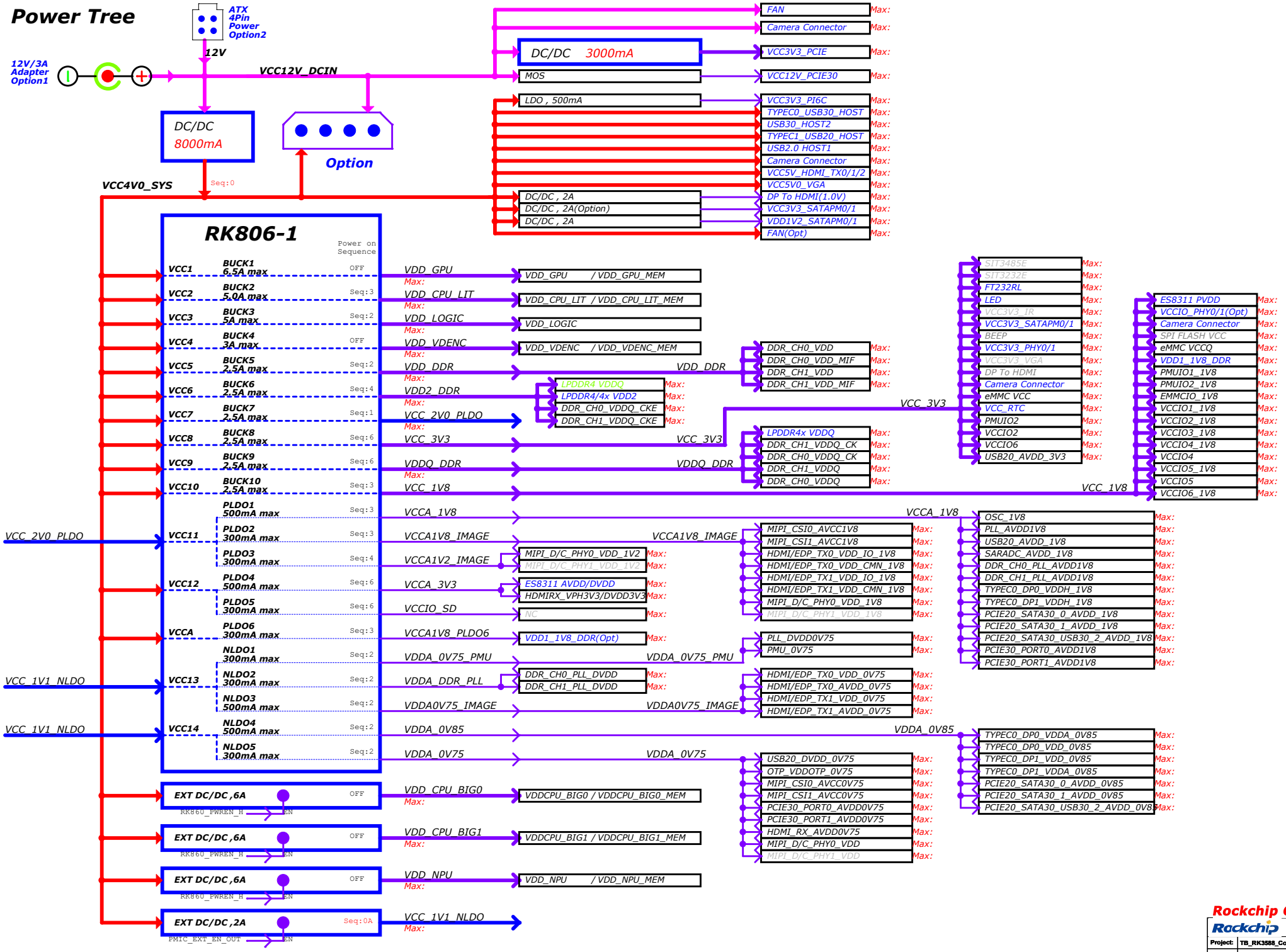

Rockchip Confidential

Rockchip Electronics Co., Ltd			
Project:	TB_RK3588_CoreBoard		
File:	04.Power Tree		
Date:	Wednesday, March 30, 2022	Rev:	V1.0
Designed by: DJ	Reviewed by: Default	Sheet:	5 of 43

Power Sequence

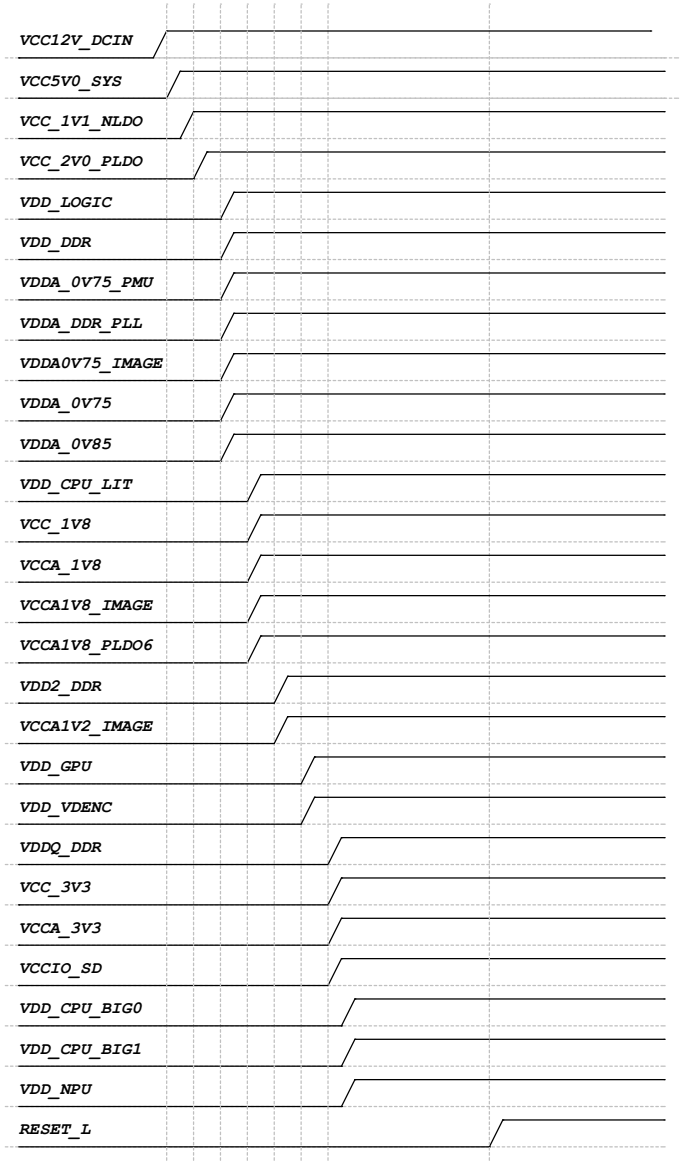

Power description

Power Supply	PMIC Channel	Supply Limit	Power Name	Time Slot	Default Voltage	Default ON/OFF	Work Voltage	Peak Current	Sleep Current
VCC4V0_SYS	RK806_BUCK1	6.5A	VDD_GPU	Slot:5	0.75V	ON	DVFS	TBD	TBD
VCC4V0_SYS	RK806_BUCK2	5A	VDD_CPU_LIT	Slot:3	0.75V	ON	DVFS	TBD	TBD
VCC4V0_SYS	RK806_BUCK3	5A	VDD_LOGIC	Slot:2	0.75V	ON	0.75V	TBD	TBD
VCC4V0_SYS	RK806_BUCK4	5A	VDD_VDENC	Slot:5	0.75V	ON	DVFS	TBD	TBD
VCC4V0_SYS	RK806_BUCK5	2.5A	VDD_DDR	Slot:2	0.85V	ON	0.85V DVFS	TBD	TBD
VCC4V0_SYS	RK806_BUCK6	2.5A	VDD2_DDR	Slot:4	ADJ FB=0.5V	ON	1.1V LPDDR4/4x	TBD	TBD
VCC4V0_SYS	RK806_BUCK7	2.5A	VCC_2V0_PLDO	Slot:1	2.0V	ON	2.0V	TBD	TBD
VCC4V0_SYS	RK806_BUCK8	2.5A	VCC_3V3	Slot:6	3.3V	ON	3.3V	TBD	TBD
VCC4V0_SYS	RK806_BUCK9	2.5A	VDDQ_DDR	Slot:6	ADJ FB=0.5V	ON	0.6V LPDDR4/4x	TBD	TBD
VCC4V0_SYS	RK806_BUCK10	2.5A	VCC_1V8	Slot:3	1.8V	ON	1.8V	TBD	TBD
VCC_2V0_PLDO	RK806_PLDO1	0.5A	VCCA_1V8	Slot:3	1.8V	ON	1.8V	TBD	TBD
	RK806_PLDO2	0.3A	VCCA1V8_IMAGE	Slot:3	1.8V	ON	1.8V	TBD	TBD
	RK806_PLDO3	0.3A	VCCA1V2_IMAGE	Slot:4	1.2V	ON	1.2V	TBD	TBD
VCC4V0_SYS	RK806_PLDO4	0.5A	VCCA_3V3	Slot:6	3.3V	ON	3.3V	TBD	TBD
	RK806_PLDO5	0.3A	VCCIO_SD	Slot:6	3.3V	ON	3.3V	TBD	TBD
VCC4V0_SYS	RK806_PLDO6	0.3A	VCCA1V8_PLDO6	Slot:3	1.8V	ON	1.8V	TBD	TBD
VCC_1V1_NLDO	RK806_NLDO1	0.3A	VDDA_0V75_PMU	Slot:2	0.75V	ON	0.75V	TBD	TBD
	RK806_NLDO2	0.3A	VDDA_DDR_PLL	Slot:2	0.85V	ON	0.85V DVFS	TBD	TBD
	RK806_NLDO3	0.5A	VDDA0V75_IMAGE	Slot:2	0.75V	ON	0.75V	TBD	TBD
VCC_1V1_NLDO	RK806_NLDO4	0.5A	VDDA_0V85	Slot:2	0.85V	ON	0.85V	TBD	TBD
	RK806_NLDO5	0.3A	VDDA_0V75	Slot:2	0.75V	ON	0.75V	TBD	TBD
	RK806_RESETn								
VCC12V_DCIN	EXT BUCK	8A	VCC4V0_SYS	Slot:0	4.0V	ON	4.0V	TBD	TBD
VCC4V0_SYS	EXT BUCK	2A	VCC_1V1_NLDO	Slot:0A	1.1V	ON	1.1V	TBD	TBD
VCC12V_DCIN	EXT BUCK	3A	VCC5V0_SYS	Slot:0A	5.2V	ON	5.2V	TBD	TBD
VCC4V0_SYS	RK860-2	6A	VDD_CPU_BIG0	Slot:6A	0.8V	ON	DVFS	TBD	TBD
VCC4V0_SYS	RK860-3	6A	VDD_CPU_BIG1	Slot:6A	0.8V	ON	DVFS	TBD	TBD
VCC4V0_SYS	RK860-2	6A	VDD_NPU	Slot:6A	0.8V	ON	DVFS	TBD	TBD

IO Power Domain Map

IO Domain	Pin Num	Support IO Voltage	Supply Power Pin Name	Power Source	Operating Voltage
PMUIO1	Pin N28	1.8V Only	PMUIO1_1V8	VCC_1V8	1.8V
PMUIO2	Pin R27 Pin P28	1.8V or 3.3V	PMUIO2_1V8 PMUIO2	VCC_1V8 VCC_3V3	3.3V
EMMCIO	Pin V26	1.8V Only	EMMCIO_1V8	VCC_1V8	1.8V
VCCIO1	Pin G20	1.8V Only	VDDIO1_1V8	VCC_1V8	1.8V
VCCIO2	Pin AA7 Pin Y7	1.8V or 3.3V	VDDIO2_1V8 VCCIO2	VCC_1V8 VCC_3V3	3.3V
VCCIO3	Pin Y26	1.8V Only	VDDIO3_1V8	VCC_1V8	1.8V
VCCIO4	Pin H20 Pin H21	1.8V or 3.3V	VDDIO4_1V8 VCCIO4	VCC_1V8 VCC_1V8	1.8V
VCCIO5	Pin W25 Pin W26	1.8V or 3.3V	VDDIO5_1V8 VCCIO5	VCC_1V8 VCC_3V3	3.3V
VCCIO6	Pin AC25 Pin AC26	1.8V or 3.3V	VDDIO6_1V8 VCCIO6	VCC_1V8 VCC_3V3	3.3V

IO Type	Operating Voltage
1.8V Only	VCCIO*_1V8=1.8V
1.8V or 3.3V	VCCIO*_1V8=1.8V VCCIO*=1.8V or 3.3V

Rockchip Confidential

I2C MAP

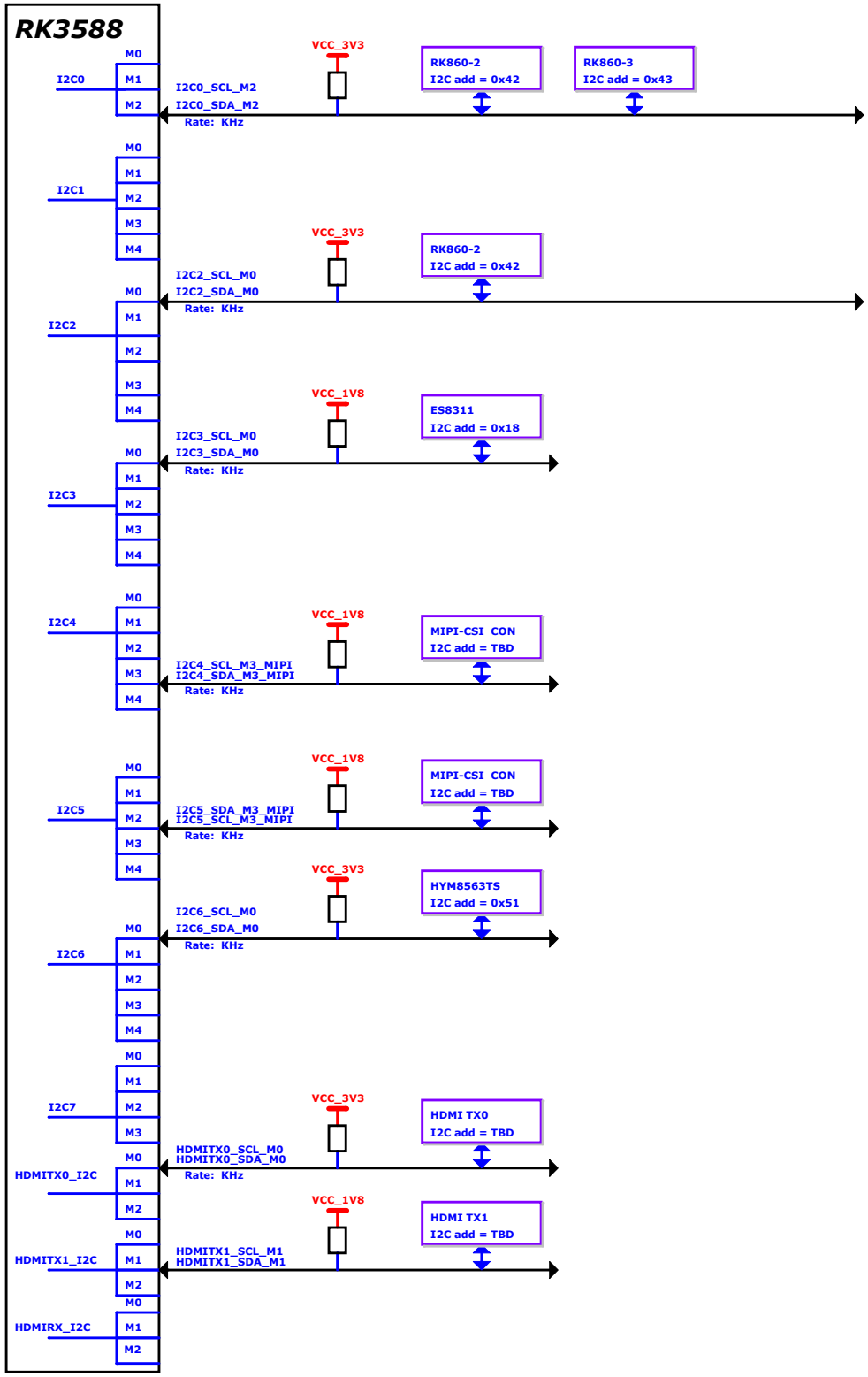

UART MAP

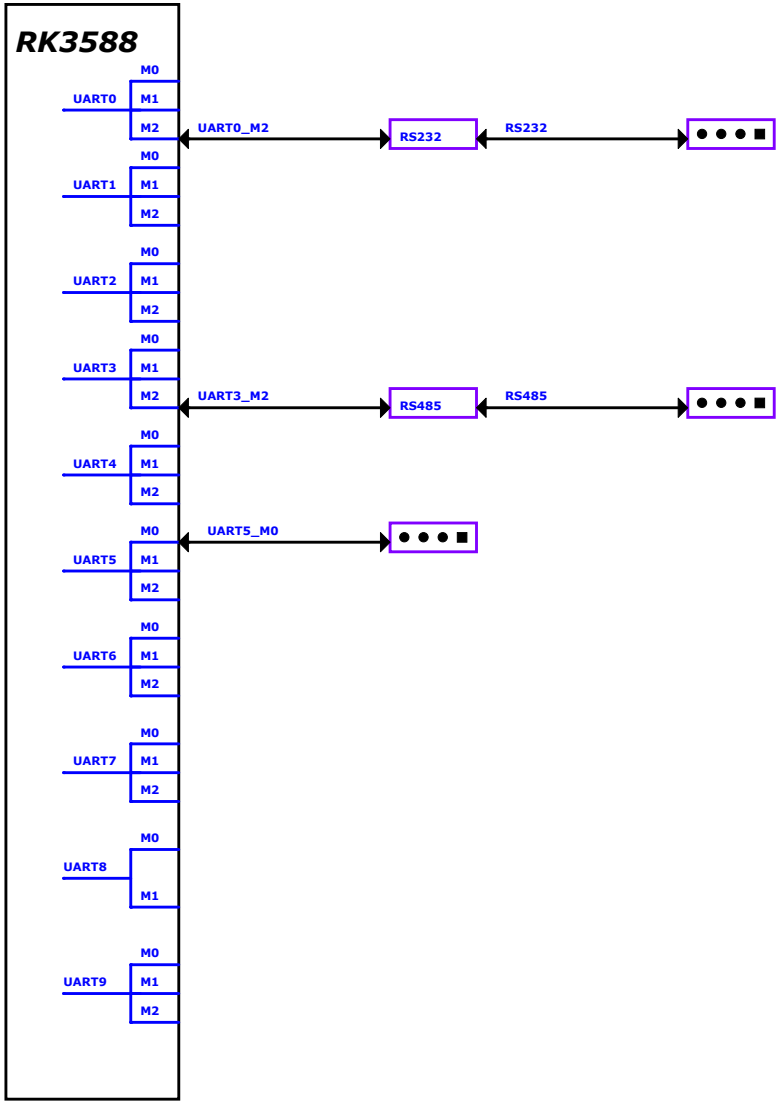

Rockchip Confidential

Rockchip Electronics Co., Ltd			
Project:	TB_RK3588_CoreBoard		
File:	05.Lower-Speed Bus Map		
Date:	Friday, December 17, 2021	Rev:	V1.0
Designed by: DJ	Reviewed by:	Sheet:	7 of 43

USB Controller Configure Table

Controller Name	Pin Name	Type-C Function	DPx4Lane Function		USB30 HOST+DPx2Lane Function		USB20 HOST+DPx2Lane Function		USB20 HOST+DPx4Lane Function	
			OPTION1	OPTION2	OPTION1	OPTION2	OPTION1	OPTION2	OPTION1	OPTION2
USB30 OTG0 Device or Host	TYPEC0_SBU1/DP0_AUXP TYPEC0_SBU2/DP0_AUXN	TYPEC0_SBU1 TYPEC0_SBU2	DP0_AUXP DP0_AUXN	DP0_AUXP DP0_AUXN	DP0_AUXP DP0_AUXN	DP0_AUXP DP0_AUXN	DP0_AUXP DP0_AUXN	DP0_AUXP DP0_AUXN	DP0_AUXP DP0_AUXN	DP0_AUXP DP0_AUXN
	TYPEC0_SSRX1P/DP0_TX0P TYPEC0_SSRX1N/DP0_TX0N	TYPEC0_SSRX1P TYPEC0_SSRX1N	DP0_TX0P DP0_TX0N	DP0_TX2P DP0_TX2N	TYPEC0_SSRX1P TYPEC0_SSRX1N	DP0_TX0P DP0_TX0N	DP0_TX0P DP0_TX0N		DP0_TX0P DP0_TX0N	DP0_TX2P DP0_TX2N
	TYPEC0_SSTX1P/DP0_TX1P TYPEC0_SSTX1N/DP0_TX1N	TYPEC0_SSTX1P TYPEC0_SSTX1N	DP0_TX1P DP0_TX1N	DP0_TX3P DP0_TX3N	TYPEC0_SSTX1P TYPEC0_SSTX1N	DP0_TX1P DP0_TX1N	DP0_TX1P DP0_TX1N		DP0_TX1P DP0_TX1N	DP0_TX3P DP0_TX3N
	TYPEC0_SSRX2P/DP0_TX2P TYPEC0_SSRX2N/DP0_TX2N	TYPEC0_SSRX2P TYPEC0_SSRX2N	DP0_TX2P DP0_TX2N	DP0_TX0P DP0_TX0N	DP0_TX2P DP0_TX2N	TYPEC0_SSRX2P TYPEC0_SSRX2N		DP0_TX2P DP0_TX2N	DP0_TX2P DP0_TX2N	DP0_TX0P DP0_TX0N
	TYPEC0_SSTX2P/DP0_TX3P TYPEC0_SSTX2N/DP0_TX3N	TYPEC0_SSTX2P TYPEC0_SSTX2N	DP0_TX3P DP0_TX3N	DP0_TX1P DP0_TX1N	DP0_TX3P DP0_TX3N	TYPEC0_SSTX2P TYPEC0_SSTX2N		DP0_TX3P DP0_TX3N	DP0_TX3P DP0_TX3N	DP0_TX1P DP0_TX1N
USB20 OTG0 Device or Host	TYPEC0_USB20_OTG_DP TYPEC0_USB20_OTG_DM	TYPEC0_USB20_OTG_DP TYPEC0_USB20_OTG_DM			TYPEC0_USB20_OTG_DP TYPEC0_USB20_OTG_DM	TYPEC0_USB20_OTG_DP TYPEC0_USB20_OTG_DM	TYPEC0_USB20_OTG_DP TYPEC0_USB20_OTG_DM	TYPEC0_USB20_OTG_DP TYPEC0_USB20_OTG_DM	TYPEC0_USB20_OTG_DP TYPEC0_USB20_OTG_DM	TYPEC0_USB20_OTG_DP TYPEC0_USB20_OTG_DM
USB30 OTG1 Device or Host	TYPEC1_SBU1/DP1_AUXP TYPEC1_SBU2/DP1_AUXN	TYPEC1_SBU1 TYPEC1_SBU2	DP1_AUXP DP1_AUXN	DP1_AUXP DP1_AUXN	DP1_AUXP DP1_AUXN	DP1_AUXP DP1_AUXN	DP1_AUXP DP1_AUXN	DP1_AUXP DP1_AUXN	DP1_AUXP DP1_AUXN	DP1_AUXP DP1_AUXN
	TYPEC1_SSRX1P/DP1_TX0P TYPEC1_SSRX1N/DP1_TX0N	TYPEC1_SSRX1P TYPEC1_SSRX1N	DP1_TX0P DP1_TX0N	DP1_TX2P DP1_TX2N	TYPEC1_SSRX1P TYPEC1_SSRX1N	DP1_TX0P DP1_TX0N	DP1_TX0P DP1_TX0N		DP1_TX0P DP1_TX0N	DP1_TX2P DP1_TX2N
	TYPEC1_SSTX1P/DP1_TX1P TYPEC1_SSTX1N/DP1_TX1N	TYPEC1_SSTX1P TYPEC1_SSTX1N	DP1_TX1P DP1_TX1N	DP1_TX3P DP1_TX3N	TYPEC1_SSTX1P TYPEC1_SSTX1N	DP1_TX1P DP1_TX1N	DP1_TX1P DP1_TX1N		DP1_TX1P DP1_TX1N	DP1_TX3P DP1_TX3N
	TYPEC1_SSRX2P/DP1_TX2P TYPEC1_SSRX2N/DP1_TX2N	TYPEC1_SSRX2P TYPEC1_SSRX2N	DP1_TX2P DP1_TX2N	DP1_TX0P DP1_TX0N	DP1_TX2P DP1_TX2N	TYPEC1_SSRX2P TYPEC1_SSRX2N		DP1_TX2P DP1_TX2N	DP1_TX2P DP1_TX2N	DP1_TX0P DP1_TX0N
	TYPEC1_SSTX2P/DP1_TX3P TYPEC1_SSTX2N/DP1_TX3N	TYPEC1_SSTX2P TYPEC1_SSTX2N	DP1_TX3P DP1_TX3N	DP1_TX1P DP1_TX1N	DP1_TX3P DP1_TX3N	TYPEC1_SSTX2P TYPEC1_SSTX2N		DP1_TX3P DP1_TX3N	DP1_TX3P DP1_TX3N	DP0_TX1P DP0_TX1N
USB20 OTG1 Device or Host	TYPEC1_USB20_OTG_DP TYPEC1_USB20_OTG_DM	TYPEC1_USB20_OTG_DP TYPEC1_USB20_OTG_DM			TYPEC1_USB20_OTG_DP TYPEC1_USB20_OTG_DM	TYPEC1_USB20_OTG_DP TYPEC1_USB20_OTG_DM	TYPEC1_USB20_OTG_DP TYPEC1_USB20_OTG_DM	TYPEC1_USB20_OTG_DP TYPEC1_USB20_OTG_DM	TYPEC1_USB20_OTG_DP TYPEC1_USB20_OTG_DM	TYPEC1_USB20_OTG_DP TYPEC1_USB20_OTG_DM
USB30 OTG2 Device or Host			OPTION1 USB30 HOST		OPTION2 USB30 HOST	USB30 OTG or Device				
	PCIE20_2_TXP/SATA30_2_TXP/USB30_2_SSTXP PCIE20_2_TXN/SATA30_2_TXN/USB30_2_SSTXN		USB30_2_SSTXP USB30_2_SSTXN		USB30_2_SSTXP USB30_2_SSTXN	USB30_2_SSTXP USB30_2_SSTXN				
	PCIE20_2_RXP/SATA30_2_RXP/USB30_2_SSRXP PCIE20_2_RXN/SATA30_2_RXN/USB30_2_SSRXN		USB30_2_SSRXP USB30_2_SSRXN		USB30_2_SSRXP USB30_2_SSRXN	USB30_2_SSRXP USB30_2_SSRXN				
USB20 HOST0	USB20_HOST0_DP USB20_HOST0_DM		USB20_HOST0_DP USB20_HOST0_DM							
USB20 HOST1	USB20_HOST1_DP USB20_HOST1_DM				USB20_HOST1_DP USB20_HOST1_DM					
						TYPEC1_USB20_OTG_DP TYPEC1_USB20_OTG_DM				

Note:
DP Lane swap enable
0:Lane0/1/2/3 TxData mapping to Lane0/1/2/3_TXDP/N
1:Lane0/1/2/3 TxData mapping to Lane2/3/0/1_TXDP/N

USB3.0/DP1.4 Lane Diagram

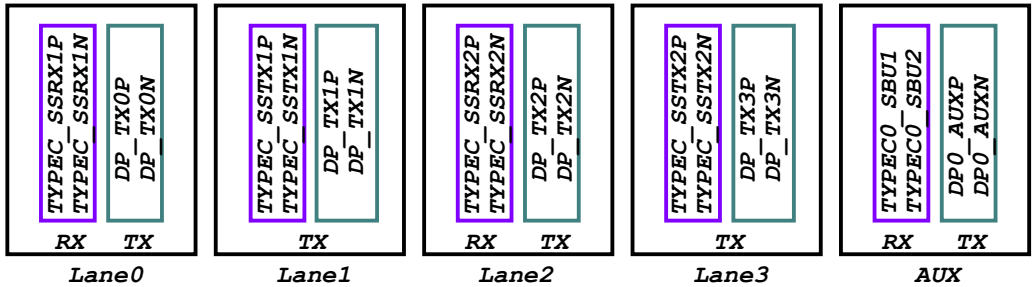

TYPE-C Connector Diagram

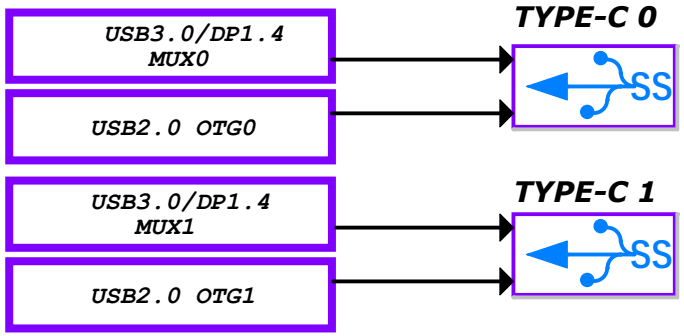

Rockchip Confidential

Rockchip	Rockchip Electronics Co., Ltd		
Project:	TB_RK3588_CoreBoard		
File:	07.USB/DP Configure Map		
Date:	Friday, December 17, 2021	Rev:	V1.0
Designed by: DJ	Reviewed by:	Sheet:	8 of 43

PCIe3.0 REFCLK

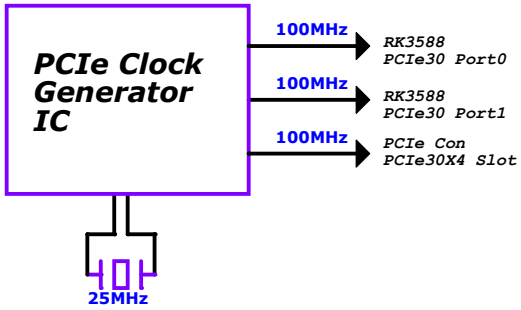

PCIe2.0 REFCLK

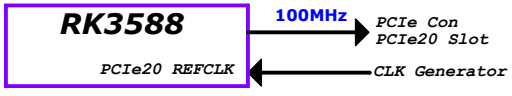

PCIe/SATA Connecter Diagram

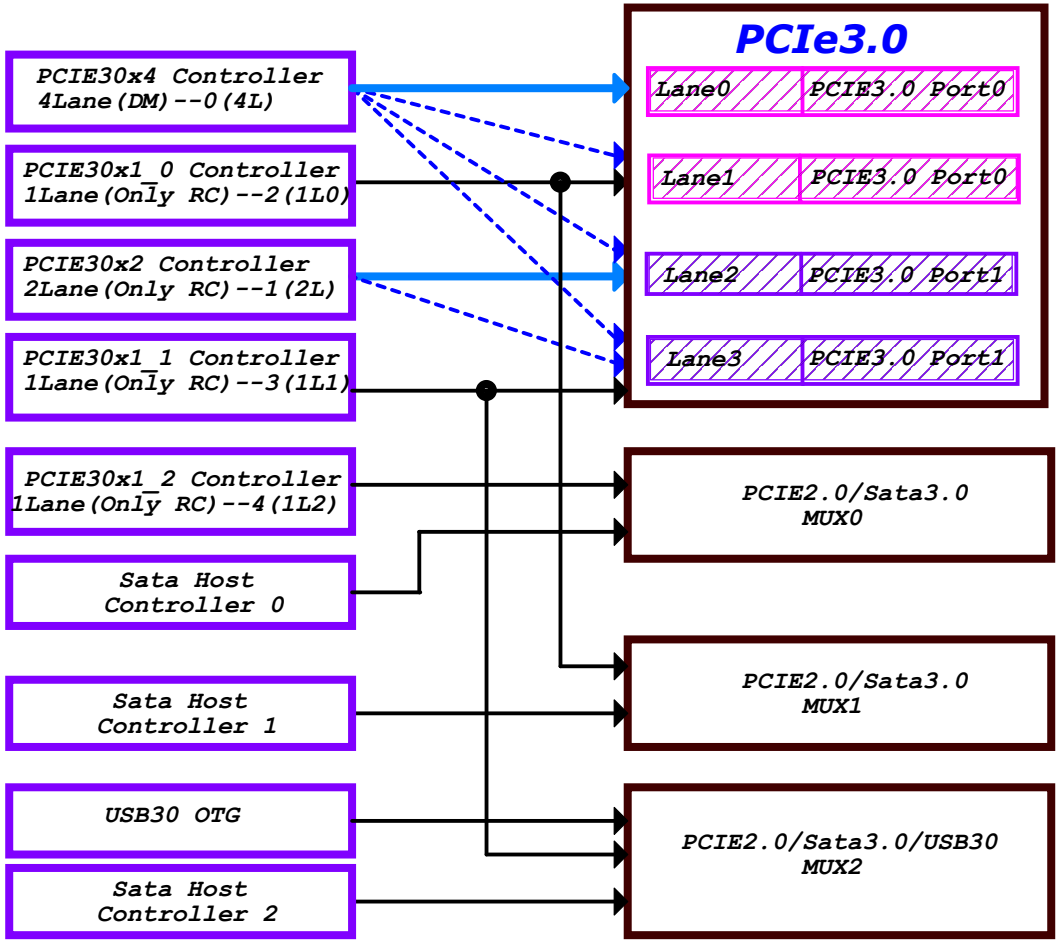

PCIe Controller Configure Table

Controller Name	Data & Clk Lane Configure			Control GPIO
	OPTION	CLK LANE	DATA LANE	
PCIE30X4 RC & EP	OPTION1	PCIE30_PORT0_REF_CLKP PCIE30_PORT0_REF_CLKN	PCIE30_PORT0_TX0 PCIE30_PORT0_RX0	PCIE30X4_CLKREQ_M* PCIE30X4_WAKEN_M* PCIE30X4_PERSTN_M* PCIE30X4_BUTTON_RSTN
	OPTION2	PCIE30_PORT0_REF_CLKP PCIE30_PORT0_REF_CLKN	PCIE30_PORT0_TX0 PCIE30_PORT0_RX0 PCIE30_PORT0_TX1 PCIE30_PORT0_RX1	
	OPTION3	PCIE30_PORT0_REF_CLKP PCIE30_PORT0_REF_CLKN PCIE30_PORT1_REF_CLKP PCIE30_PORT1_REF_CLKN	PCIE30_PORT0_TX0 PCIE30_PORT1_TX0 PCIE30_PORT0_RX0 PCIE30_PORT1_RX0 PCIE30_PORT0_TX1 PCIE30_PORT1_TX1 PCIE30_PORT0_RX1 PCIE30_PORT1_RX1	
PCIE30X2 RC	OPTION1	PCIE30_PORT1_REF_CLKP PCIE30_PORT1_REF_CLKN	PCIE30_PORT1_TX0 PCIE30_PORT1_RX0	PCIE30X2_CLKREQ_M* PCIE30X2_WAKEN_M* PCIE30X2_PERSTN_M* PCIE30X2_BUTTON_RSTN
	OPTION2	PCIE30_PORT1_REF_CLKP PCIE30_PORT1_REF_CLKN	PCIE30_PORT1_TX0 PCIE30_PORT1_RX0 PCIE30_PORT1_TX1 PCIE30_PORT1_RX1	
PCIE30X1_0 RC	OPTION1	PCIE30_PORT0_REF_CLKP PCIE30_PORT0_REF_CLKN	PCIE30_PORT0_TX1 PCIE30_PORT0_RX1	PCIE30X1_0_CLKREQ_M* PCIE30X1_0_WAKEN_M* PCIE30X1_0_PERSTN_M* PCIE30X1_0_BUTTON_RSTN
	OPTION2	PCIE20_1_REFCLKP PCIE20_1_REFCLKN	PCIE20_1_TXP PCIE20_1_RXP PCIE20_1_TXN PCIE20_1_RXN	
PCIE30X1_1 RC	OPTION1	PCIE30_PORT1_REF_CLKP PCIE30_PORT1_REF_CLKN	PCIE30_PORT1_TX1 PCIE30_PORT1_RX1	PCIE30X1_1_CLKREQ_M* PCIE30X1_1_WAKEN_M* PCIE30X1_1_PERSTN_M* PCIE30X1_1_BUTTON_RSTN
	OPTION2	PCIE20_2_REFCLKP PCIE20_2_REFCLKN	PCIE20_2_TXP PCIE20_2_RXP PCIE20_2_TXN PCIE20_2_RXN	
PCIE30X1_2 RC	OPTION1	PCIE20_0_REFCLKP PCIE20_0_REFCLKN	PCIE20_0_TXP PCIE20_0_RXP PCIE20_0_TXN PCIE20_0_RXN	PCIE20X1_2_CLKREQ_M* PCIE20X1_2_WAKEN_M* PCIE20X1_2_PERSTN_M* PCIE20X1_2_BUTTON_RSTN

Note:
PCIE30_PORT*_REF_CLKP/N is input gpio

PCIE20_*_REFCLKP/N is output or input gpio

Note:
M*=Mean to M0 or M1,It's the same source,Just multiplex to M0 or M1, So,Only use one at the same time.

PCIe/SATA Function Combination

Function Combination

Function Item	PCIEX4	PCIEX2	PCIEX1	SATA
Option1	1(DM)	0	3(RC)	0
Option2	1(DM)	0	2(RC)	1
Option3	1(DM)	0	1(RC)	2
Option4	1(DM)	0	0	3
Option5	0	1(DM)+1(RC)	3(RC)	0
Option6	0	1(DM)+1(RC)	2(RC)	1
Option7	0	1(DM)+1(RC)	1(RC)	2
Option8	0	1(DM)+1(RC)	0	3
Option9	0	1(DM)	4(RC)	1
Option10	0	1(DM)	3(RC)	2
Option11	0	1(DM)	2(RC)	3
Option12	0	0	5(RC)	2
Option13	0	0	4(RC)	3

Rockchip Confidential

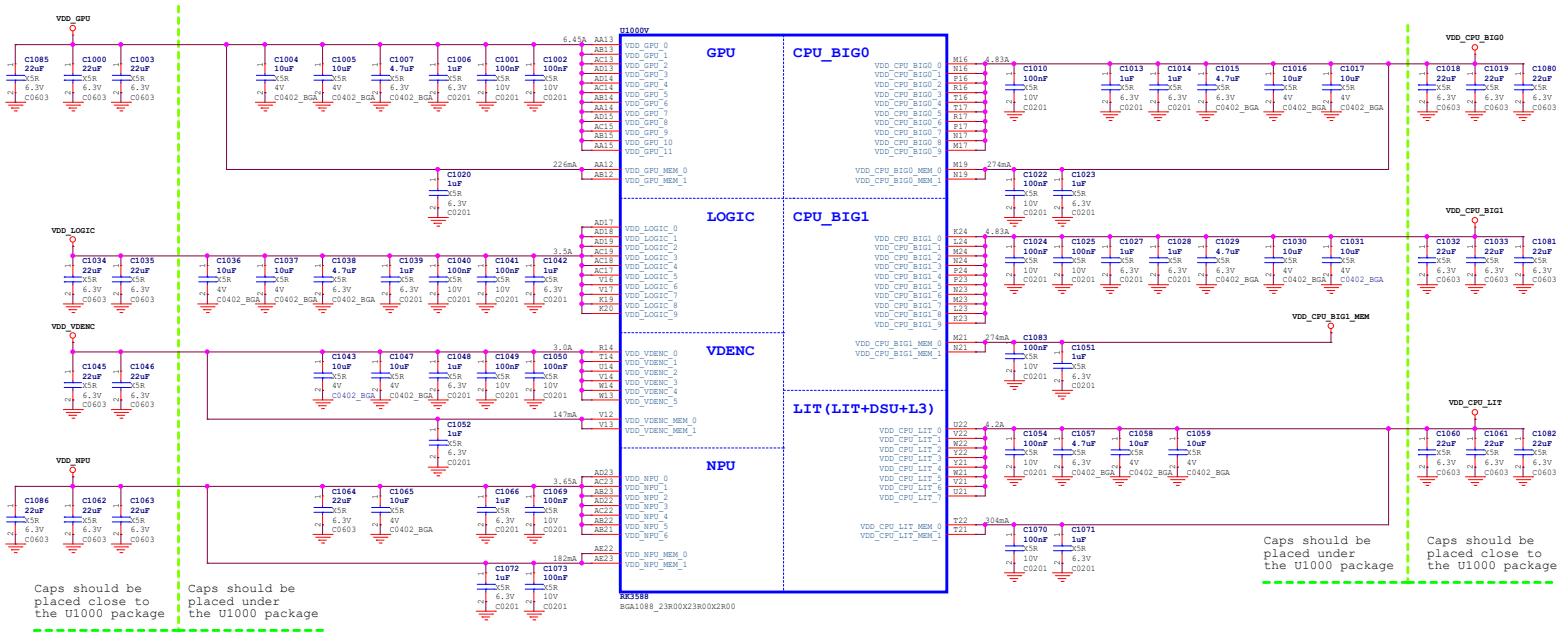

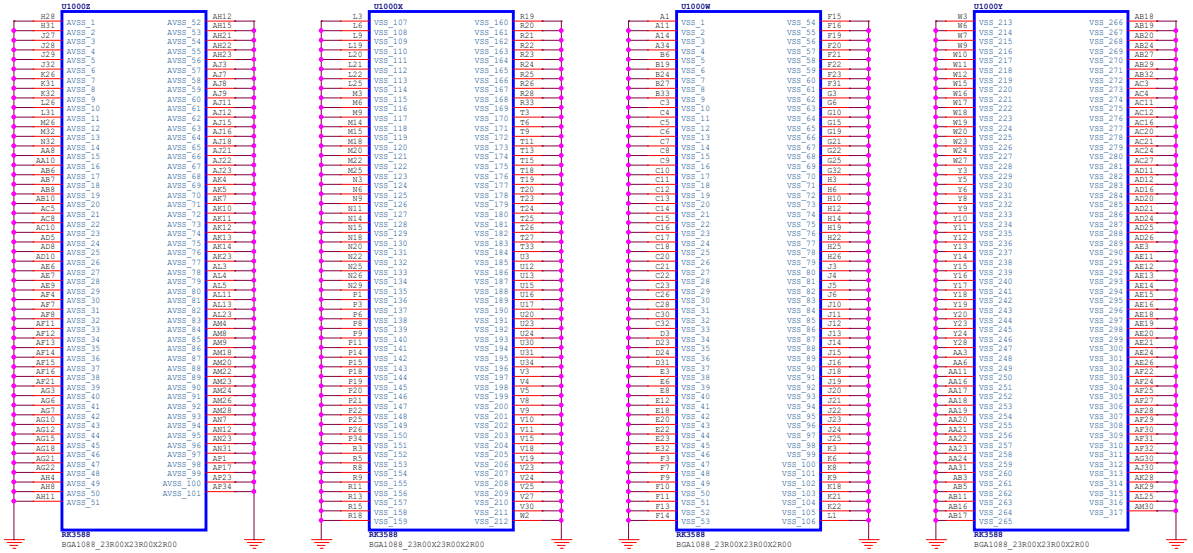

Rockchip Confidential

Rockchip Electronics Co., Ltd			
Project:	TB_RK3588_CoreBoard		
File:	10.RK3588_Power/GND		
Date:	Wednesday, March 30, 2022	Rev:	V1.0
Designed by: Zhangdz	Reviewed by:	Sheet:	10 of 43

RK3588_E(OSC/PLL/PMUIO1)

Note:
Adjusted the load capacitance according to the crystal specification

The CL is the load capacitance of the crystal that is recommended by the crystal vendors to obtain target clock frequency.

CL={CL1*CL2/(CL1+CL2))}+PCB strays
Total CL<12pF

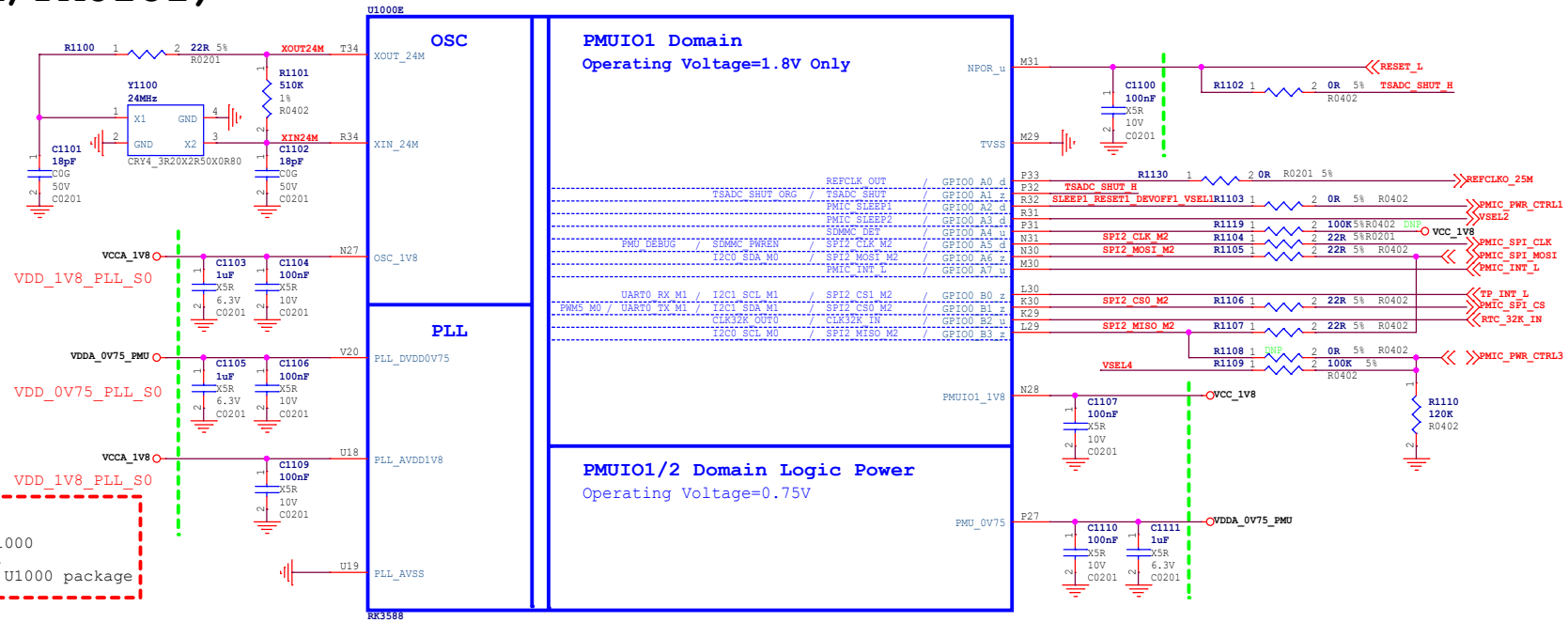

Note:
Caps of between dashed green lines and U1000 should be placed under the U1000 package.
Other caps should be placed close to the U1000 package

RK3588_F(PMUIO2)

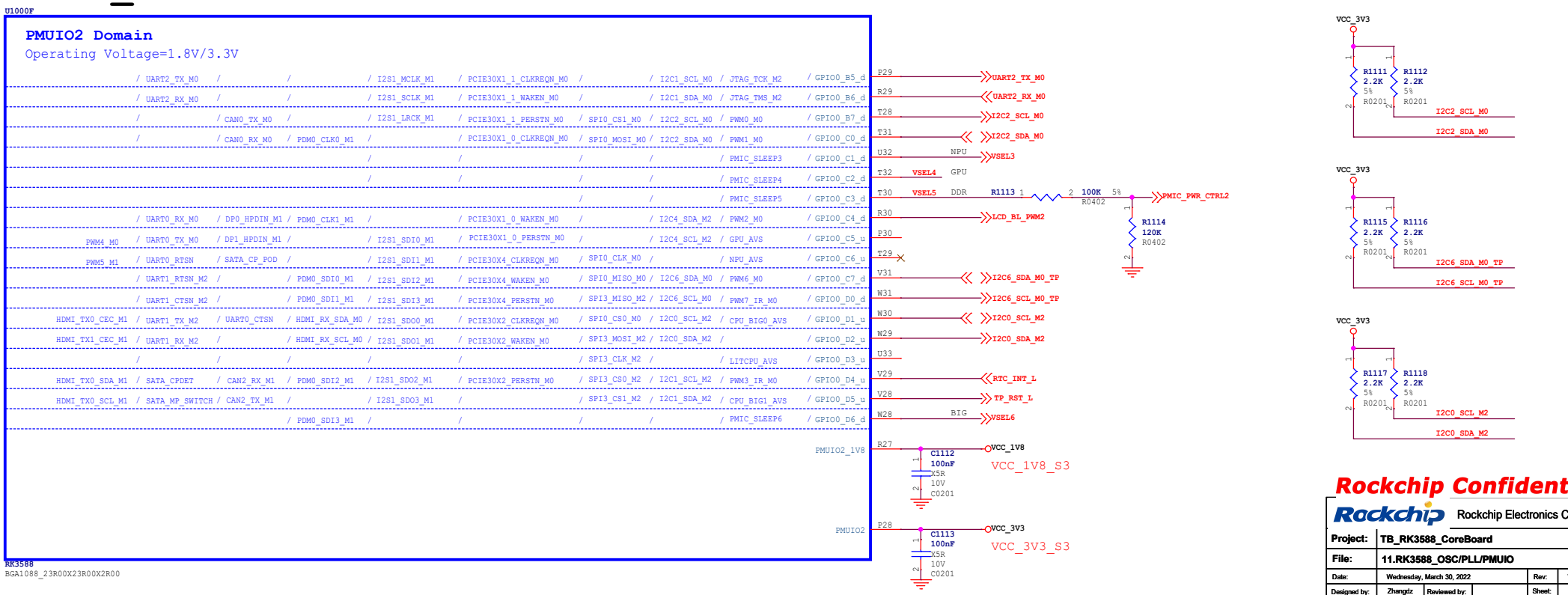

Rockchip Confidential

Rockchip Electronics Co., Ltd			
Project:	TB_RK3588_CoreBoard		
File:	11.RK3588_OSC/PLL/PMUIO		
Date:	Wednesday, March 30, 2022	Rev:	V1.0
Designed by: Zhangdz	Reviewed by:	Sheet:	11 of 43

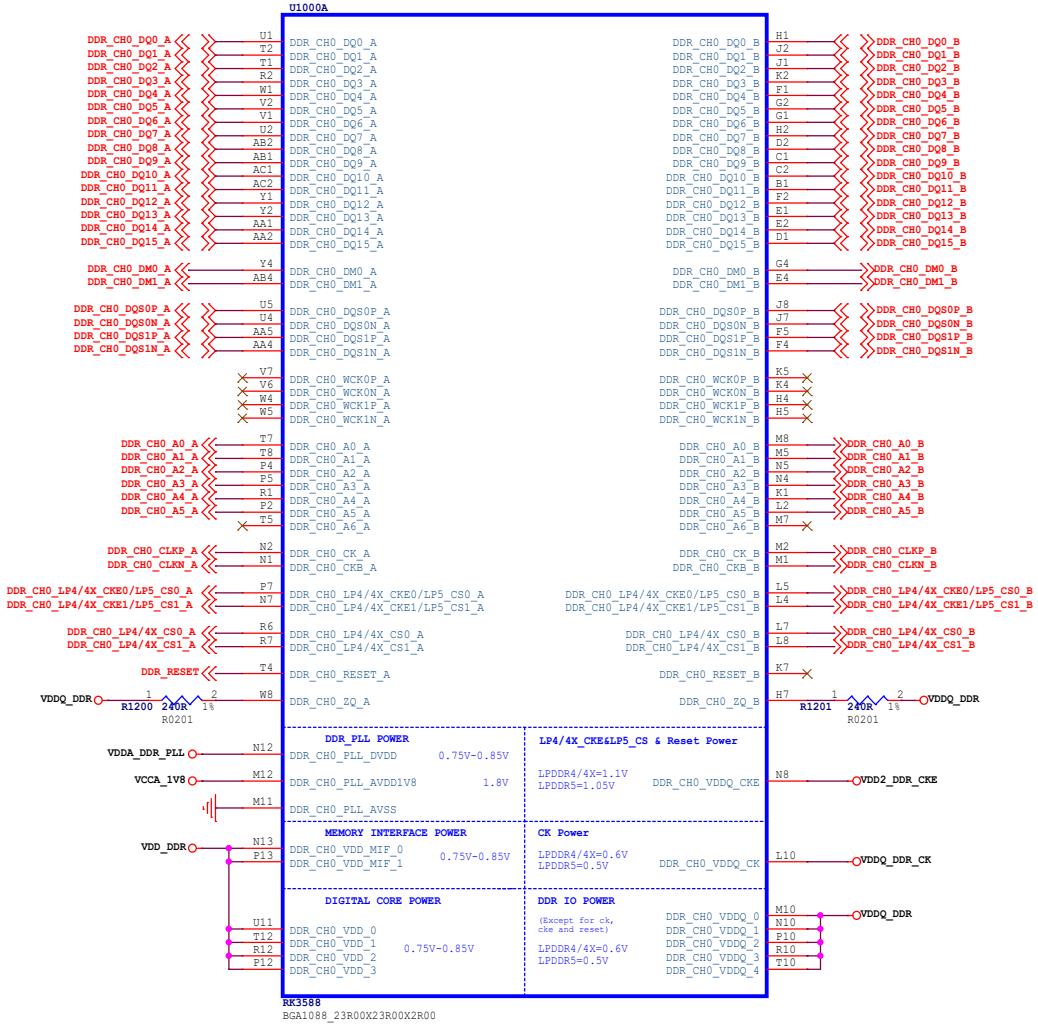

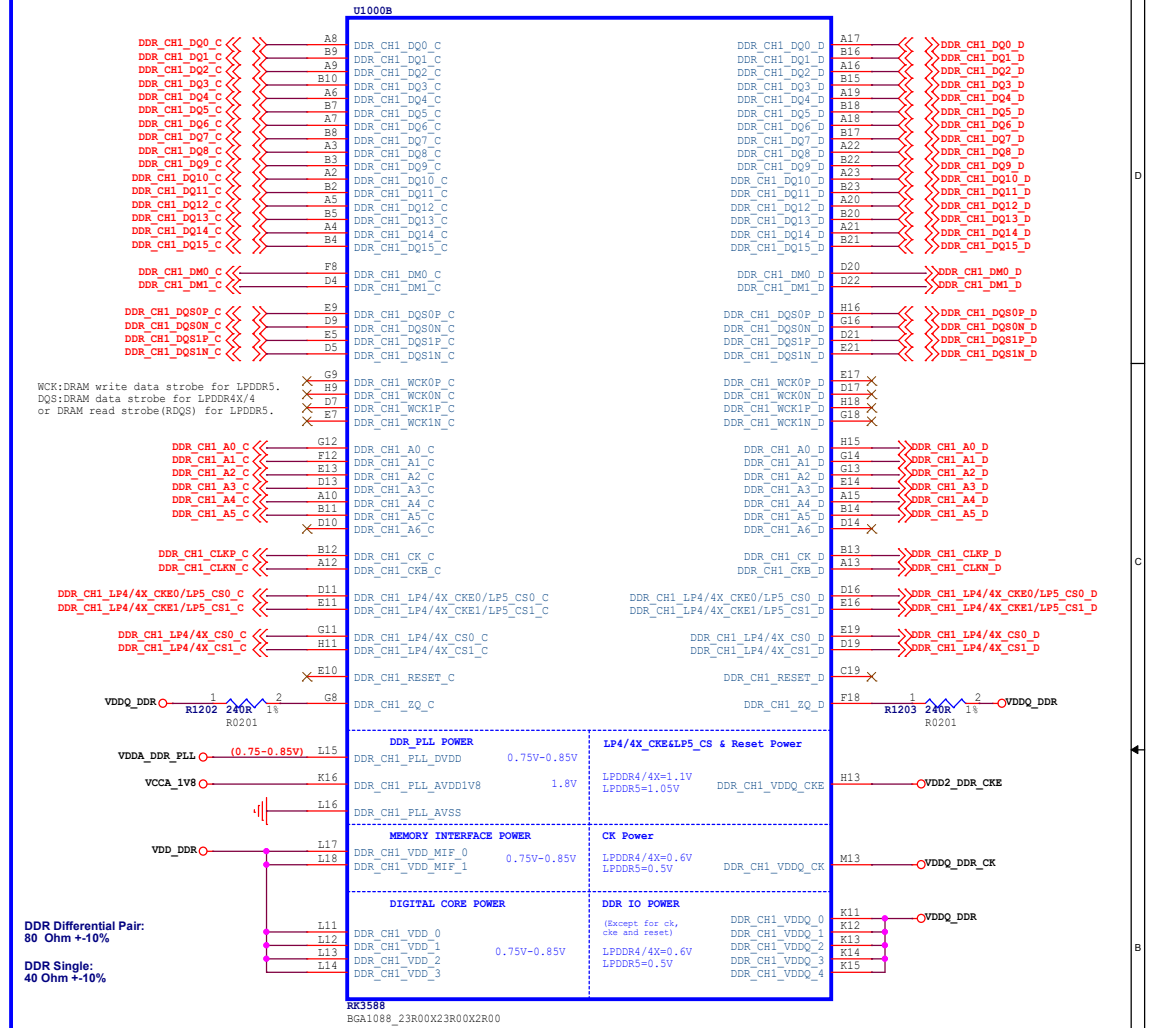

DDR FILTER

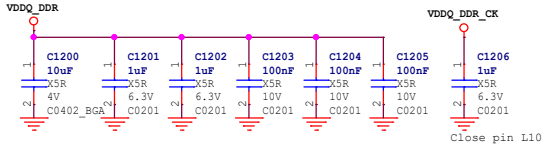

Hold power of CLK during retention times.

Sequence:
VDD-VDDQ_CKE-VDDQ

VDDQ_LP4/4X_CKE/LP5_CS:
power for LP4_CKE/LP5_CS and RESET,
lpddr4X=1.1V/lpddr5=1.05V

VDDQ_CK:power for CK,
LPDDR4/4X=0.6V/LPDDR5=0.5V

VDDQ:Power for DDR IO(except for ck, cke and reset);
LPDDR4/4X=0.6V/LPDDR5=0.5V

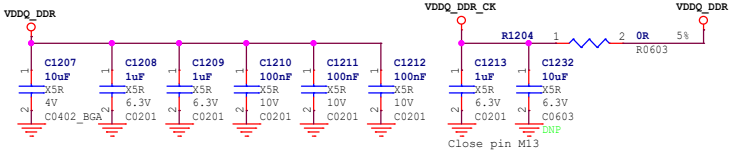

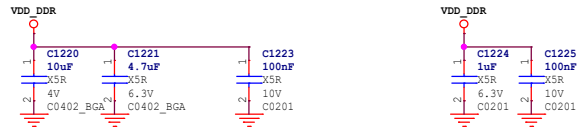

Rockchip Confidential

Rockchip	Rockchip Electronics Co., Ltd		
Project:	TB_RK3588_CoreBoard		
File:	12.RK3588 DDR Controler		
Date:	Wednesday, March 30, 2022	Rev:	V1.0
Designed by: Zhangdz	Reviewed by:	Sheet:	12 of 43

RK3588_C(EMMCIO Domain)

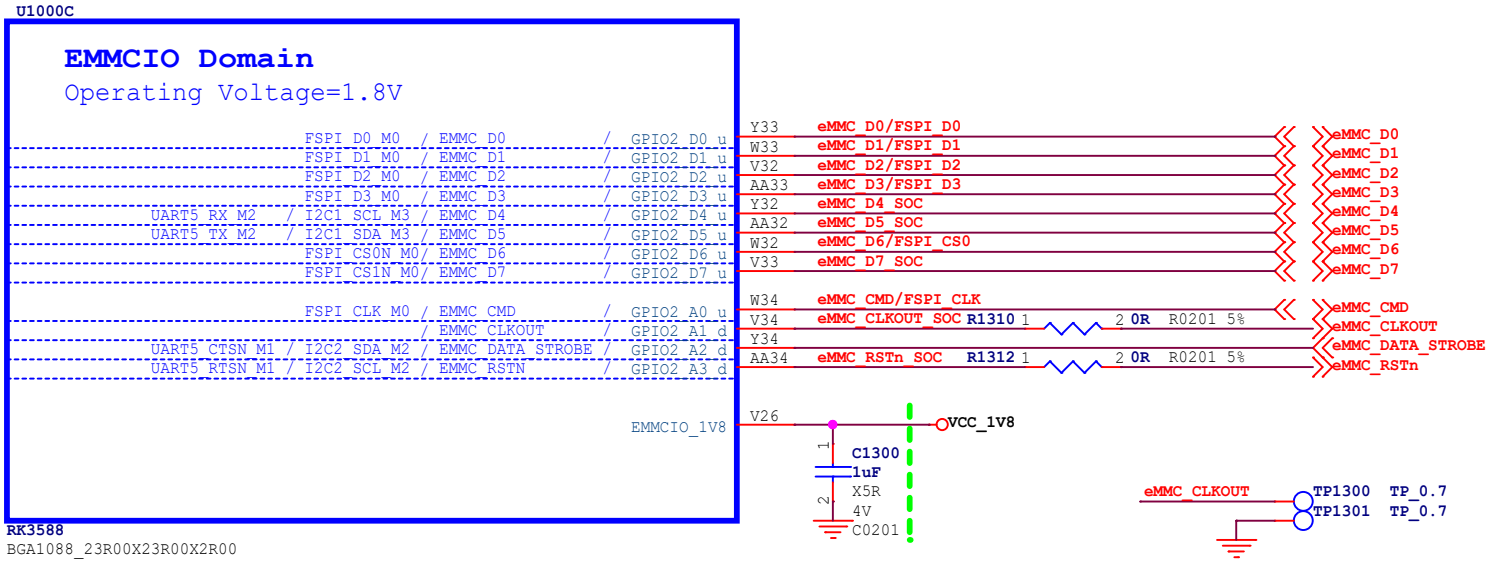

RK3588_D(VCCIO2 Domain)

Note:
Caps of between dashed green lines and U1000 should be placed under the U1000 package.
Other caps should be placed close to the U1000 package

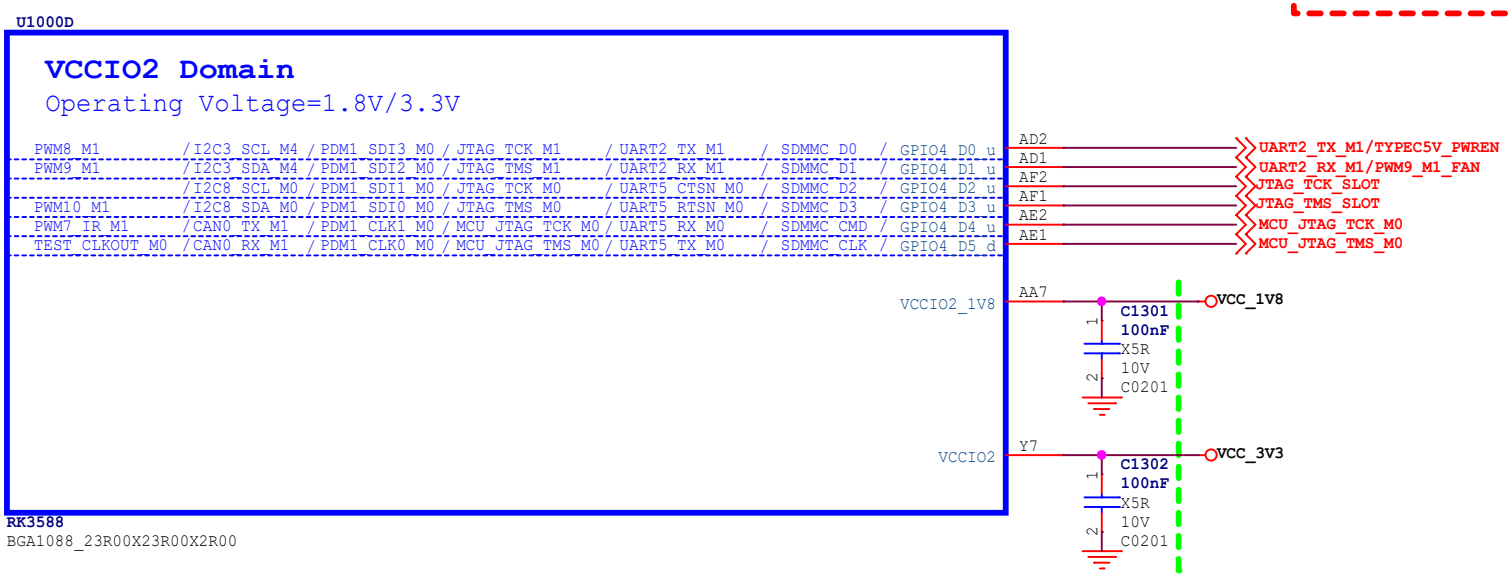

Rockchip Confidential

Rockchip Electronics Co., Ltd			
Project:	TB_RK3588_CoreBoard		
File:	13.RK3588_Flash/SD Controller		
Date:	Wednesday, March 30, 2022	Rev:	V1.0
Designed by: Zhangdz	Reviewed by:	Sheet:	13 of 43

RK3588_M(TYPEC/DP)

If not used,
Signal:leave floating
Power: leave floating

DP Lane
Swap Off:
Lane0/1/2/3_TXdata mapping to Lane0/1/2/3_TXDP/N
Swap On:
Lane0/1/2/3_TXdata mapping to Lane2/3/0/1_TXDP/N

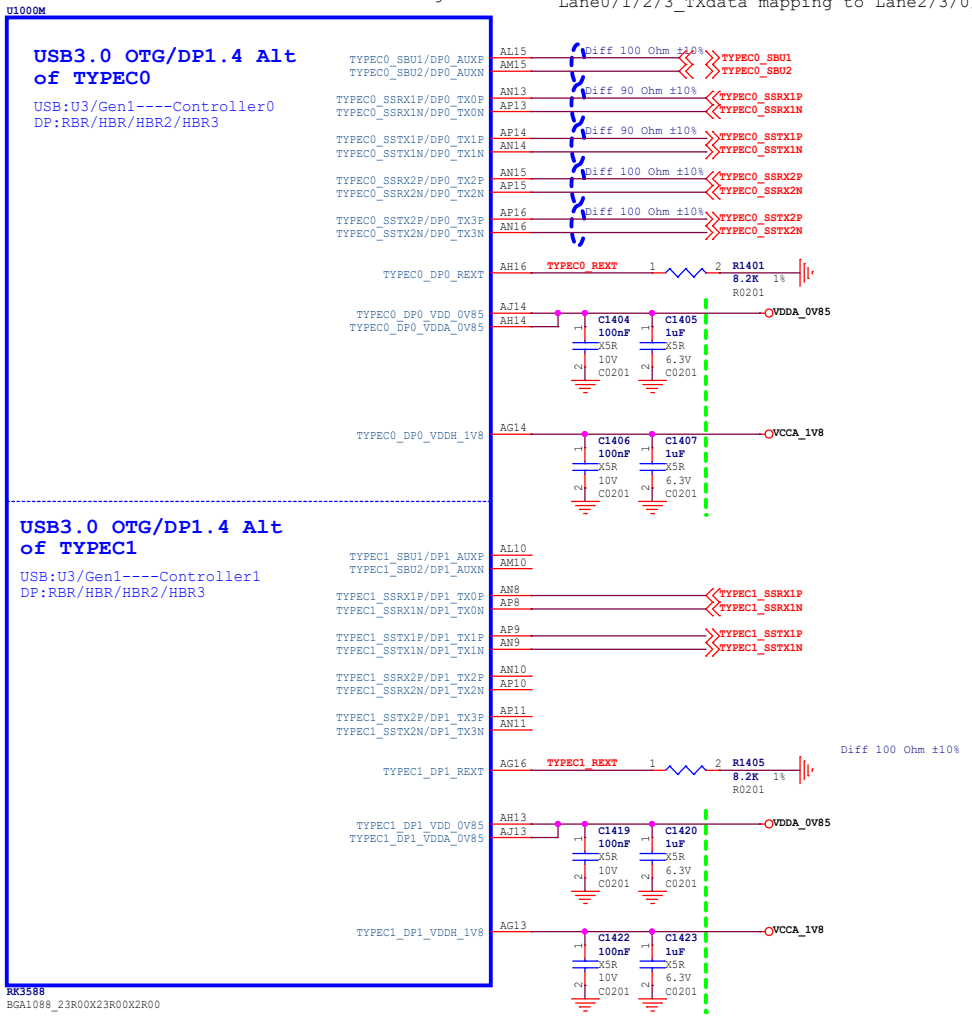

USB30/DP1.4 Alt Mode Configuration

Option1	*DP x4Lane*	*DP_TX_Lane0-3*
Option2	*USB30 x4Lane*	*DP_TX_Lane0-3*
Option3	*USB30X2Lane+DPX2Lane*	*USB30:Lane0 Lane1* *DP:Lane2 Lane3*
Option4	*USB30X2Lane+DPX2Lane*	*USB30:Lane2 Lane3* *DP:Lane0 Lane1*

RK3588_L(USB2.0 HOST/OTG)

If not used(TYPEC0_USB20_OTG Must used for download)
Signal:leave floating
Power: Must supply power

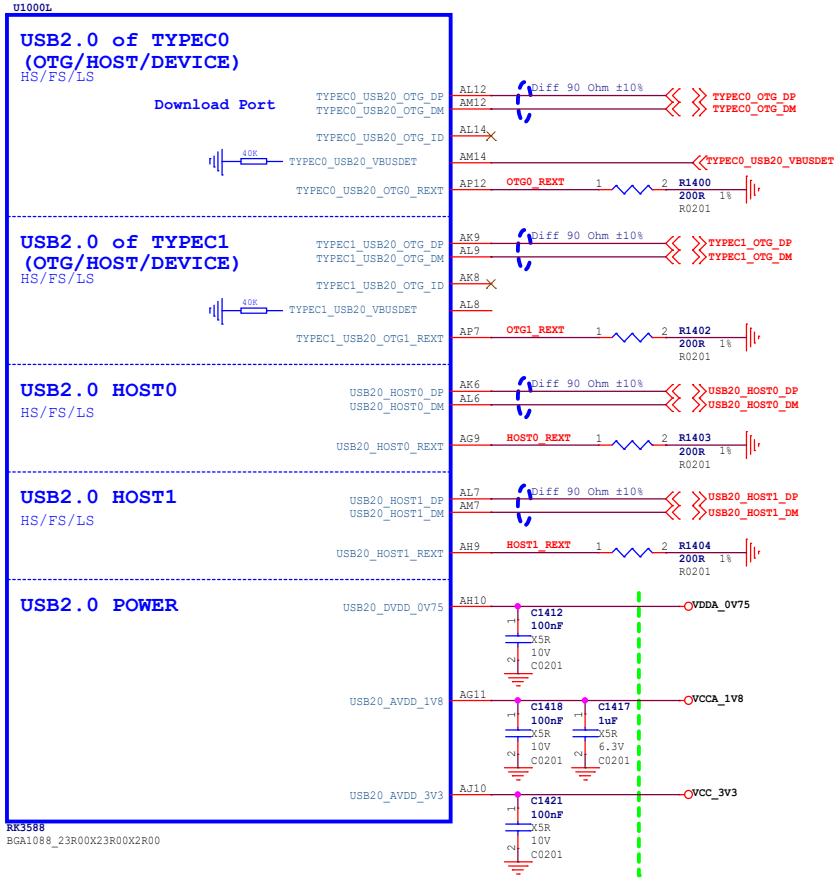

Note:
The USB20_VBUSDET pin internal has a pull-down resistance(40K ohm) to ground,The resistance creates a voltage with the external series 30K ohm resistor.The VBUSDETpin voltage range <=3.3V.

Note:
Caps of between dashed green lines and U1000 should be placed under the U1000 package.
Other caps should be placed close to the U1000 package

Rockchip Confidential

Rockchip	Rockchip Electronics Co., Ltd		
Project:	TB_RK3588_CoreBoard		
File:	14.RK3588_USB30/USB20_Ctrl		
Date:	Wednesday, March 30, 2022	Rev:	V1.0
Designed by: Zhangdz	Reviewed by:	Sheet:	14 of 43

RK3588_G(VCCIO1 Domain)

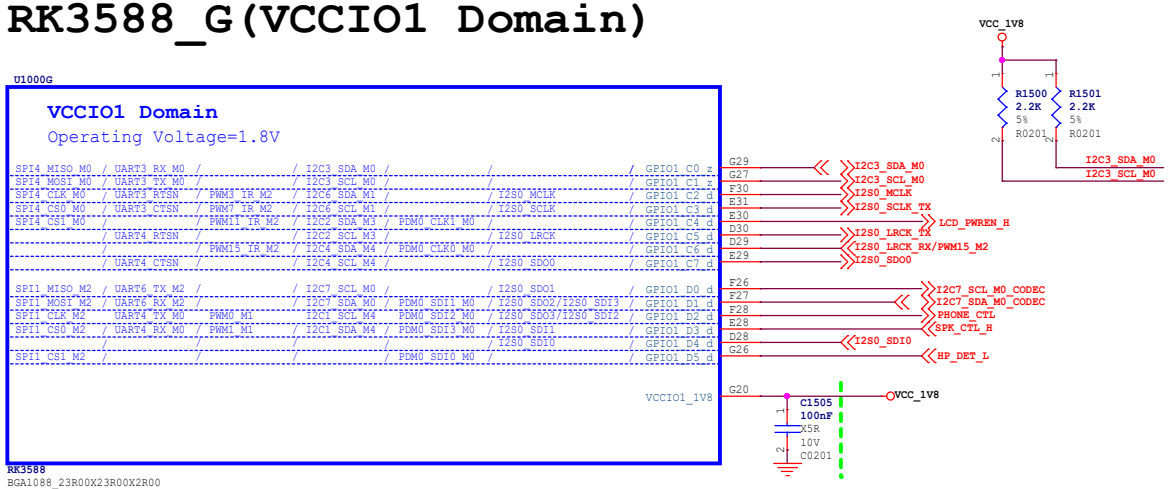

RK3588_U(SARADC/OTP)

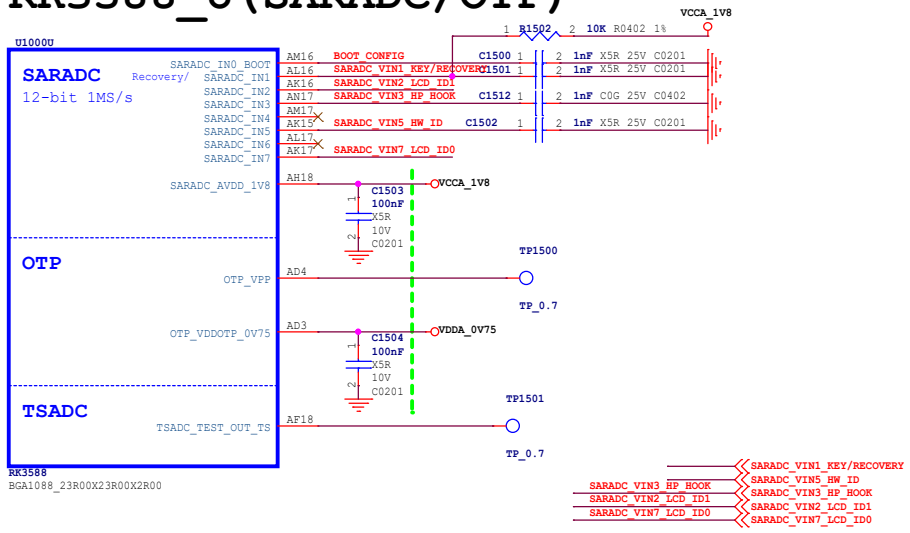

RK3588_H(VCCIO3 Domain)

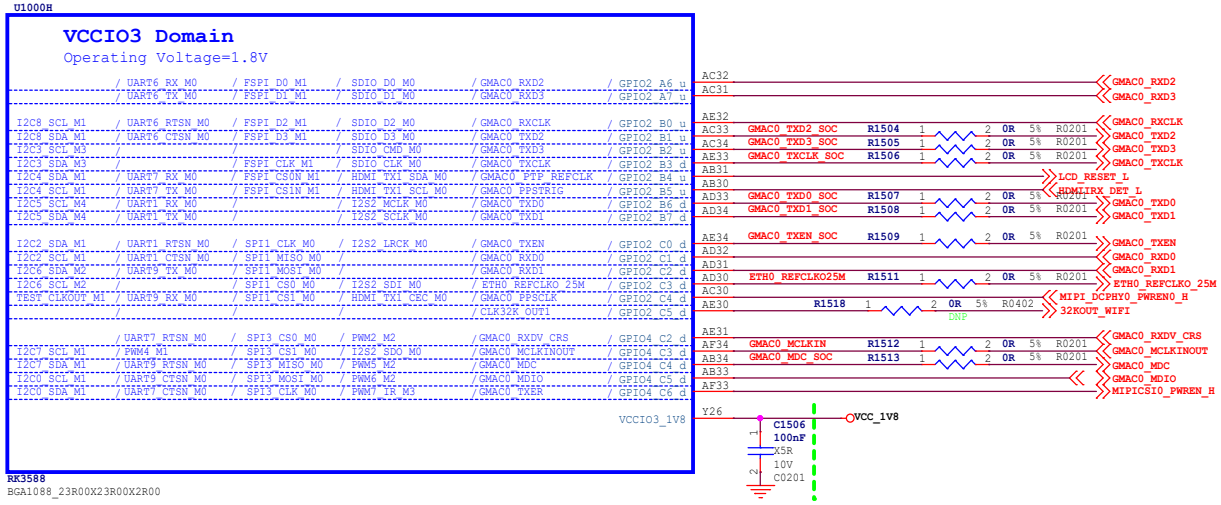

Note:

Caps of between dashed green lines and U1000 should be placed under the U1000 package.
Other caps should be placed close to the U1000 package

BOOT MODE CONFIG

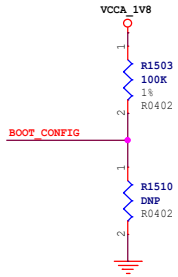

Item	Rup	Rdown	ADC	VOL	Boot sequence
LEVEL1	DNP	100K	0	0V	USB
LEVEL2	100K	20K	682	0.3V	SD Card-USB
LEVEL3	360K	180K	1365	0.6V	EMMC-USB
LEVEL4	100K	100K	2047	0.9V	FSPI M0-USB
LEVEL5	180K	360K	2730	1.2V	FSPI M1-USB
LEVEL6	20K	100K	3412	1.5V	FSPI M2-USB
LEVEL7	100K	DNP	4095	1.8V	FSPI_M2-FSPI_M1-FSPI_M0 -EMMC-SD Card-USB

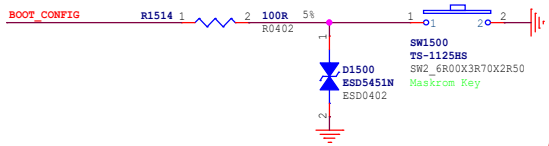

Note:
If BOOT_SARADC_IN0=0V after power-on reset, then system will enter into Maskrom mode.

Rockchip Confidential

Rockchip	Rockchip Electronics Co., Ltd		
Project:	TB_RK3588_CoreBoard		
File:	15.RK3588_SARADC/1.8V Only GPIO		
Date:	Wednesday, March 30, 2022	Rev:	V1.0
Designed by: Zhangdz	Reviewed by:	Sheet:	15 of 43

RK3588_Q/R(MIPI_D/C_PHY0/1)

If not used,
Signal:leave floating
Power: leave floating

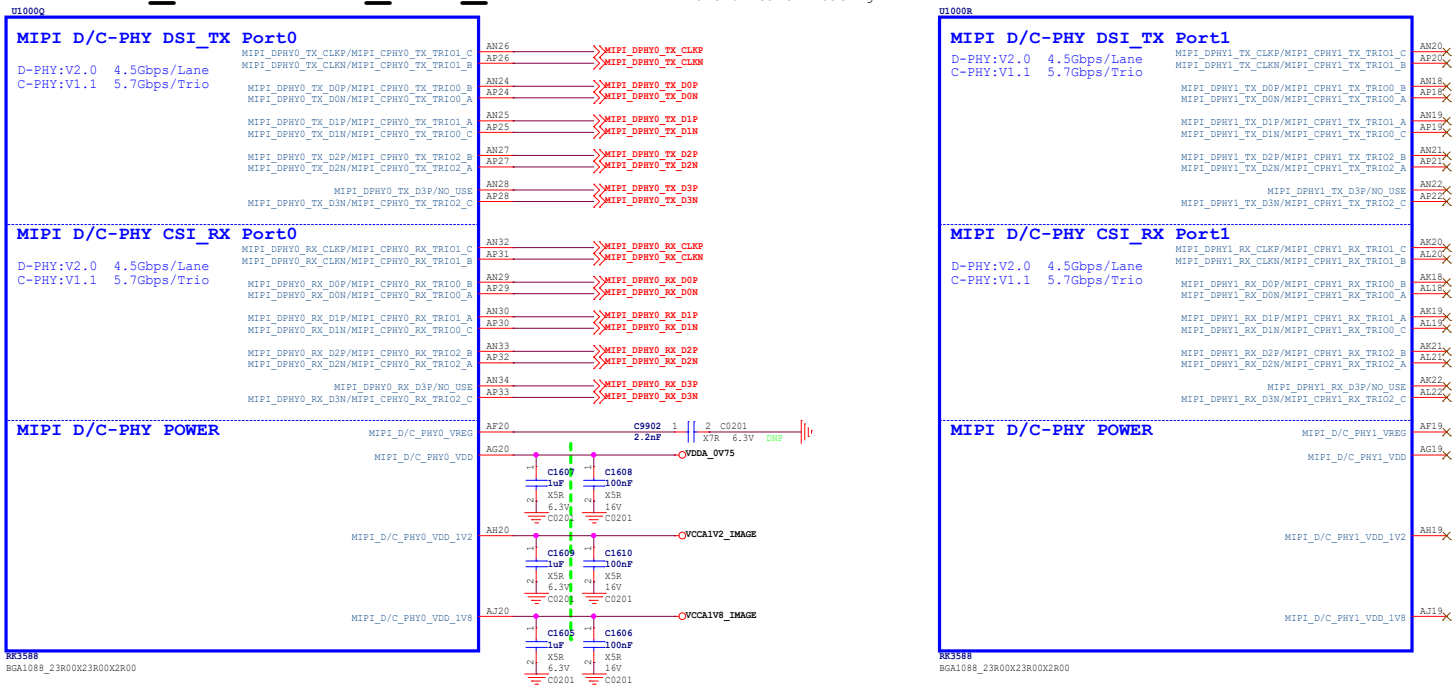

RK3588_P(MIPI_CSI_RX_PHY)

If not used,
Signal:leave floating
Power: leave floating or tie to VSS

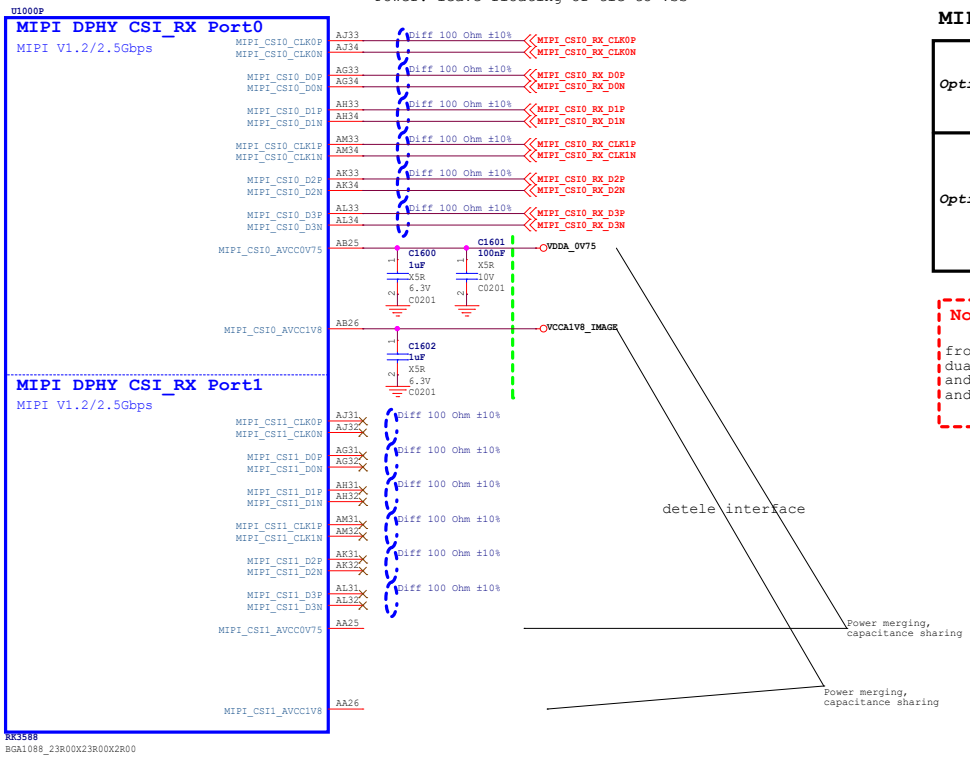

MIPI_CSI_RX Configuration

Option1	*Sensor1 x4Lane*	*MIPI_CSI_RX_D0-3* *MIPI_CSI_RX_CLK0*
Option2	*Sensor1 x2Lane* + *Sensor2 x2Lane*	*MIPI_CSI_RX_D0-1* *MIPI_CSI_RX_CLK0*
		MIPI_CSI_RX_D2-3 *MIPI_CSI_RX_CLK1*

Note:

When in single clock lane mode, CLK0P/0N is the clock lane from Data lane0 to Data lane3,but clock lane1 is invalid; In dual clock lanes mode,CLK0P/0N is the clock lane of Data lane0 and Data lane1,while CLK1P/1N is the clock lane of Data lane2 and Data lane3.

Note:

Caps of between dashed green lines and U1000 should be placed under the U1000 package.
Other caps should be placed close to the U1000 package

Rockchip Confidential

RK3588_S(HDMI2.1 TX)

If not used,
Signal:leave floating
Power: Tie to VSS

U1000S

HDMI TX/eDP MUX Port0

HDMI:V2.1 12Gbps
eDP: V1.3 5.4Gbps

HDMI TX/eDP MUX Port1

HDMI:V2.1 12Gbps
eDP: V1.3 5.4Gbps

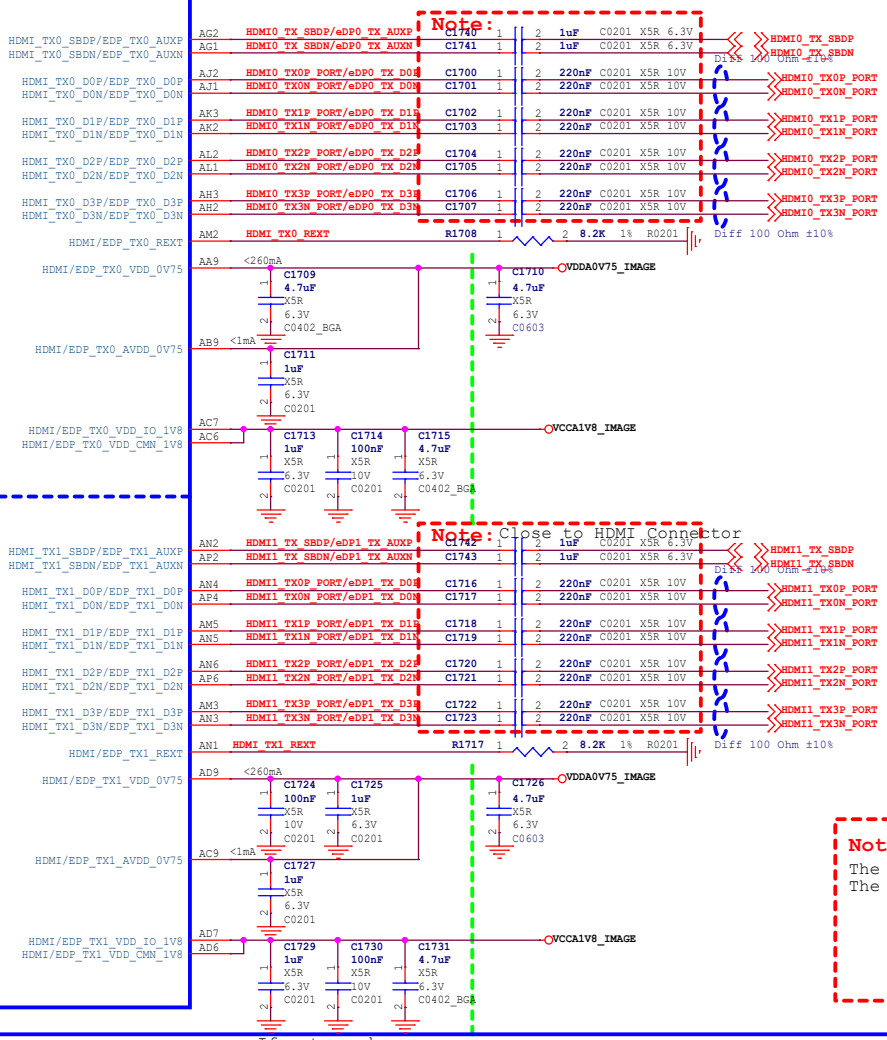

RK3588
BGA1088_23R00X23R00X2R00

Note:
The HDMI2.1 trace length is less than 100mm.
The HDMI2.1 differential trace impedance is 100 OHM.

RK3588_T(HDMI20 RX)

If not used,
Signal:leave floating
Power: leave floating or tie to VSS

U1000T

HDMI RX

HDMI:V2.0

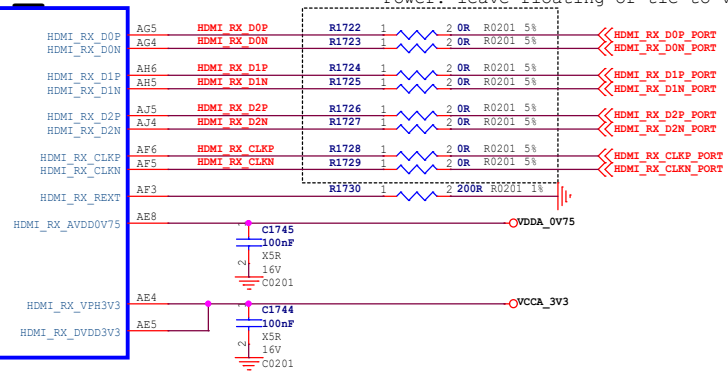

RK3588
BGA1088_23R00X23R00X2R00

Note:
Caps of between dashed green lines and U1000 should be placed under the U1000 package.
Other caps should be placed close to the U1000 package

Rockchip Confidential

Rockchip Electronics Co., Ltd

Project:	TB_RK3588_CoreBoard		
File:	17.RK3588_HDMI/eDP Interface		
Date:	Wednesday, March 30, 2022	Rev:	V1.0
Designed by: Zhangdz	Reviewed by:	Sheet:	17 of 43

RK3588_N(PCIE20)

If not used,
Signal:leave floating
Power: Tie to VSS

CLK Differential Pair:
100 Ohm±10%
DATA Differential Pair:
PCIE20: 85 Ohm ±10%
SATA30: 100 Ohm ±10%

U1000N

PCIE20/SATA30 Mux0

PCIe20x1_2
1Lane(RC)--4(1L2)

SATA30 HOST
Controller0

MUX

input or output

PCIE20_0_REFCLKP / PCIE20_0_REFCLKN — L32, L33 — PCIE20_0_REFCLKP / PCIE20_0_REFCLKN

Diff 100 Ohm ±10%

PCIE20_0_TXP/SATA30_0_TXP / PCIE20_0_TXN/SATA30_0_TXN — M34, M33 — SATA30_0_TXP / SATA30_0_TXN

PCIE20_0_RXP/SATA30_0_RXP / PCIE20_0_RXN/SATA30_0_RXN — N33, N34 — SATA30_0_RXP / SATA30_0_RXN

PCIE20_SATA30_0_AVDD_0V85 — M28 — VDDA_0V85
C1801 10uF X5R 4V C0402_BGA

PCIE20_SATA30_0_AVDD_1V8 — M27 — VCCA_1V8
C1803 4.7uF X5R 6.3V C0402_BGA

PCIE20:Gen1/Gen2
SATA30:Gen1/Gen2/Gen3

Power merging, capacitance sharing

PCIE20/SATA30 Mux1

PCIe30x1_0
1Lane(RC)--2(1L0)

SATA30 HOST
Controller1

MUX

input or output

PCIE20_1_REFCLKP / PCIE20_1_REFCLKN — H32, H33 — PCIE20_1_REFCLKP / PCIE20_1_REFCLKN

To AP6275PR3, PCIE---->wifi module

PCIE20_1_TXP/SATA30_1_TXP / PCIE20_1_TXN/SATA30_1_TXN — K33, K34 — PCIE20_1_TXP/SATA30_1_TXP / PCIE20_1_TXN/SATA30_1_TXN
PCIE20_1_TXP C1824 100nF X5R 16V C0201
PCIE20_1_TXN C1825 100nF X5R 16V C0201

PCIE20_1_RXP/SATA30_1_RXP / PCIE20_1_RXN/SATA30_1_RXN — J33, J34 — PCIE20_1_RXP/SATA30_1_RXP / PCIE20_1_RXN/SATA30_1_RXN

PCIE20_SATA30_1_AVDD_0V85 — L28 — VDDA_0V85
C1808 100nF X5R 10V C0201

PCIE20_SATA30_1_AVDD_1V8 — L27 — VCCA_1V8
C1810 100nF X5R 10V C0201

PCIE20:Gen1/Gen2
SATA30:Gen1/Gen2/Gen3

Power merging, capacitance sharing

PCIE20/SATA30/USB30 HOST Mux2

PCIe30x1_1
1Lane(RC)--3(1L1)

SATA30 HOST
Controller2

USB30 HOST
Controller2

MUX

input or output

PCIE20_2_REFCLKP / PCIE20_2_REFCLKN — G31, G30 — PCIE20_2_REFCLKP / PCIE20_2_REFCLKN

To RTL8111, PCIE---->ETHERNET

PCIE20_2_TXP/SATA30_2_TXP/USB30_2_SSTXP / PCIE20_2_TXN/SATA30_2_TXN/USB30_2_SSTXN — H30, H29 — PCIE20_2_TXP / PCIE20_2_TXN
PCIE20_TX0P C1820 100nF C0201 X5R 16V
PCIE20_TX0N C1821 100nF C0201 X5R 16V

PCIE20_2_RXP/SATA30_2_RXP/USB30_2_SSRXP / PCIE20_2_RXN/SATA30_2_RXN/USB30_2_SSRXN — J31, J30 — PCIE20_2_RXP / PCIE20_2_RXN

PCIE20_SATA30_USB30_2_AVDD_0V85 — K28 — VDDA_0V85
C1816 1uF X5R 6.3V C0201

PCIE20_SATA30_USB30_2_AVDD_1V8 — K27 — VCCA_1V8
C1819 4.7uF X5R 6.3V C0402_BGA

PCIE20:Gen1/Gen2
USB 30:Gen1
SATA30:Gen1/Gen2/Gen3

RK3588
BGA1088_23R00X23R00X2R00

RK3588_O(PCIE30)

If not used,
REF_CLKP/N: Tie to VSS
Other Signal:leave floating
Power: leave floating or tie to VSS

U1000O

Note:
Only PCIE30 Controller 0 support RC and EP,Other controller only support RC Mode.

PCIE30X4

PCIe30X4
4Lane(DM)--0(4L)

PCIe30x1_0
1Lane(RC)--2(1L0)

PCIE20/SATA30 MUX1

PCIe30x2
2Lane(RC)--1(2L)

PCIe30x1_1
1Lane(RC)--3(1L1)

PCIE20/SATA30/USB30 MUX2

PCIE30:
PCIe1.1(2.5Gbps)
PCIe2.1(5Gbps)
PCIe3.0(8Gbps)

PCIE30 PORT0

input

PCIE30_PORT0_REF_CLKP / PCIE30_PORT0_REF_CLKN — E33, E34 — PCIE30_PORT0_REFCLKP_IN / PCIE30_PORT0_REFCLKN_IN

Lane0

PCIE30_PORT0_TX0P / PCIE30_PORT0_TX0N — D32, D33 — PCIE30_PORT0_TX0P / PCIE30_PORT0_TX0N
PCIE30_PORT0_RX0P / PCIE30_PORT0_RX0N — G33, G34 — PCIE30_PORT0_RX0P / PCIE30_PORT0_RX0N

Lane1

PCIE30_PORT0_TX1P / PCIE30_PORT0_TX1N — C33, C34 — PCIE30_PORT0_TX1P / PCIE30_PORT0_TX1N
PCIE30_PORT0_RX1P / PCIE30_PORT0_RX1N — F32, F33 — PCIE30_PORT0_RX1P / PCIE30_PORT0_RX1N

Diff 100 Ohm ±10%
Diff 85 Ohm ±10%

PCIE30_PORT0_RESREF — B34 — PCIE30_0_REF — R1800 200R 1% R0201

PCIE30_PORT0_AVDD0V75 — G24 — VDDA_0V75
C1804 1uF X5R 6.3V C0201
C1805 4.7uF X5R 6.3V C0402_BGA

PCIE30_PORT0_AVDD1V8 — G23 — VCCA_1V8
C1806 1uF X5R 6.3V C0201
C1807 4.7uF X5R 6.3V C0402_BGA

PCIE30 PORT1

input

PCIE30_PORT1_REF_CLKP / PCIE30_PORT1_REF_CLKN — A28, B28 — R1808 0R 5% R0402, R1809 0R 5% R0402

Lane0

PCIE30_PORT1_TX0P / PCIE30_PORT1_TX0N — B30, A30
PCIE30_PORT1_RX0P / PCIE30_PORT1_RX0N — B32, A32

Lane1

PCIE30_PORT1_TX1P / PCIE30_PORT1_TX1N — C29, B29
PCIE30_PORT1_RX1P / PCIE30_PORT1_RX1N — C31, B31

Diff 85 Ohm ±10%

PCIE30_PORT1_RESREF — A33 — PCIE30_1_REF — R1807 200R 1% R0201

PCIE30_PORT1_AVDD0V75 — H24 — VDDA_0V75
C1814 1uF X5R 6.3V C0201
C1815 4.7uF X5R 6.3V C0402_BGA

PCIE30_PORT1_AVDD1V8 — H23 — VCCA_1V8
C1812 100nF X5R 6.3V C0201
C1813 4.7uF X5R 6.3V C0402_BGA

RK3588
BGA1088_23R00X23R00X2R00

Note:
Caps of between dashed green lines and U1000 should be placed under the U1000 package.
Other caps should be placed close to the U1000 package

Rockchip Confidential

Rockchip Electronics Co., Ltd			
Project:	TB_RK3588_CoreBoard		
File:	18.RK3588_PCIE30/PCIE20/SATA30		
Date:	Wednesday, March 30, 2022	Rev:	V1.0
Designed by: Zhangdz	Reviewed by:	Sheet:	18 of 43

RK3588_J(VCCIO5 Domain)

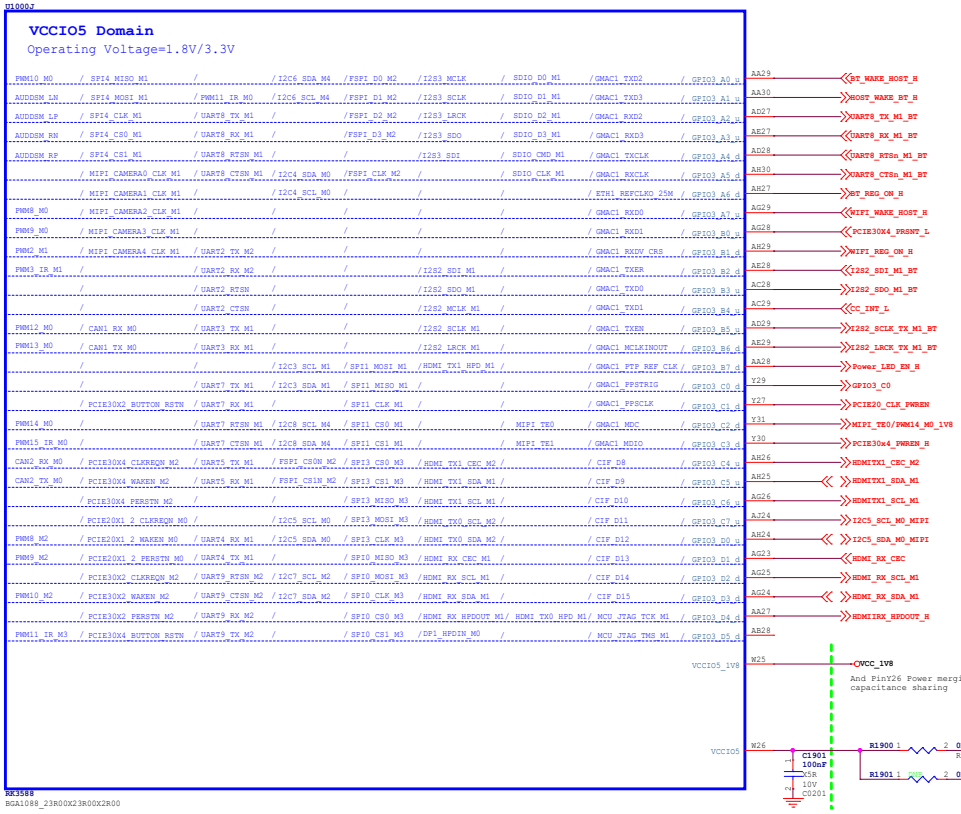

RK3588_K(VCCIO6 Domain)

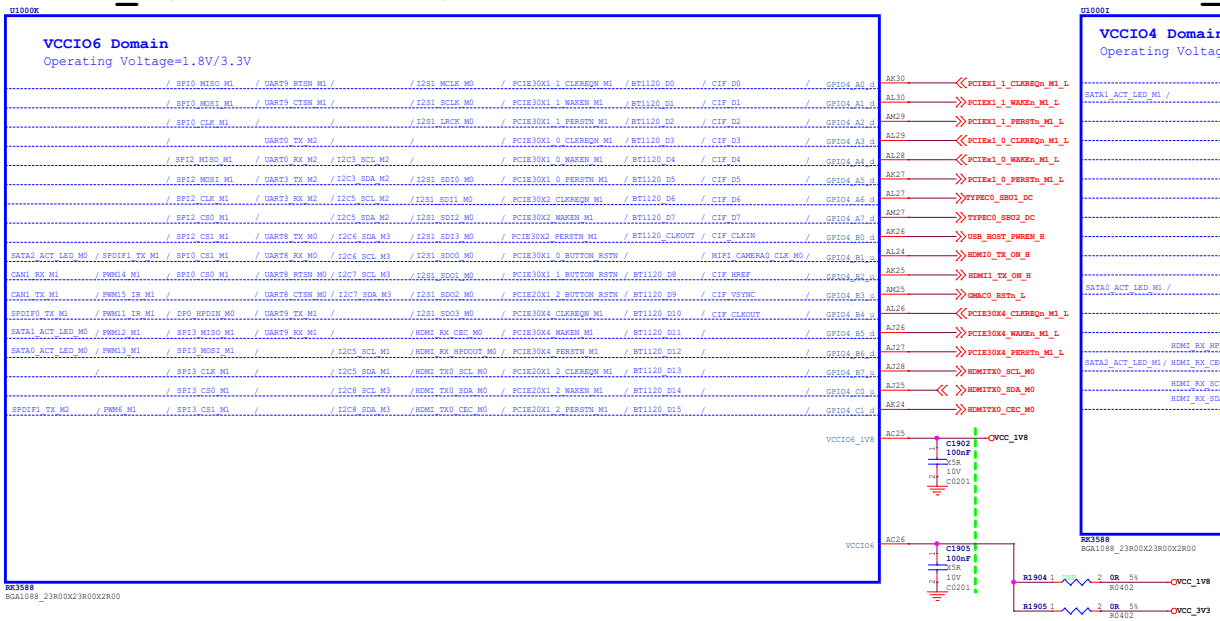

RK3588_I(VCCIO4 Domain)

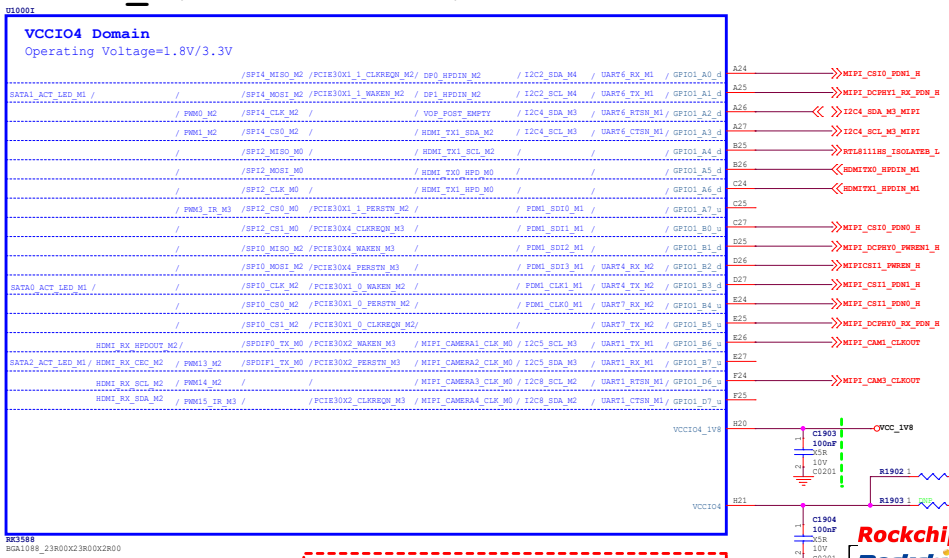

Note:
Caps of between dashed green lines and U1000 should be placed under the U1000 package.
Other caps should be placed close to the U1000 package

Rockchip Confidential

Rockchip Electronics Co., Ltd			
Project:	TB_RK3588_CoreBoard		
File:	19.RK3588_1.8V/ 3.3V GPIO		
Date:	Wednesday, March 30, 2022	Rev:	V1.0
Designed by: Zhangdz	Reviewed by:	Sheet:	19 of 43

VCC_1V1_NLDO_S3

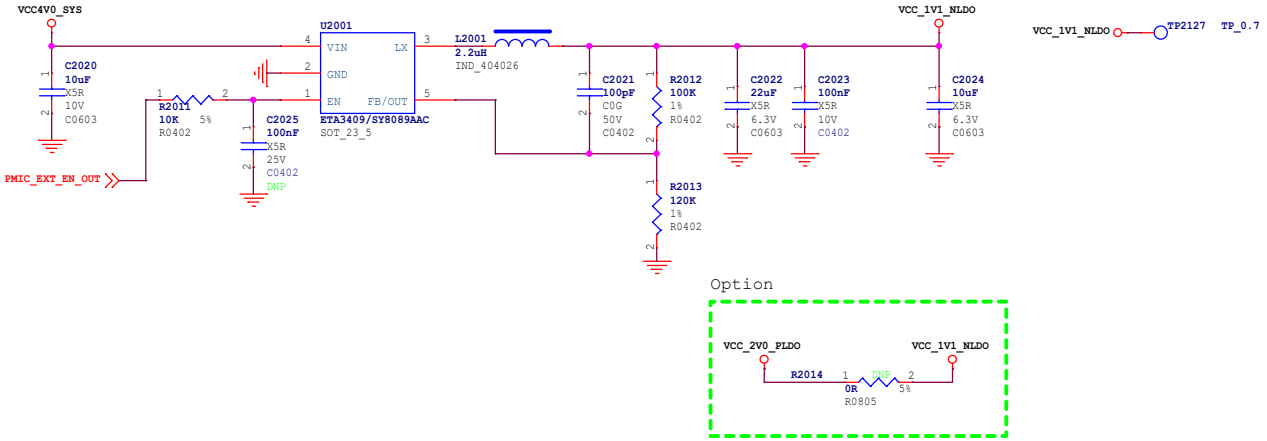

VCC_1V1_NLDO — TP2127 TP_0.7

Rockchip Confidential

Rockchip	Rockchip Electronics Co., Ltd				
Project:	TB_RK3588_CoreBoard				
File:	20.Power_DC IN				
Date:	Monday, December 20, 2021			Rev:	V1.0
Designed by:	Zhangdz	Reviewed by:	Default	Sheet:	20 of 43

PMIC RK806-1 BUCK

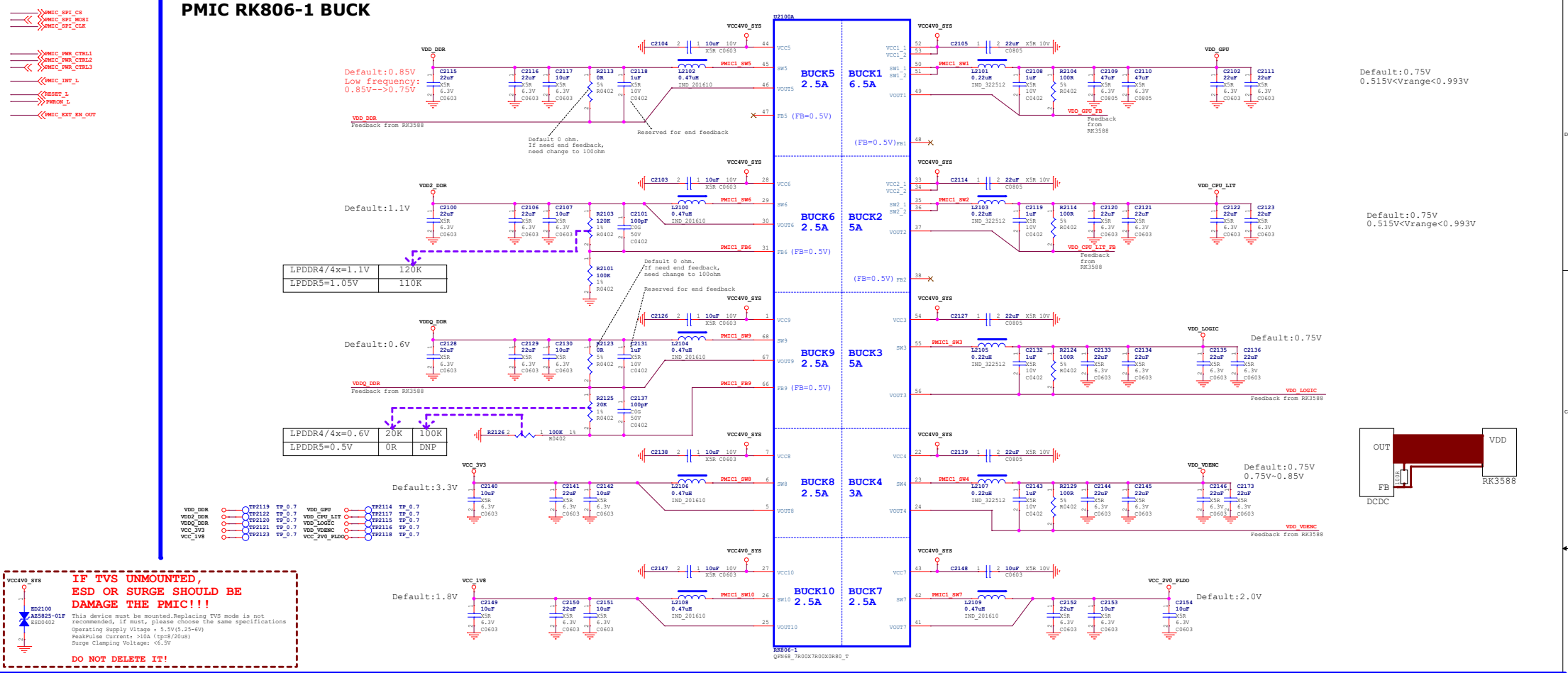

IF TVS UNMOUNTED, ESD OR SURGE SHOULD BE DAMAGE THE PMIC!!!

This device must be mounted.Replacing TVS mode is not recommended, if must, please choose the same specifications

Operating Supply Vltage : 5.5V(5.25-6V)
PeakPulse Current: >10A (tp=8/20uS)
Surge Clamping Voltage: <6.5V

DO NOT DELETE IT!

PMIC RK806-1 Managerment

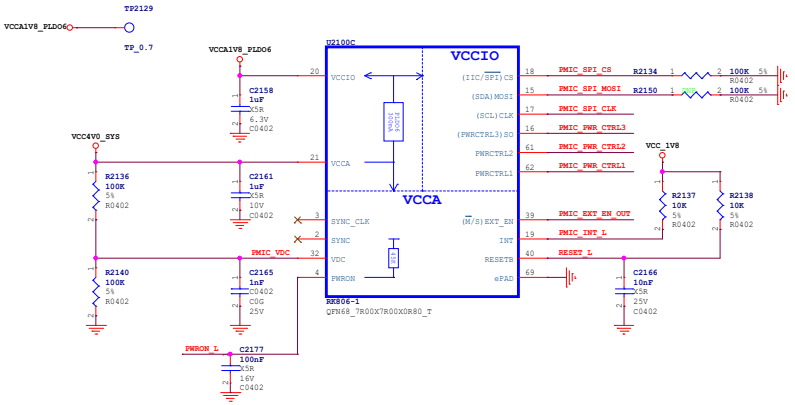

PMIC RK806-1 LDO

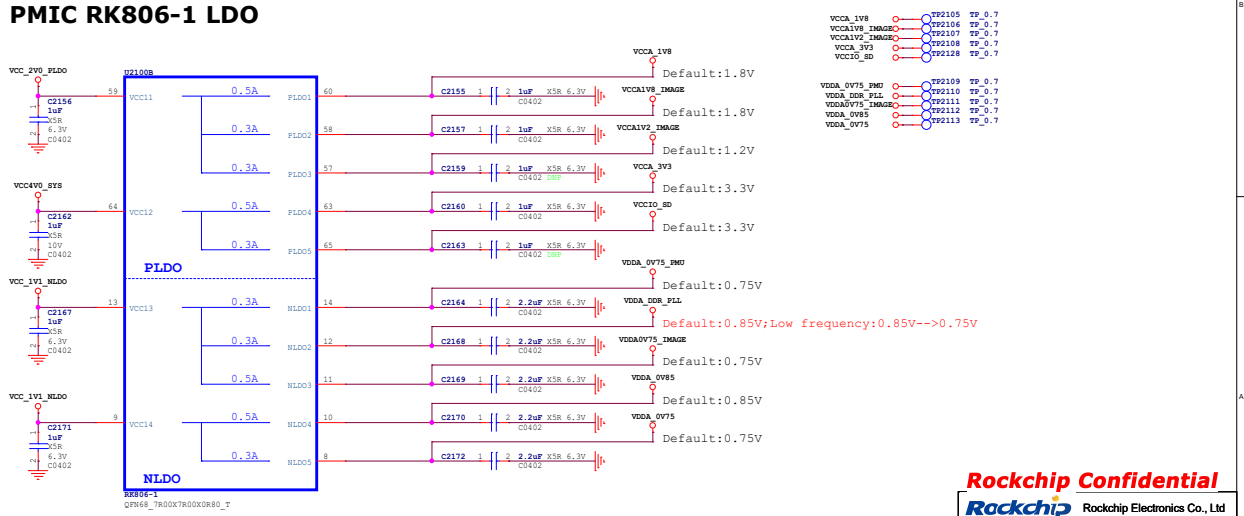

Rockchip Confidential

Rockchip Electronics Co., Ltd			
Project:	TB_RK3588_CoreBoard		
File:	21.Power-PMIC_RK806-1		
Date:	Wednesday, March 30, 2022	Rev:	V1.0
Designed by: Zhangtz	Reviewed by: Default	Sheet:	21 of 43

VDD_CPU_BIG0

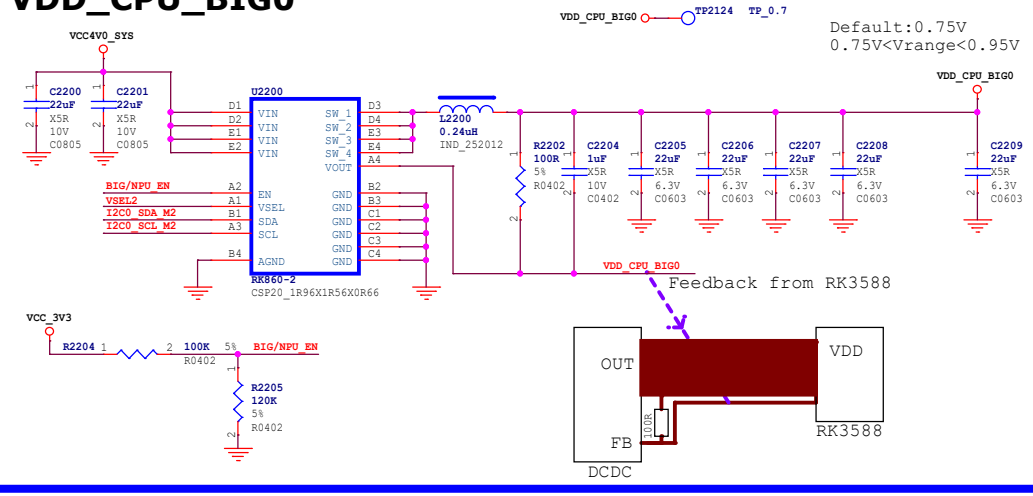

VDD_CPU_BIG1

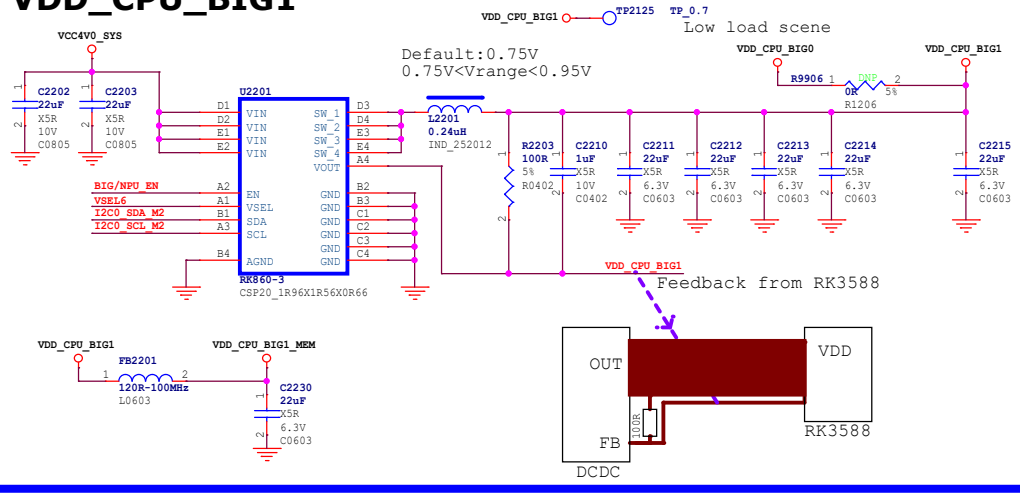

VDD_NPU

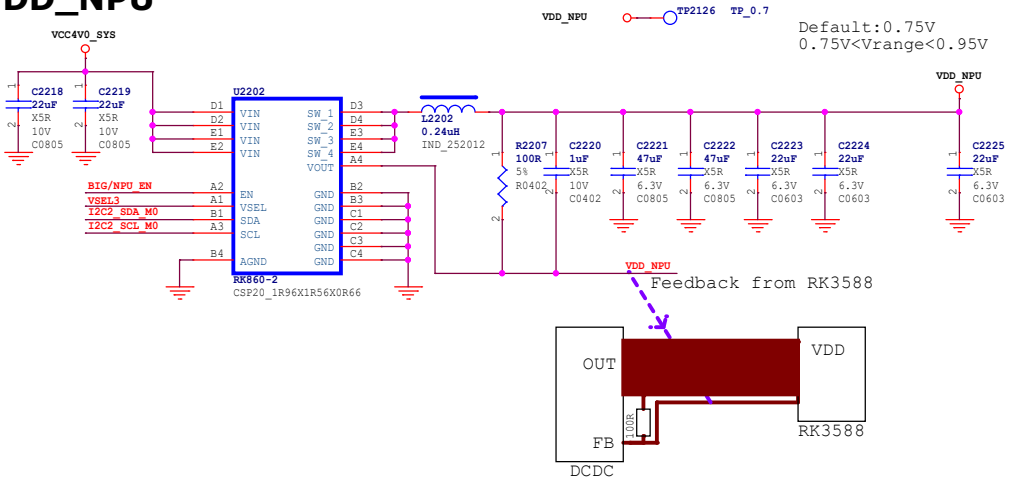

Rockchip Confidential

Rockchip	Rockchip Electronics Co., Ltd				
Project:	TB_RK3588_CoreBoard				
File:	22.Power_Ext Discrete				
Date:	Wednesday, March 30, 2022			Rev:	V1.0
Designed by:	Zhangdz	Reviewed by:	Default	Sheet:	22 of 43

LPDDR4/4X

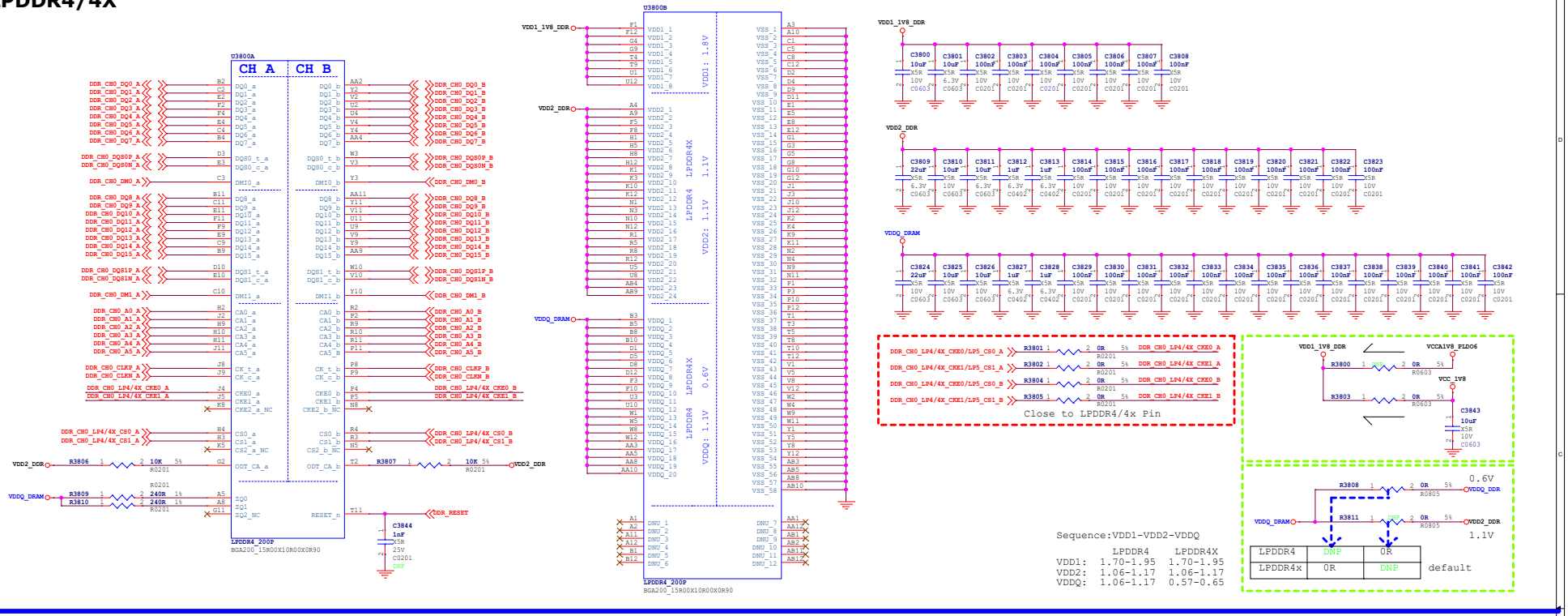

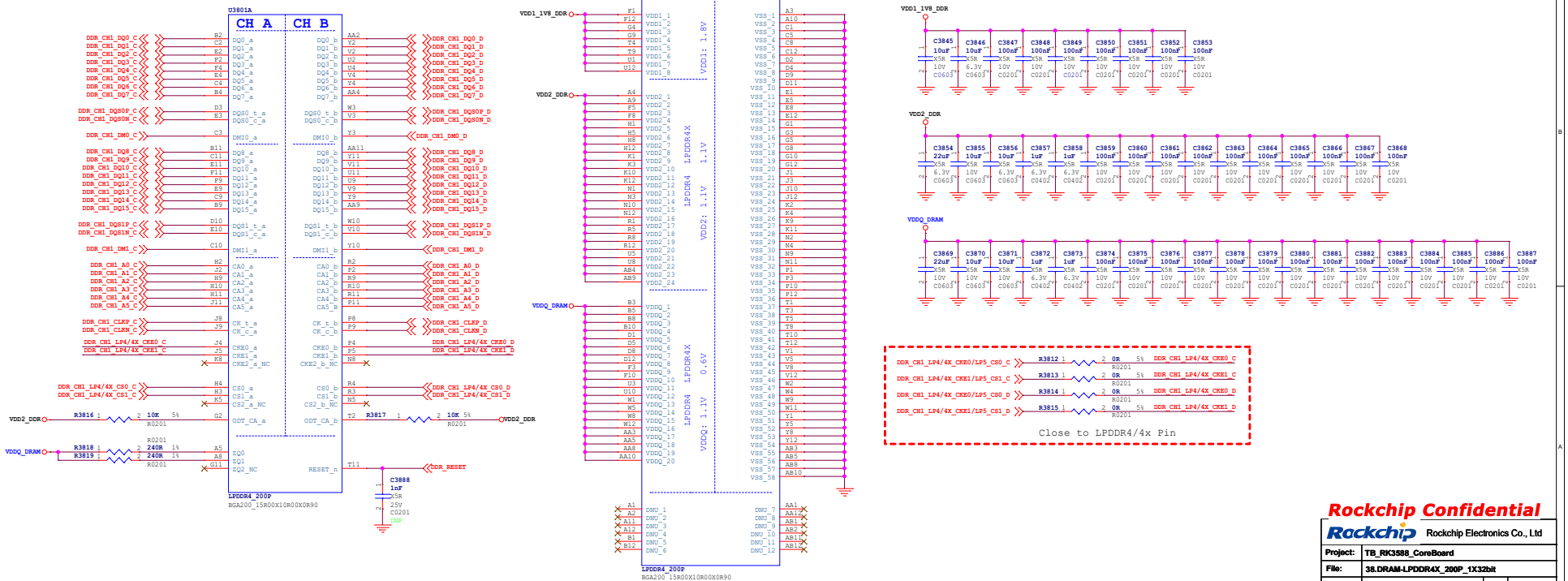

Rockchip Confidential

Rockchip	Rockchip Electronics Co., Ltd		
Project:	TB_RK3588_CoreBoard		
File:	38.DRAM-LPDDR4X_200P_1X32bit		
Date:	Monday, December 20, 2021	Rev:	V1.0
Designed by:	Zhangtz	Reviewed by:	Sheet: 24 of 43

eMMC Flash

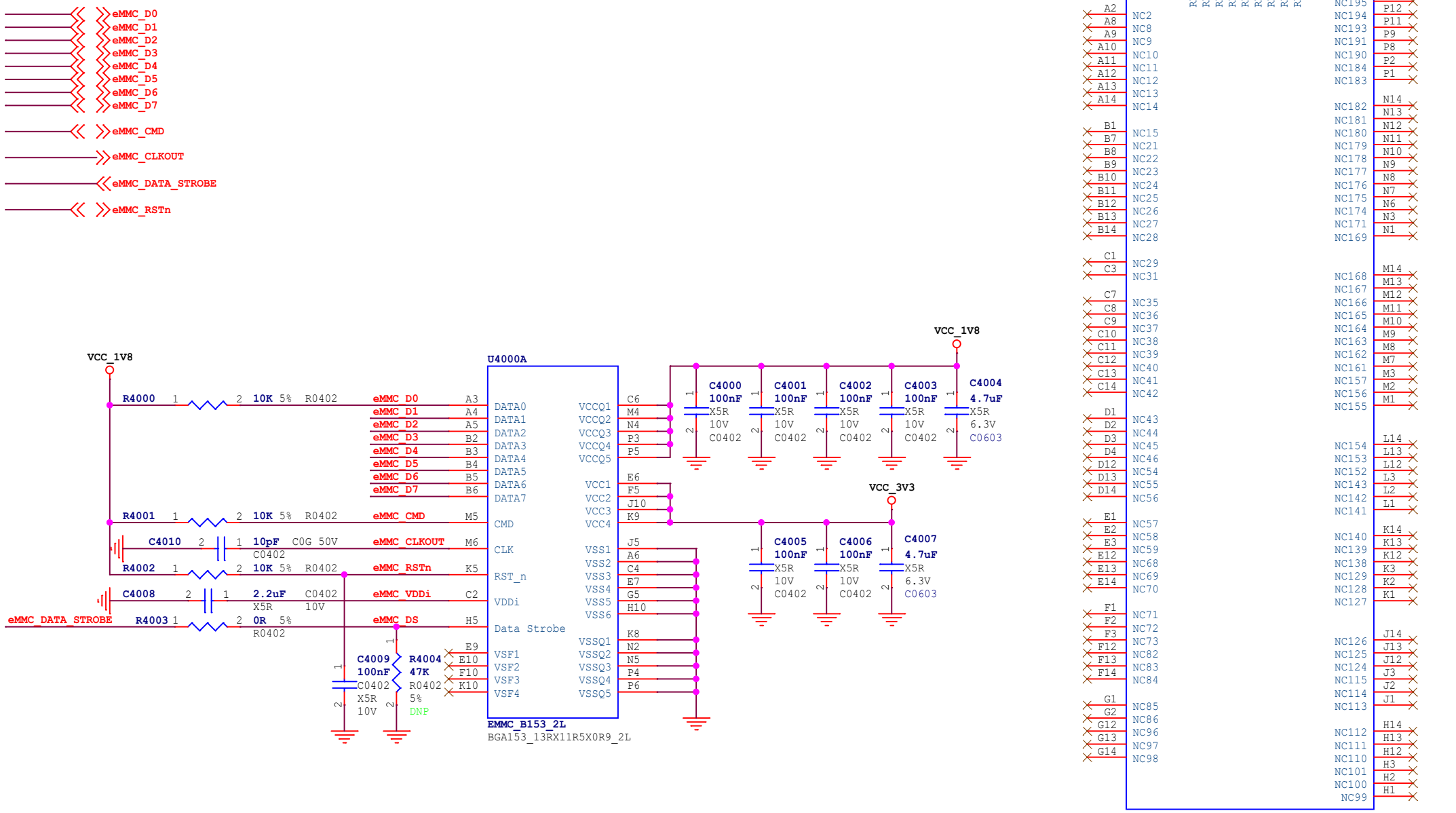

Rockchip Confidential

Rockchip Electronics Co., Ltd					
Project:	TB_RK3588_CoreBoard				
File:	40.Flash-eMMC Flash				
Date:	Wednesday, March 30, 2022			Rev:	V1.0
Designed by:	Zhangdz	Reviewed by:	Default	Sheet:	25 of 43

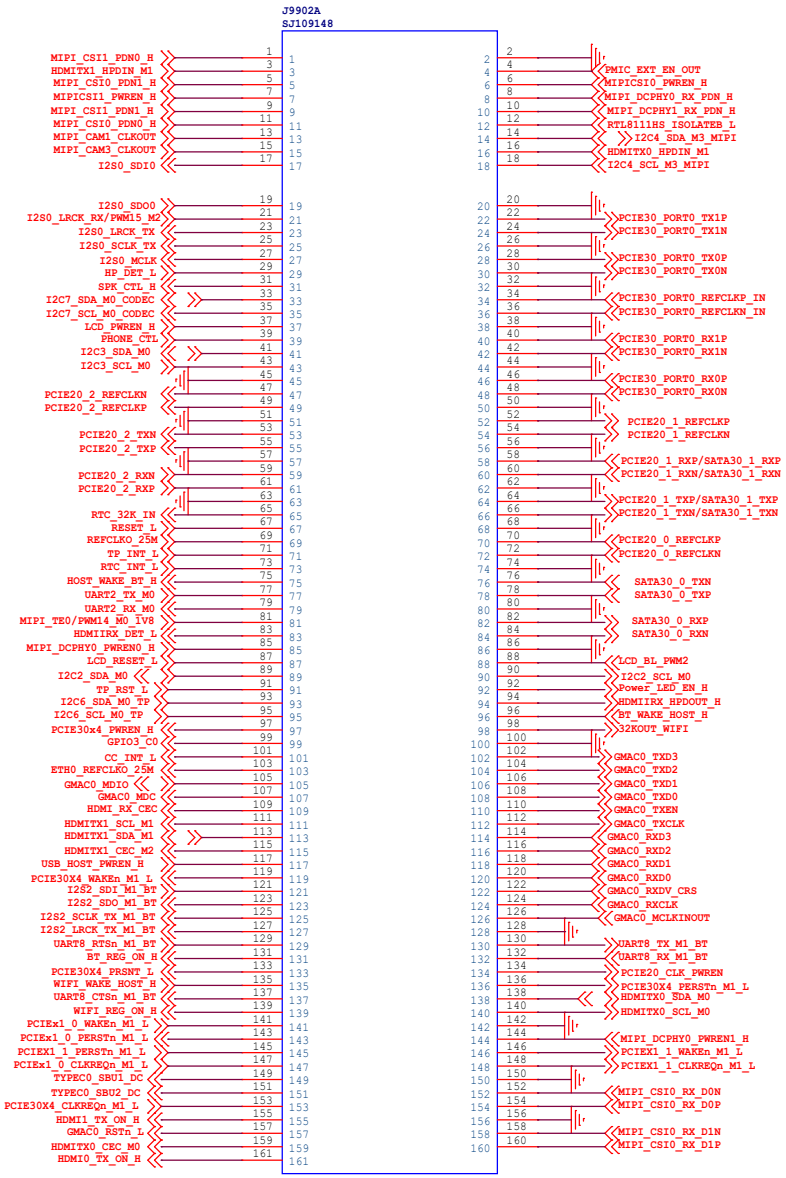

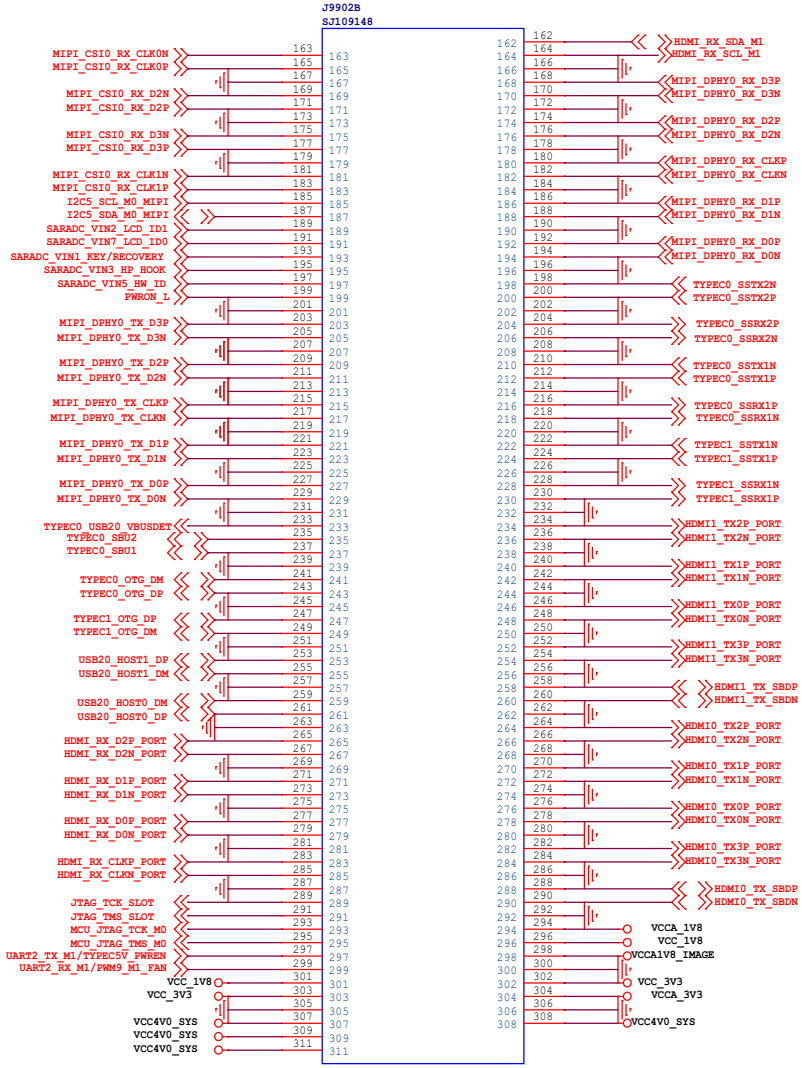

Rockchip Confidential

Rockchip Electronics Co., Ltd			
Project:	TB_RK3588_CoreBoard		
File:	98.Golden-finger		
Date:	Wednesday, March 30, 2022	Rev:	V1.0
Designed by: Zhangdz	Reviewed by: <Checker>	Sheet:	42 of 43

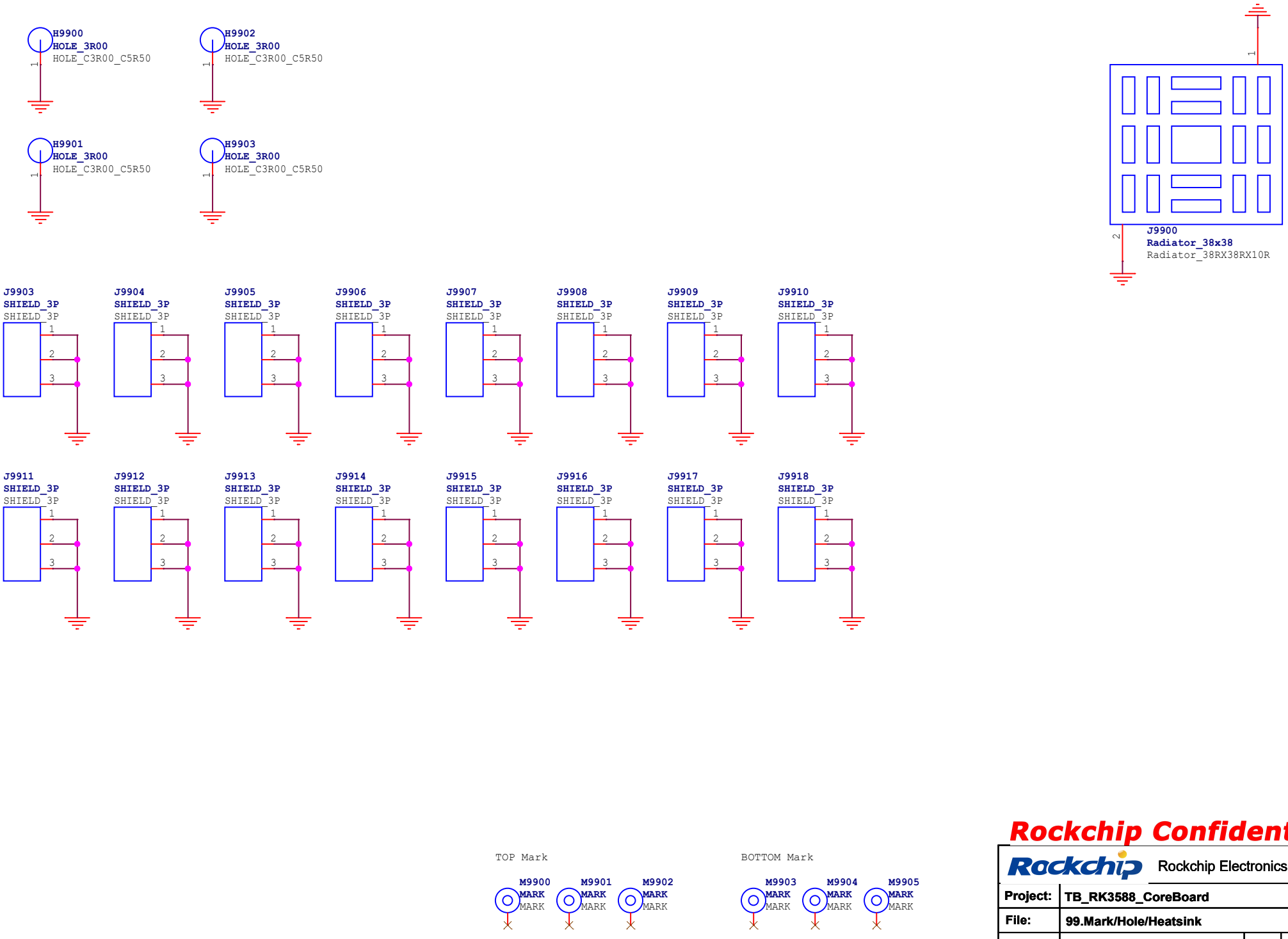

Rockchip Confidential

Rockchip Electronics Co., Ltd					
Project:	TB_RK3588_CoreBoard				
File:	99.Mark/Hole/Heatsink				
Date:	Tuesday, December 21, 2021			Rev:	V1.0
Designed by:	Zhangdz	Reviewed by:	Default	Sheet:	43 of 43