MARK_C73_MAIN

Schematic Revision 2.0

Title	Page
COVER	1
SYSTEM-ARCHITECTURE	2
T23-IO_CLK_FLASH_PWR	3
FE_USB-WIFI	4
SENSOR	5
SD_AUDIO	6
MOTOR_RST_LED	7
POWER-SUPPLY	8
REVISION-HISTORY	9

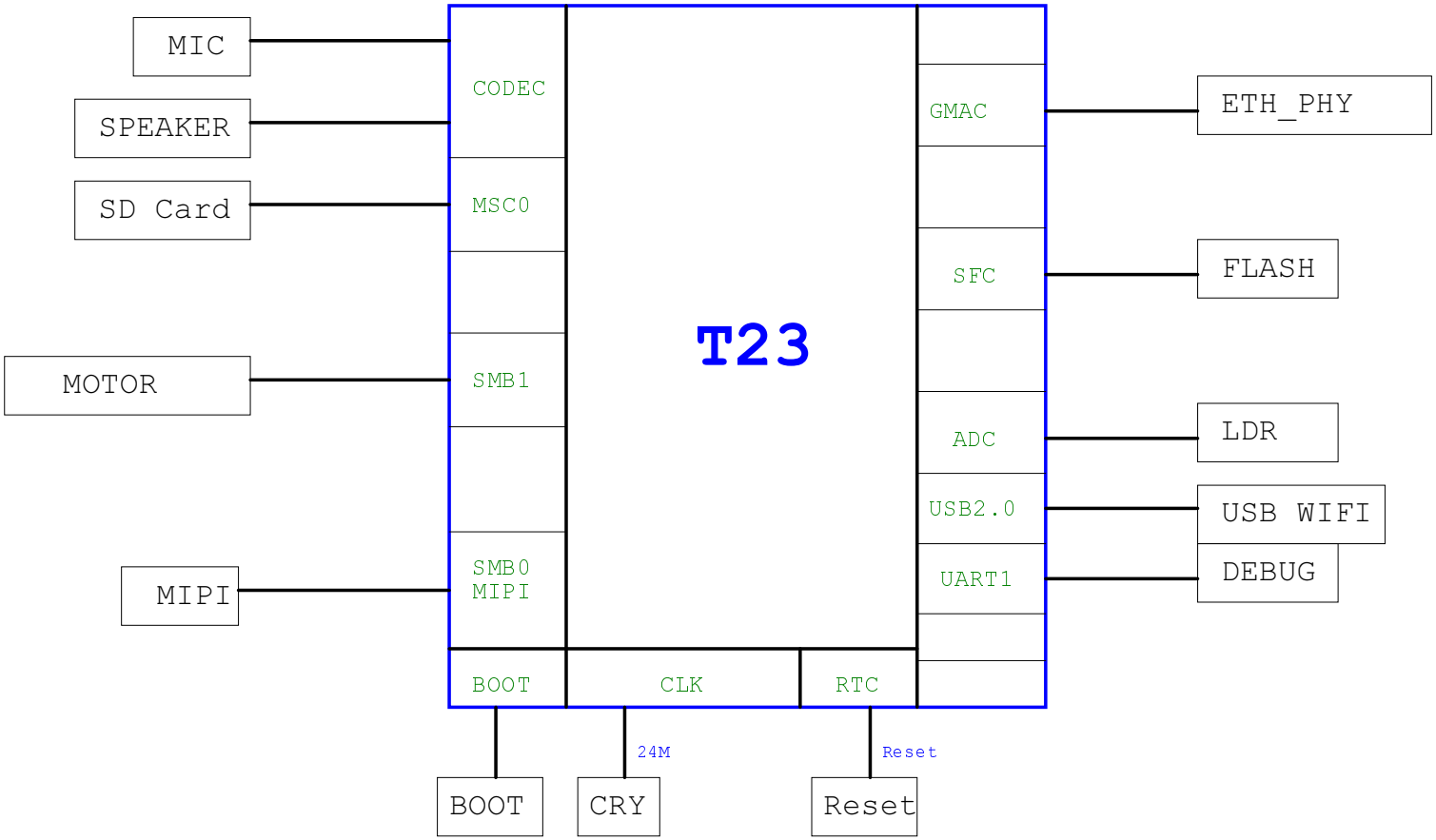

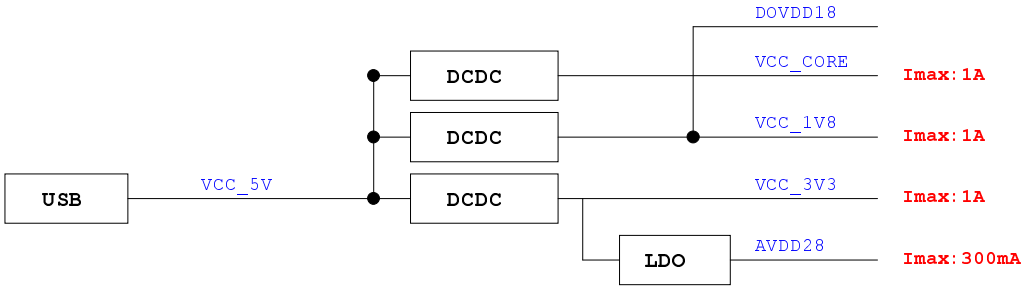

<Core Design>

INGENIC SEMICONDUCTOR CO.,LTD

Title	MARK_C73_MAIN	
Size A3	Document Number SYSTEM-ARCHITECTURE	Rev 2.0
Date: Monday, November 25, 2024	Sheet 2 of 9	

T23-IO_CLK_FLASH_PWR

1.Pay attention to The MIPI Layout
2.MIPI Differential input impedance 100 Ohm ±10%
3.MIPI Differential pair equal length <100mil
4.MIPI Differential pair P/N equal length <10mil

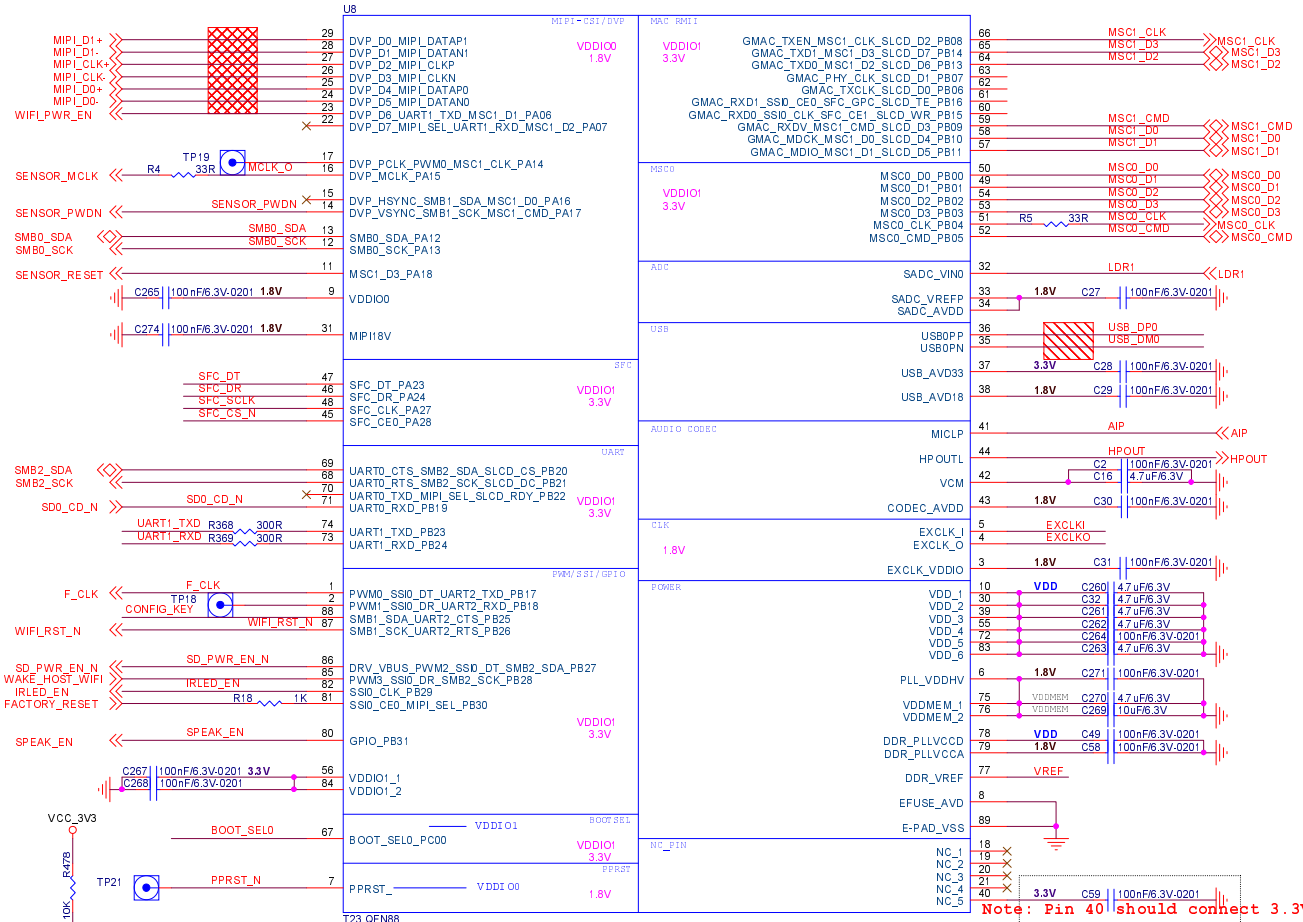

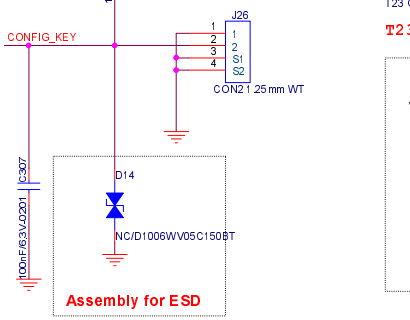

T23 can be Pin to Pin with T31 QFN88 refer to this design

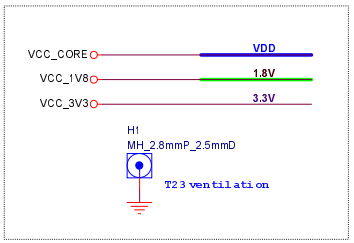

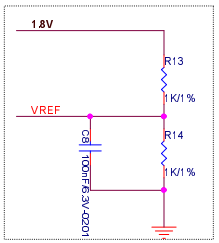

Note: Pin 40 should connect 3.3V power for T31

Pay attention to The USB Layout
1.USB Differential input impedance 90 Ohm ±10%
2.USB Differential pair P/N equal length <10mil

VDD:
Power Plane Width >40mil/1oZ

VCC_1V8(VDDMEM):
Power Plane Width >40mil/1oZ

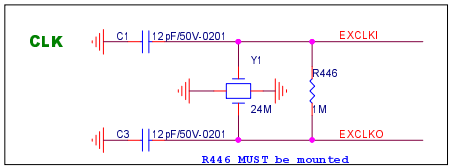

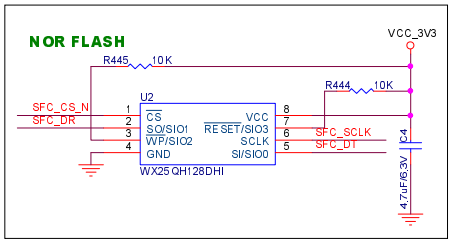

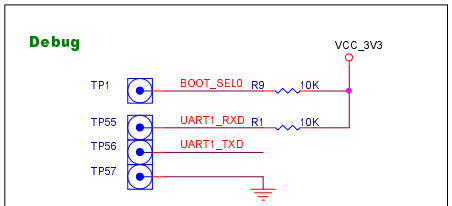

BOOT_SEL1	BOOT_SEL0	BOOT FROM
0	0	SD card : MSC0
0	1	SFC : SPI0/SSI_CE0

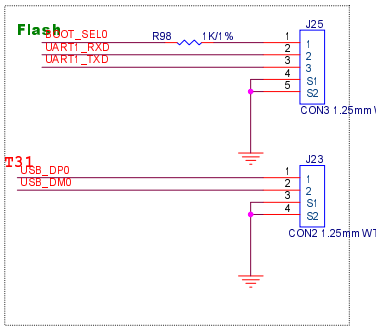

<Core Design>

INGENIC SEMICONDUCTOR CO.,LTD

Title	MARK_C73_MAIN	
Size A3	Document Number T31-IO_CLK_FLASH_PWR	Rev 2.0
Date: Monday, November 25, 2024	Sheet 3 of 9	

SDIO-WIFI

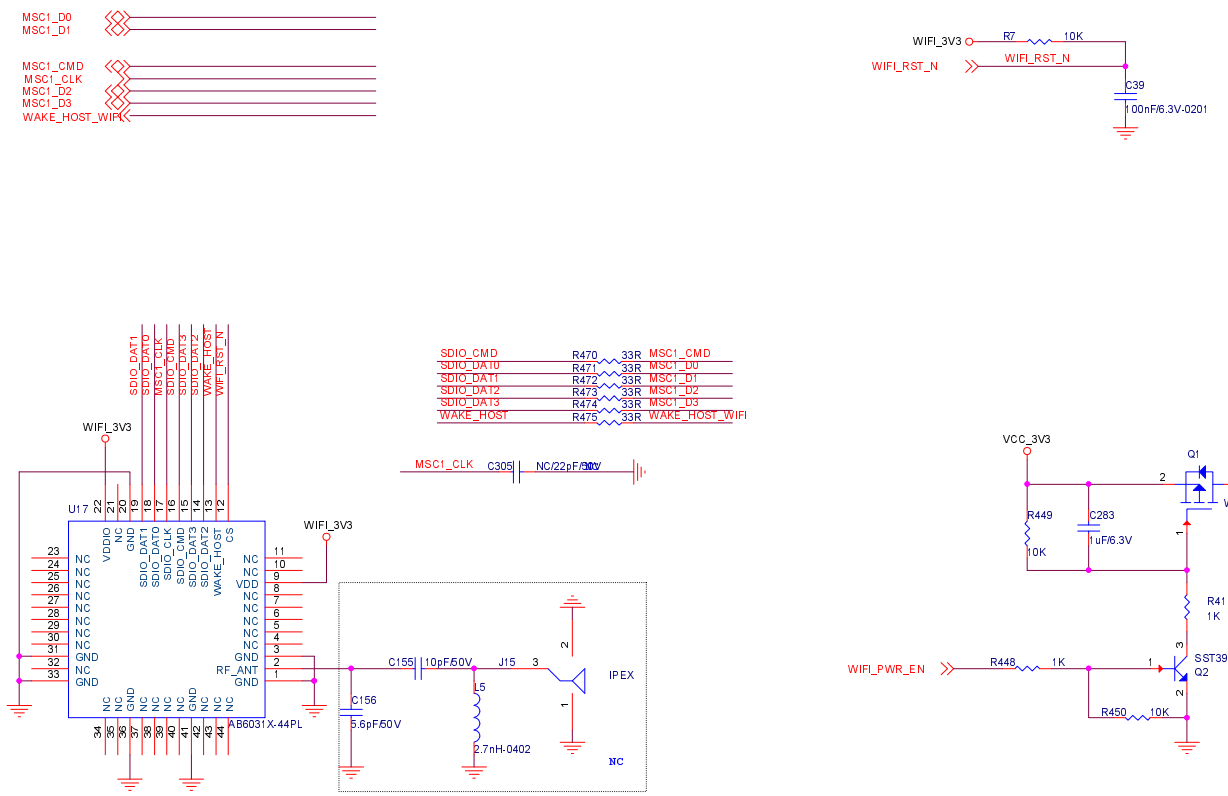

<Core Design>

INGENIC SEMICONDUCTOR CO.,LTD

Title	MARK_C73_MAIN	
Size A3	Document Number FE_USB-WIFI	Rev 2.0
Date: Monday, November 25, 2024	Sheet 4 of 9	

SENSOR

CIS

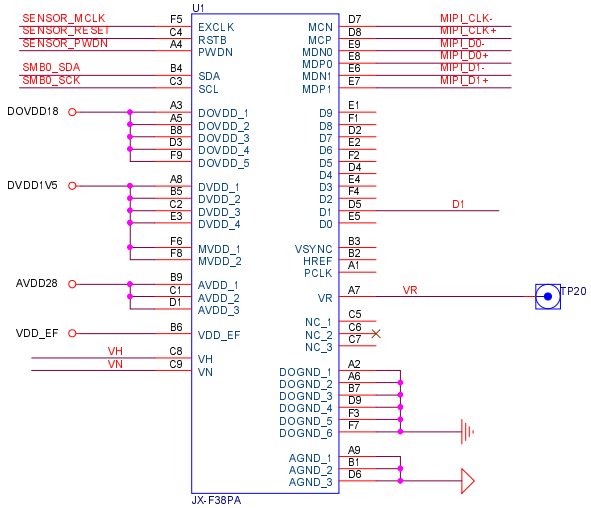

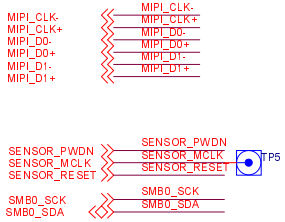

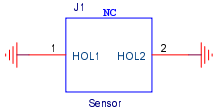

Sensor power

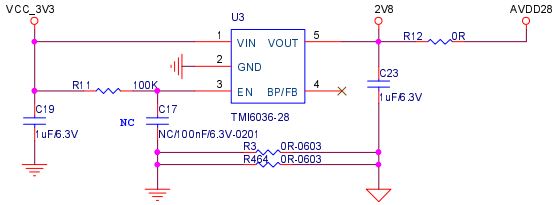

Note: Compatible with JW7807-28SOTA

SID: D0/D1

0x80	0	0
0x84	1	0
0x88	0	1
0x8C	1	1

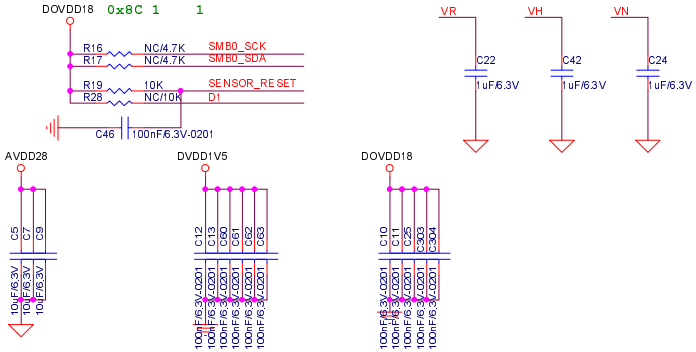

Pin A1:10uF+100nF/NC
Pin A7:10uF+100nF
Pin C7:10uF/NC+100nF/NC

Pin B5:4.7uF+100nF
Pin C1:4.7uF/NC+100nF
Pin D6:4.7uF/NC+100nF

Pin E2:4.7uF/NC+100nF/NC
Pin D4:4.7uF/NC+100nF

<Core Design>

INGENIC SEMICONDUCTOR CO.,LTD		
Title: MARK_C73_MAIN		
Size: A3	Document Number: SENSOR	Rev: 2.0
Date: Monday, November 25, 2024	Sheet 5 of 9	

SD_AUDIO

SD CARD

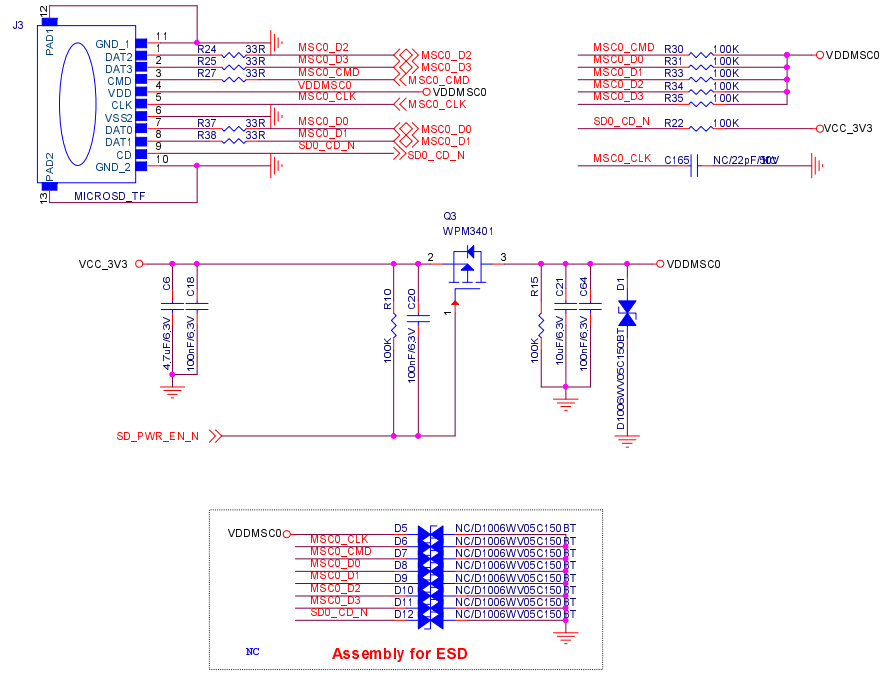

CONNECTOR

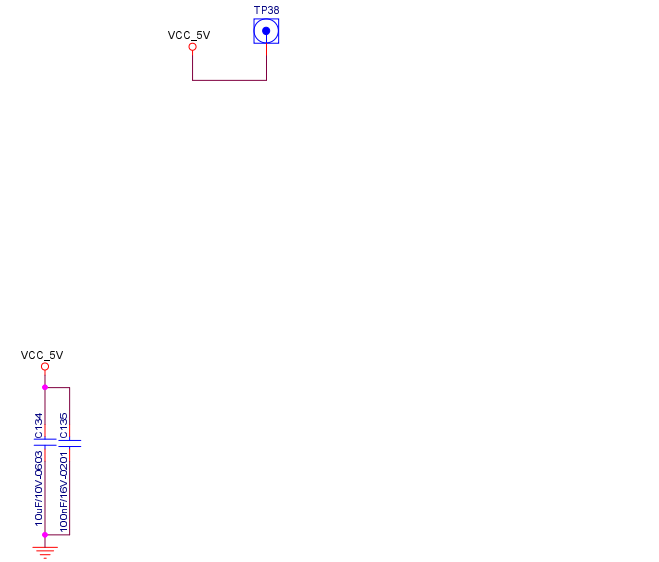

SPK

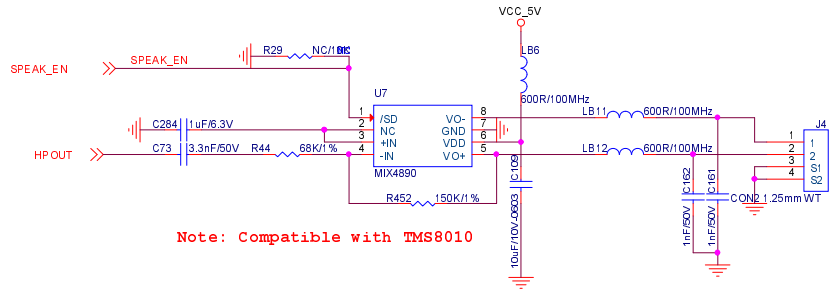

MIC

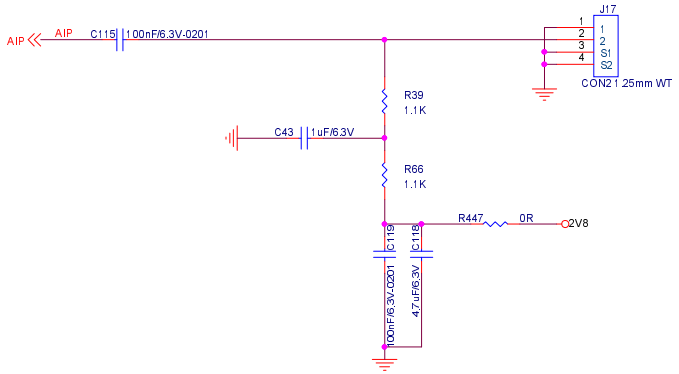

<Core Design>

INGENIC SEMICONDUCTOR CO.,LTD

Title	MARK_C73_MAIN	
Size A3	Document Number SD_AUDIO	Rev 2.0
Date: Monday, November 25, 2024	Sheet 6 of 9	

MOTOR_RST_LED

MOTOR

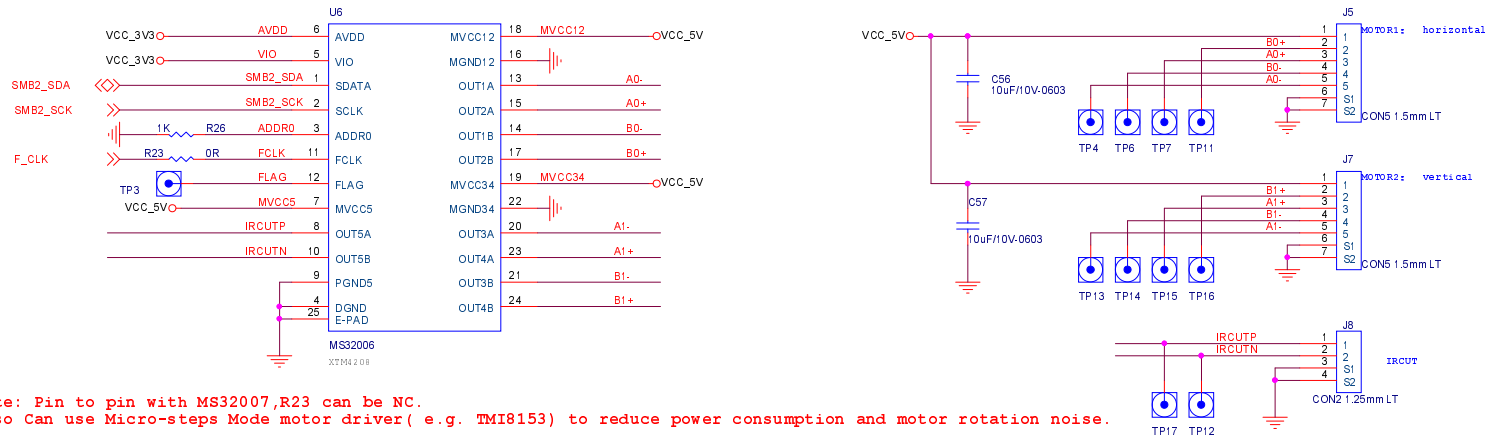

Note: Pin to pin with MS32007,R23 can be NC.
Also Can use Micro-steps Mode motor driver(e.g. TMI8153) to reduce power consumption and motor rotation noise.

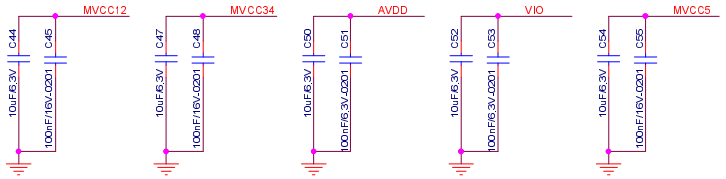

LED 光敏

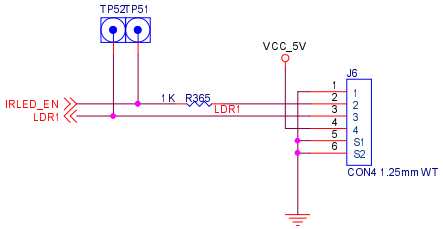

IR_DET Range: 0~1.8V

RST

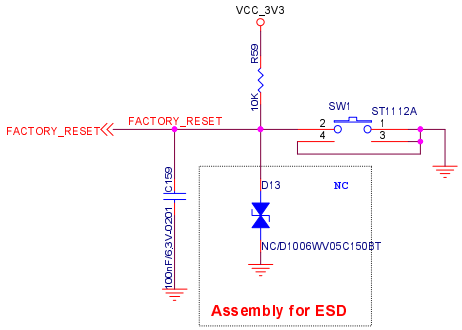

<Core Design>

	INGENIC SEMICONDUCTOR CO.,LTD
Title	MARK_C73_MAIN
Size A3	Document Number MOTOR_RST_LED
Rev	2.0
Date:	Monday, November 25, 2024
Sheet	7 of 9

POWER-SUPPLY

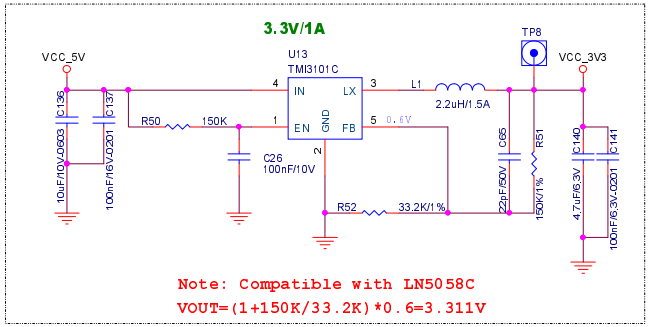

Note: Compatible with LN5058C
VOUT=(1+150K/33.2K)*0.6=3.311V

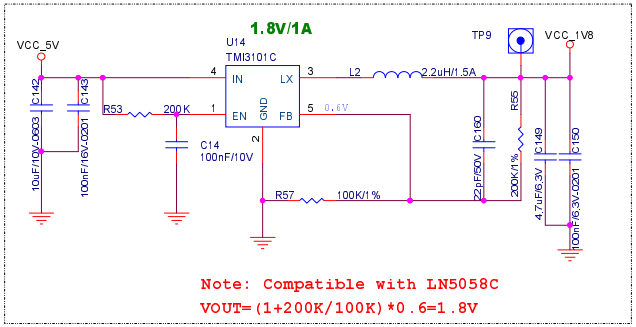

Note: Compatible with LN5058C
VOUT=(1+200K/100K)*0.6=1.8V

Power Up Sequence:VCC_CORE->VCC_3V3->VCC_1V8

Power-On Time Is Less Than 5ms

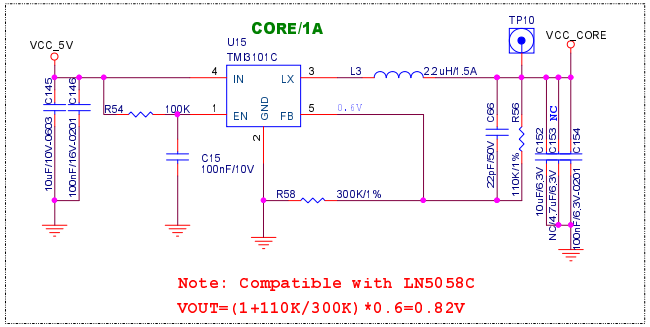

Note: Compatible with LN5058C
VOUT=(1+110K/300K)*0.6=0.82V

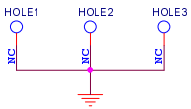

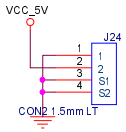

<Core Design>

	INGENIC SEMICONDUCTOR CO.,LTD
Title	MARK_C73_MAIN
Size A3	Document Number POWER-SUPPLY
Rev	2.0
Date:	Monday, November 25, 2024
Sheet	8 of 9

Date	Revision	Change
Nov 08 2023	Rev2.0	

<Core Design>

INGENIC SEMICONDUCTOR CO.,LTD

Title	MARK_C73_MAIN	
Size A3	Document Number REVISION-HISTORY	Rev 2.0
Date: Monday, November 25, 2024	Sheet 9 of 9	