RD_T23_PIKE

Schematic Revision 1.1

Title	Page
COVER	1
SYSTEM-ARCHITECTURE	2
POWER-SUPPLY	3
T23-IO_CLK_FLASH	4
T23-Filter-Capacitor	5
T23-IO_OFFPAGE	6
ETH-RMII	7
SD_AUDIO_WIFI	8
AF-MOTOR_USB	9
BOOT_RST_DEBUG_EFUSE_LED	10
SLCD	11
DVP_MIPI SWITCH	12
REVISION-HISTORY	13

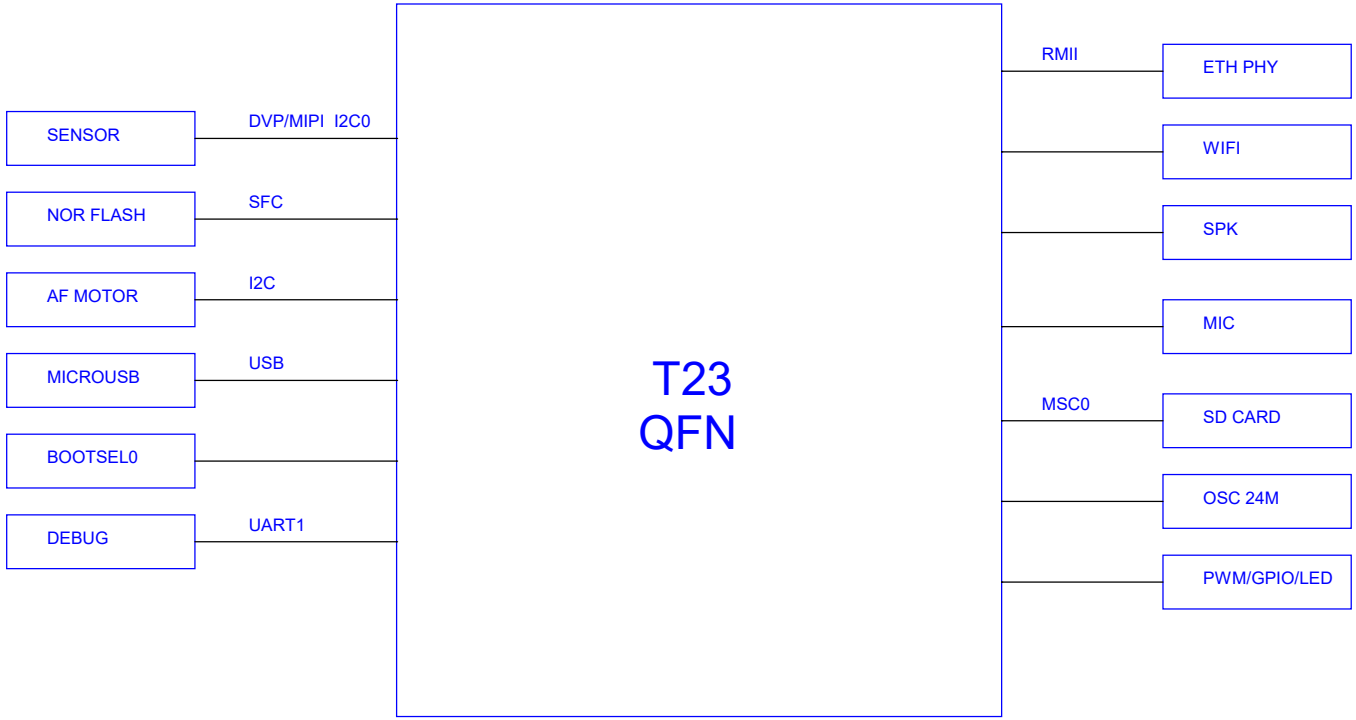

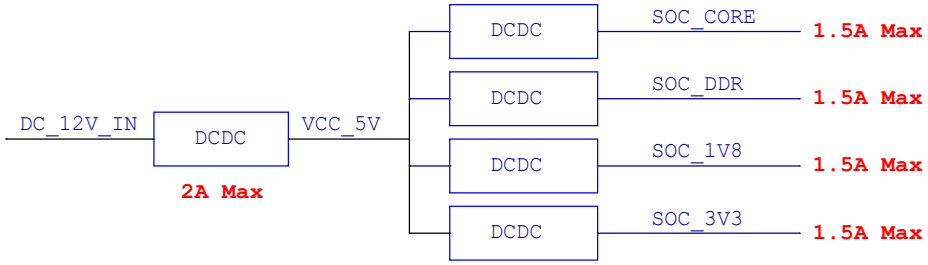

<Core Design>

INGENIC SEMICONDUCTOR CO.,LTD

Title	RD_T23_PIKE	
Size A3	Page Name SYSTEM-ARCHITECTURE	Rev V1.1
Date: Wednesday, March 06, 2024	Sheet 2 of 13	

POWER-SUPPLY

Note: The jumper or the 0Ω-0603 resistance in ---- is used for measuring power consumption and can be removed in the product board.

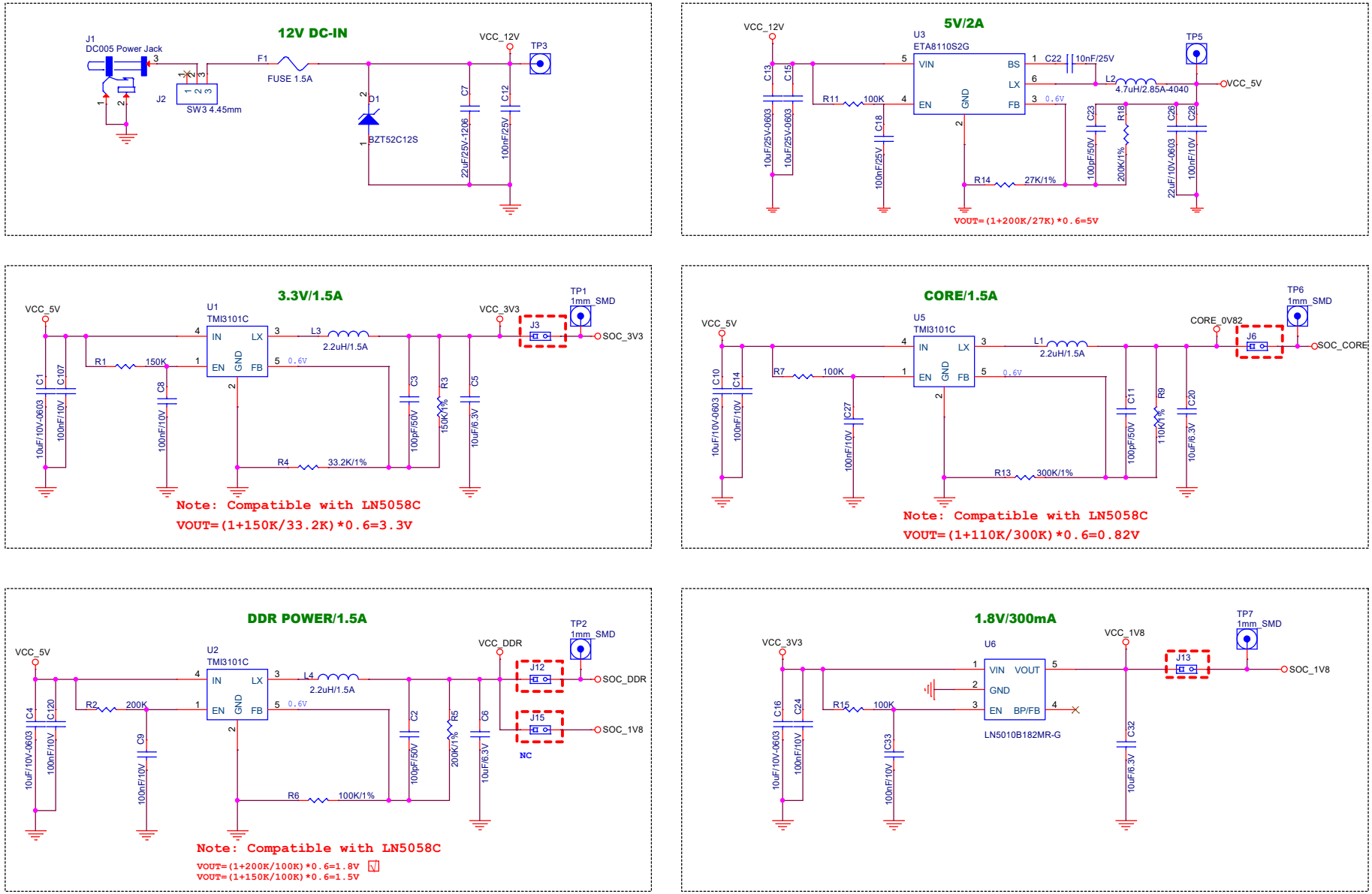

Power Up Sequence:SOC_CORE->SOC_3V3->SOC_1V8(SOC_DDR)

Power-On Time Is Less Than 5ms

<Core Design>

INGENIC SEMICONDUCTOR CO.,LTD		
Title: RD_T23_PIKE		
Size: A3	Page Name: POWER-SUPPLY	Rev: V1.1
Date: Tuesday, March 19, 2024	Sheet 3 of 13	

T23-IO_CLK_FLASH

Note: The 0Ω-0603 resistance in [ ] is used for measuring power consumption and can be removed in the product board.

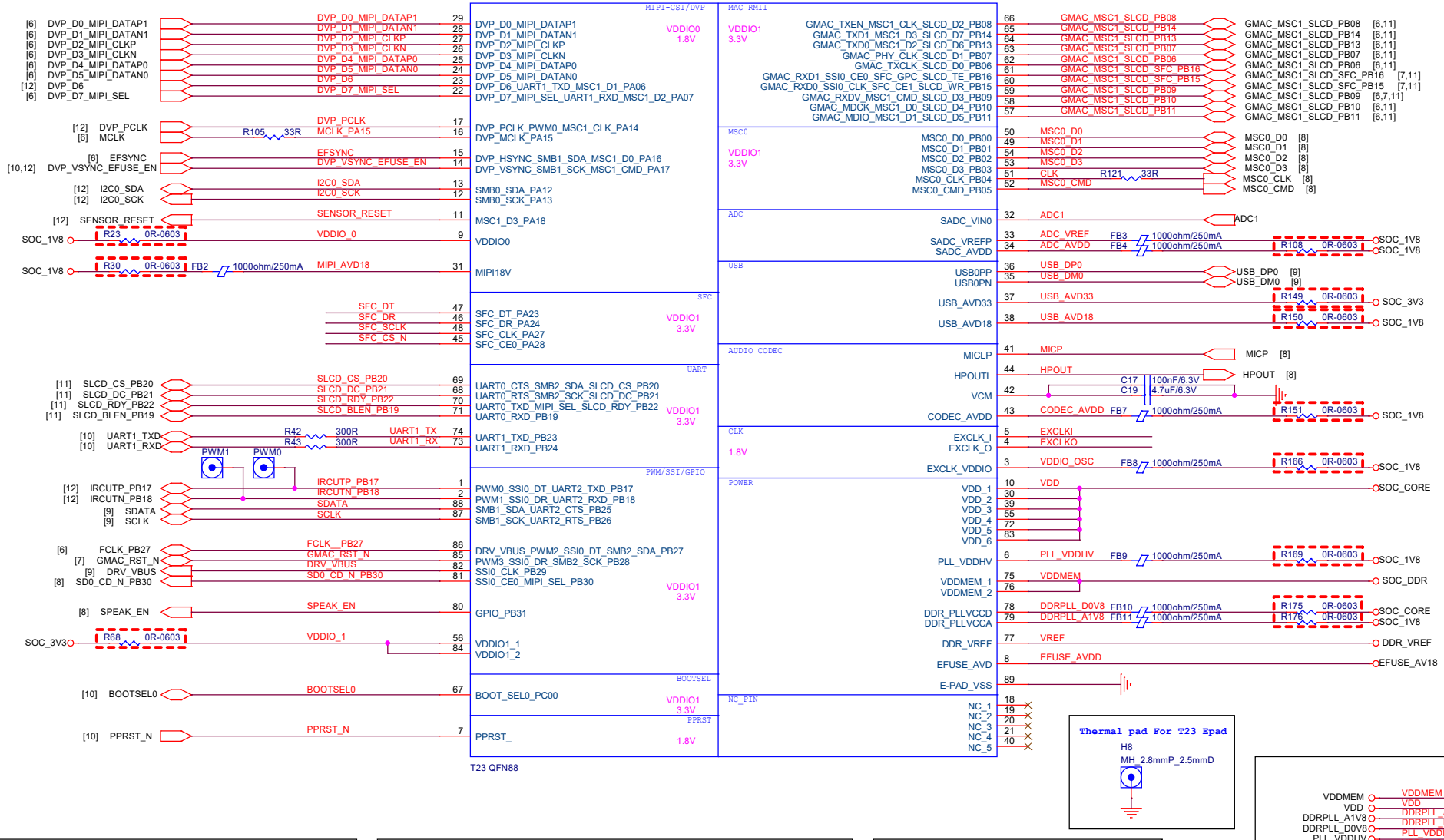

CLK

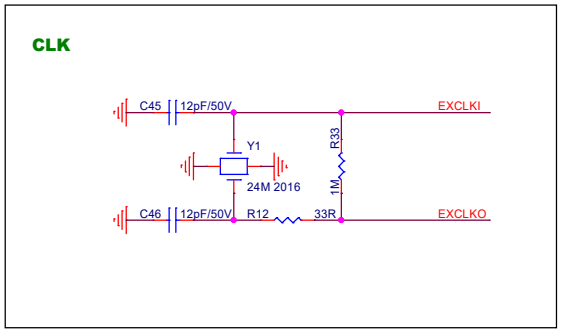

NOR FLASH

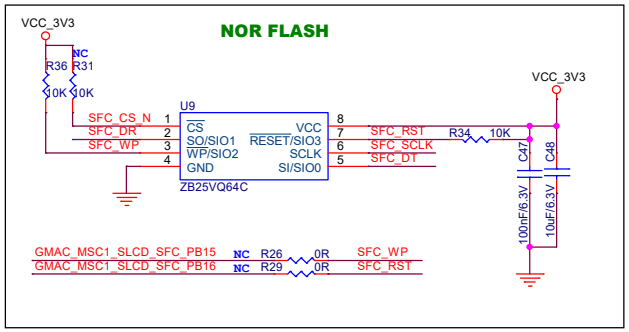

ADC

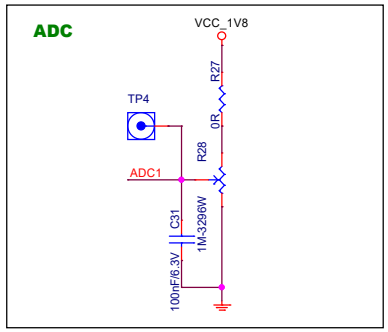

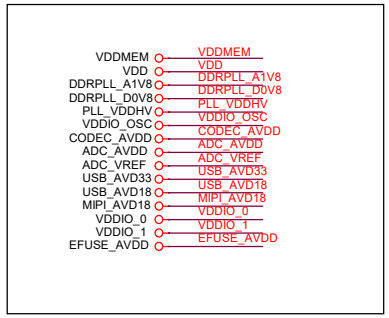

<Core Design>

INGENIC SEMICONDUCTOR CO.,LTD	
Title	RD_T23_PIKE
Size A3	Page Name T23-IO_CLK_FLASH
Rev	V1.1
Date: Wednesday, March 06, 2024	Sheet 4 of 13

T23-Filter-Capacitor

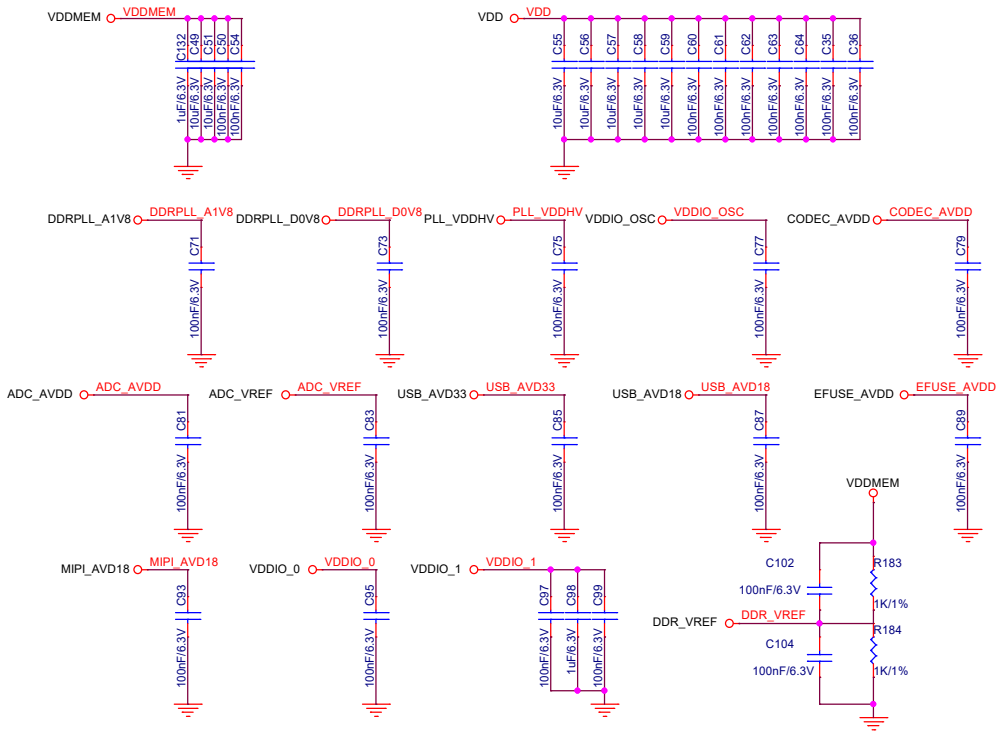

<Core Design>

INGENIC SEMICONDUCTOR CO.,LTD		
Title: RD_T23_PIKE		
Size: A3	Page Name: T23-Filter-Capacitor	Rev: V1.1
Date: Wednesday, March 06, 2024	Sheet 5 of 13	

T23-IO_OFF PAGE

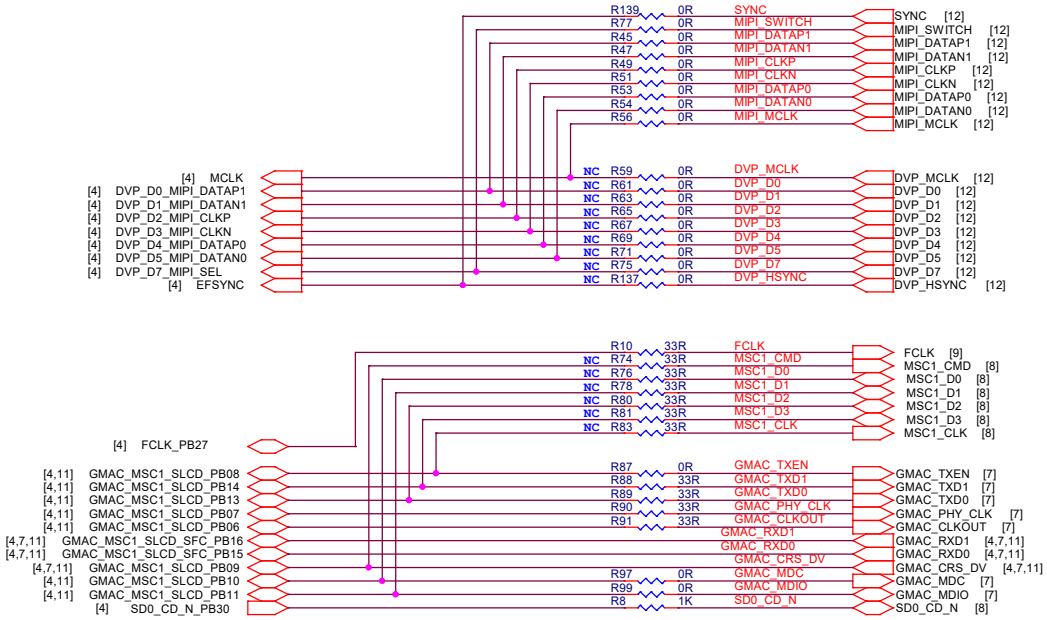

<Core Design>

INGENIC SEMICONDUCTOR CO.,LTD		
Title: RD_T23_PIKE		
Size: A3	Page Name: T23-IO_OFF PAGE	Rev: V1.1
Date: Wednesday, March 06, 2024	Sheet 6 of 13	

ETH

ETH_RMII

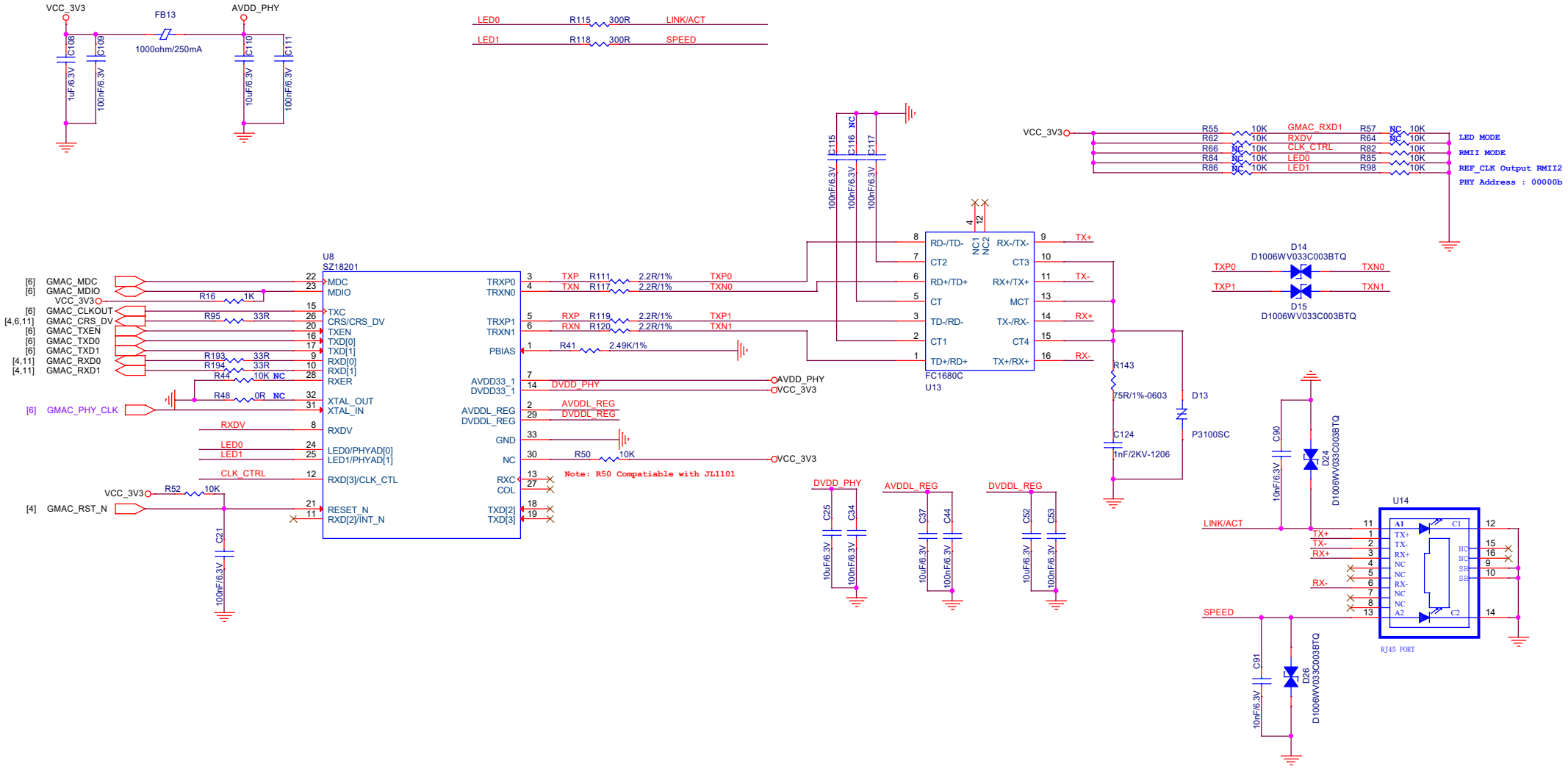

<Core Design>

INGENIC SEMICONDUCTOR CO.,LTD		
Title: RD_T23_PIKE		
Size: A3	Page Name: ETH-RMII	Rev: V1.1
Date: Wednesday, March 06, 2024	Sheet 7 of 13	

SD_AUDIO_WIFI

Note: The 0Ω-0603 resistance in [redacted] is used for measuring power consumption and can be removed in the product board.

SD CARD

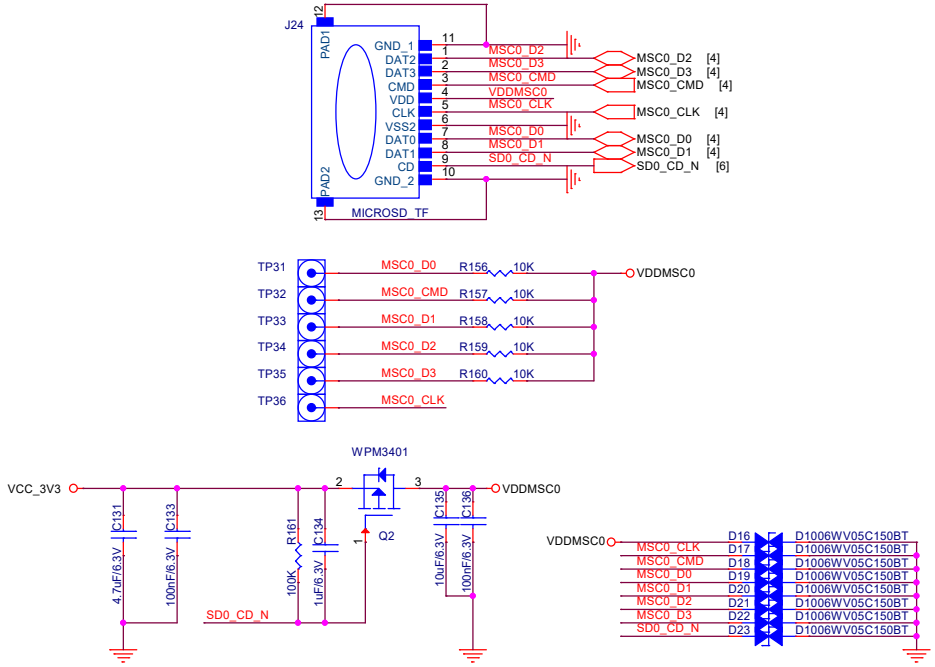

AUDIO

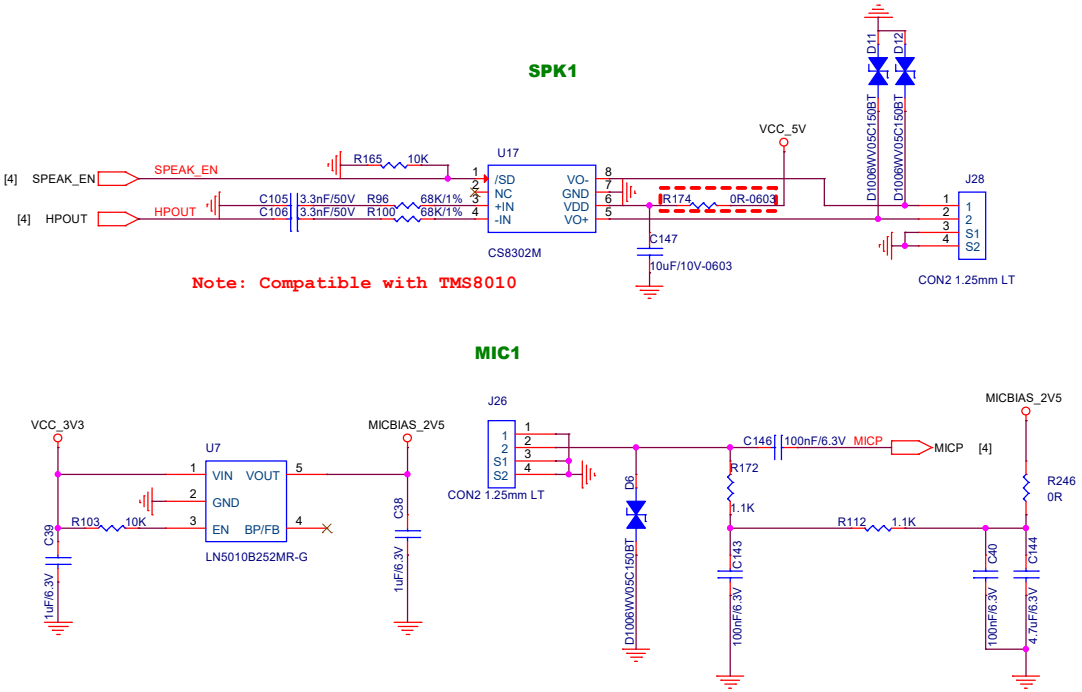

WIFI CONNECTOR

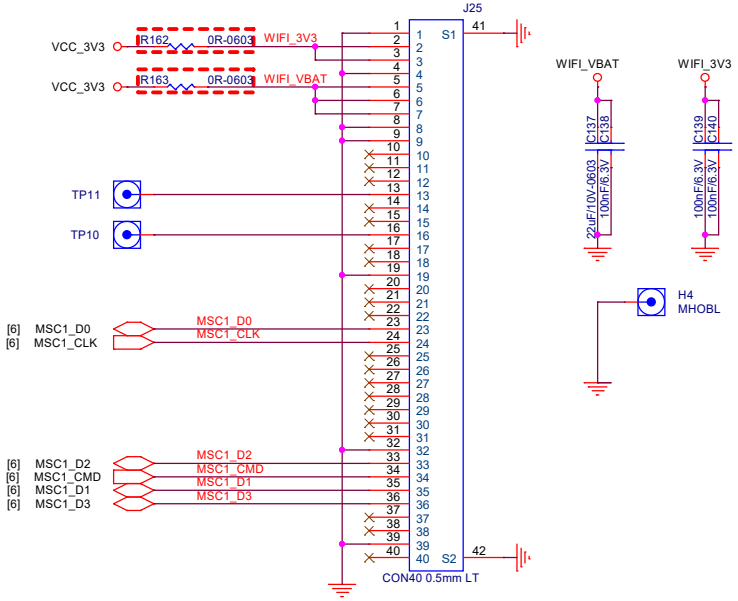

<Core Design>

INGENIC SEMICONDUCTOR CO.,LTD

Title	RD_T23_PIKE	
Size A3	Page Name SD_AUDIO_WIFI	Rev V1.1
Date: Wednesday, March 06, 2024	Sheet 8 of 13	

AF-MOTOR_USB

Note: The 0Ω-0603 resistance in [ ] is used for measuring power consumption and can be removed in the product board.

USB2.0

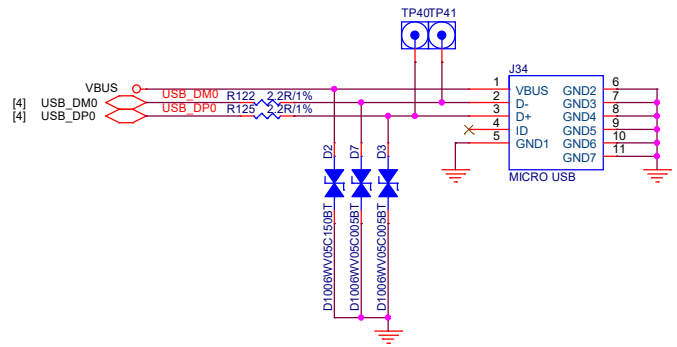

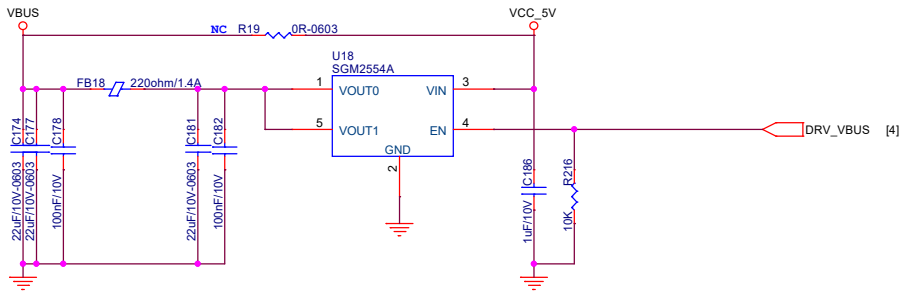

SPI AF MOTOR

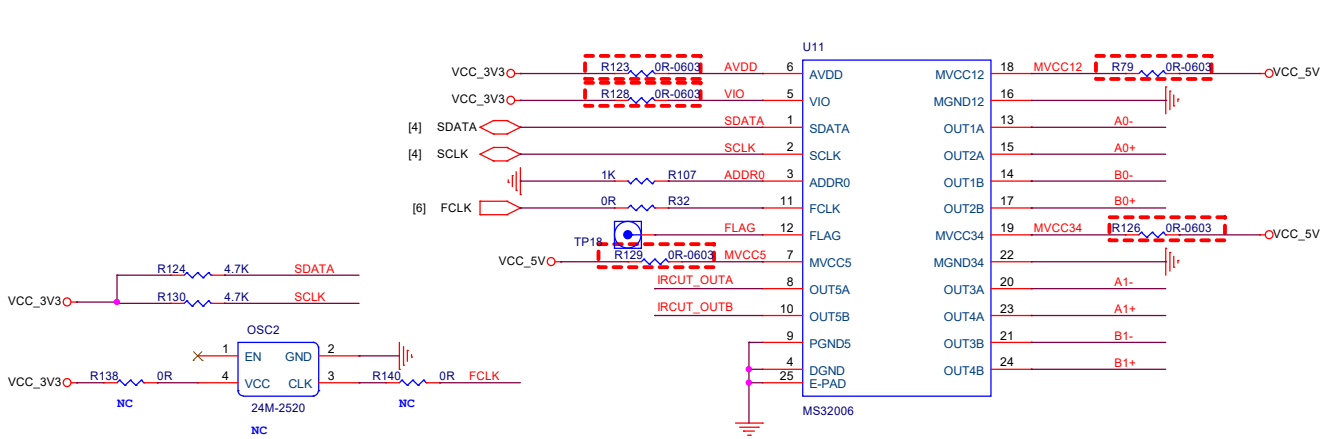

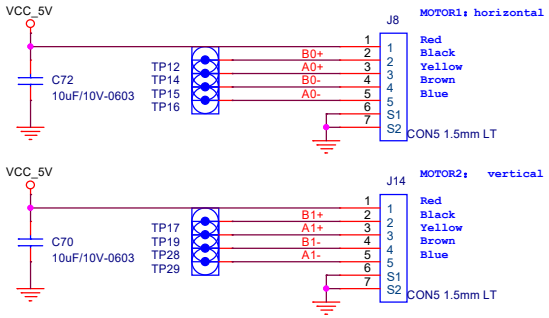

Note: Pin to pin with MS32007,R32 can be NC.
Also Can use Micro-steps Mode motor driver(e.g. TMI8153) to reduce power consumption and motor rotation noise.

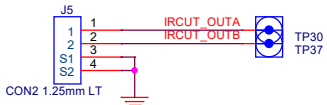

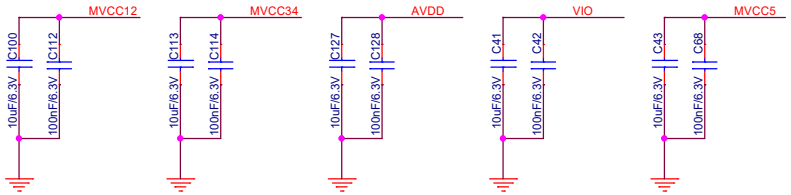

<Core Design>

INGENIC SEMICONDUCTOR CO.,LTD		
Title: RD_T23_PIKE		
Size: A3	Page Name: AF-MOTOR_USB	Rev: V1.1
Date: Wednesday, March 06, 2024	Sheet 9 of 13	

BOOT_RST_DEBUG_EFUSE_LED

BOOT CONFIGURATION

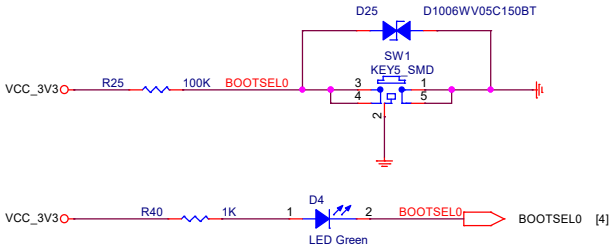

SW1:(ON=0,OFF=1)

BOOT_SEL0	BOOT FROM
0	SD card : MSC0
1	SFC : SPI0/SSI_CE0

DEBUG

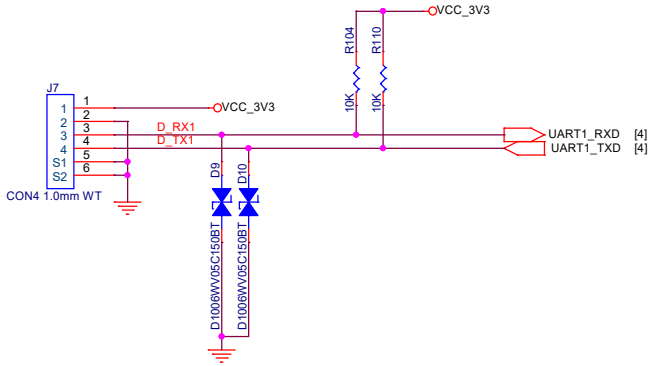

EFUSE

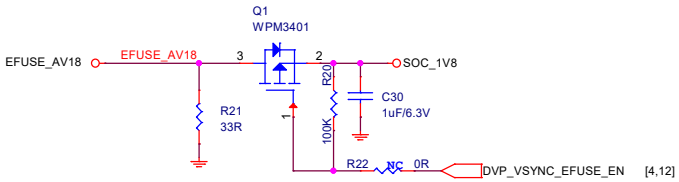

RESET CIRCUITS

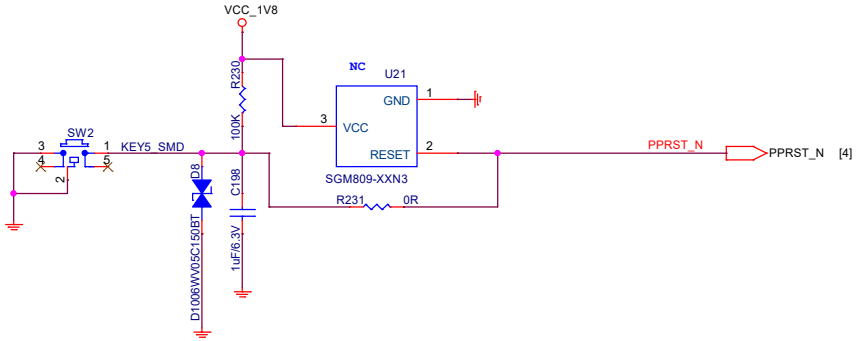

LED

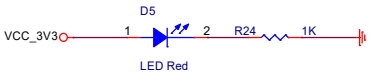

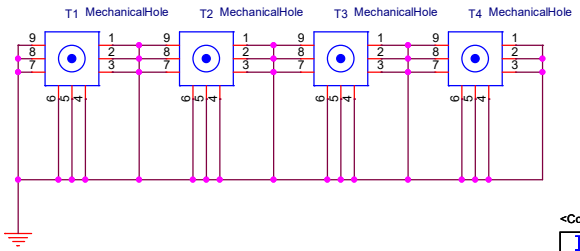

<Core Design>

INGENIC SEMICONDUCTOR CO.,LTD		
Title: RD_T23_PIKE		
Size: A3	Page Name: BOOT_RST_DEBUG_EFUSE_LED	Rev: V1.1
Date: Wednesday, March 06, 2024	Sheet 10 of 13	

SLCD

Note: The 0Ω-0603 resistance in [ ] is used for measuring power consumption and can be removed in the product board.

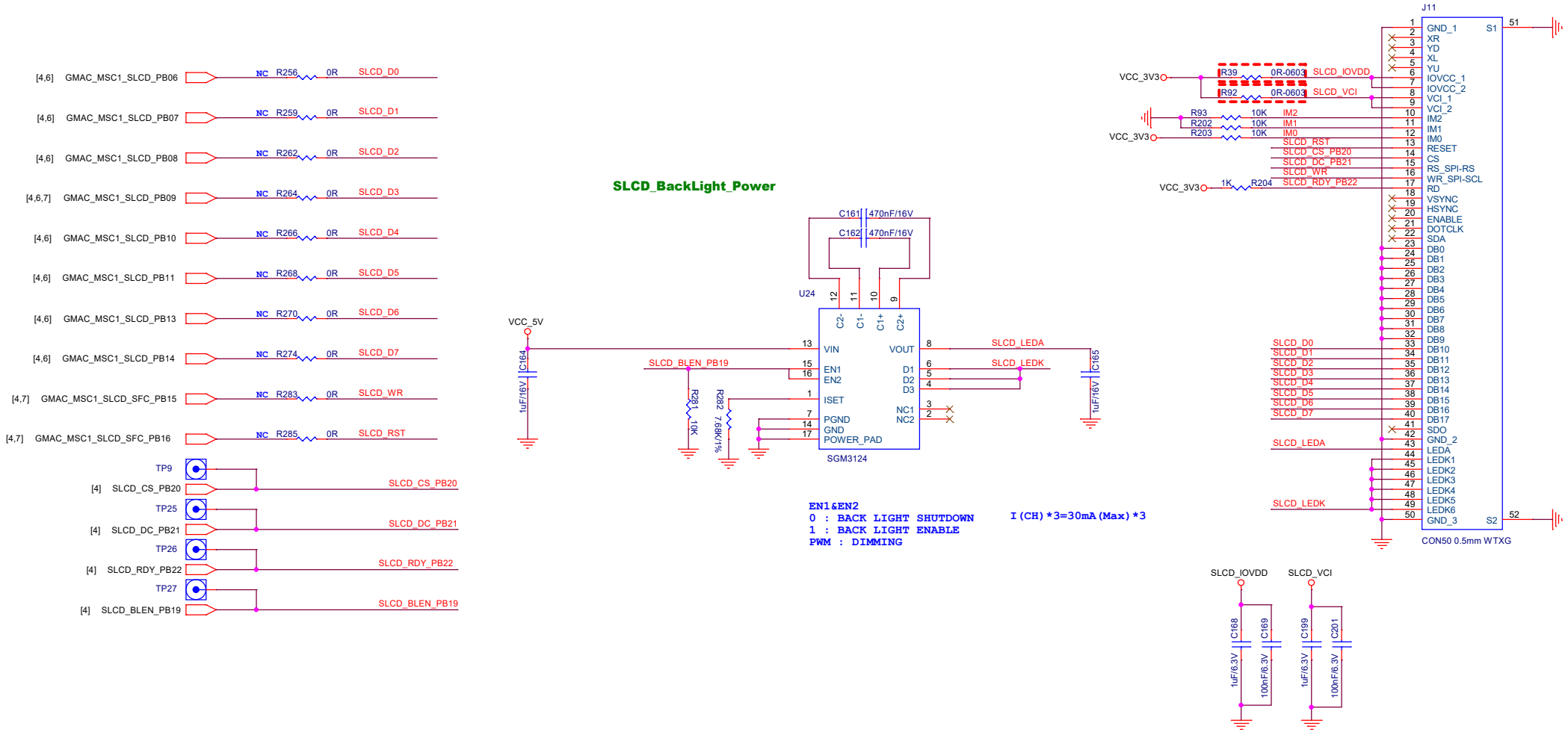

<Core Design>

INGENIC SEMICONDUCTOR CO.,LTD		
Title: RD_T23_PIKE		
Size: A3	Page Name: SLCD	Rev: V1.1
Date: Wednesday, March 06, 2024	Sheet 11 of 13	

DVP_MIPI SWITCH

Note: The 0Ω-0603 resistance in [ ] is used for measuring power consumption and can be removed in the product board.

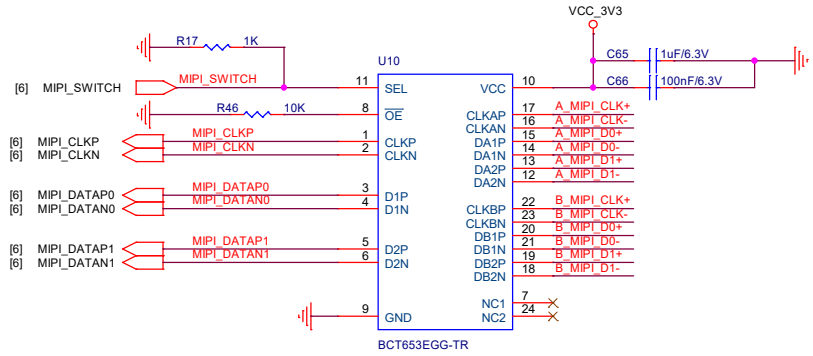

MIPI

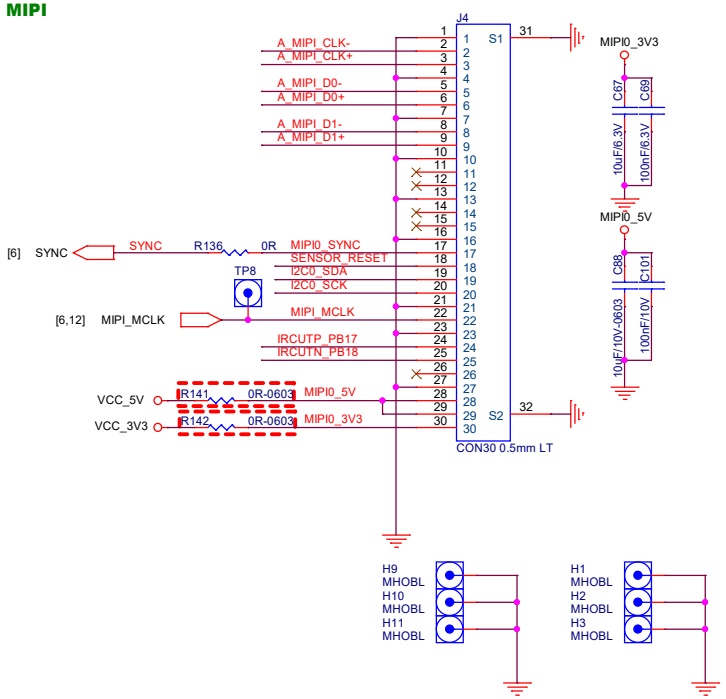

DVP

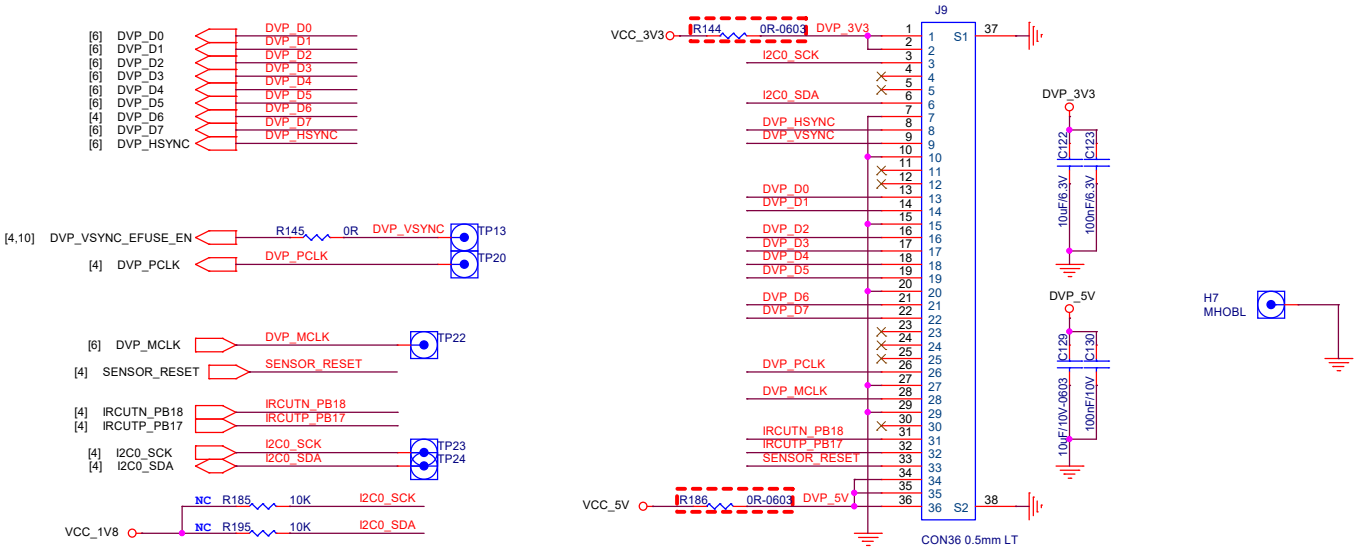

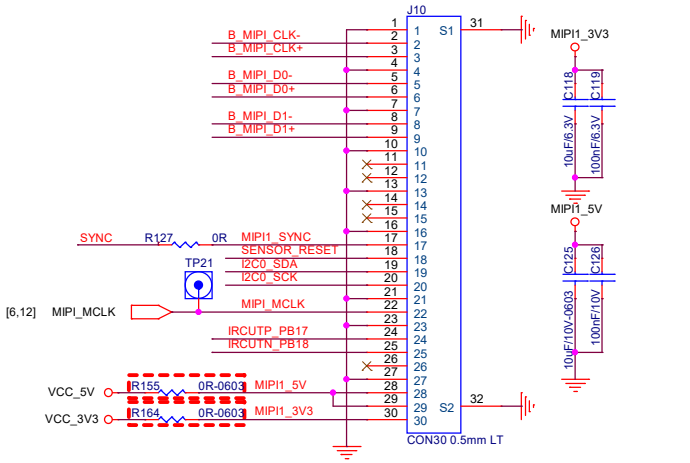

<Core Design>

INGENIC SEMICONDUCTOR CO.,LTD		
Title: RD_T23_PIKE		
Size: A3	Page Name: DVP_MIPI SWITCH	Rev: V1.1
Date: Wednesday, March 06, 2024	Sheet 12 of 13	

Date	Revision	Change
May 05 2023	Rev1.0	1. First Revision
Nov 08 2023	Rev1.1	1. Correct the power supply feedback resistance and description 2.Change the SD to power on card insertion 3.Change motor connectors 4.Adjust DVP data alignment 5.Correct the IRCUT connection 6.Add IRCUT connectors from MS32006 7.Change U6 to LDO

<Core Design>

INGENIC SEMICONDUCTOR CO.,LTD

Title		
	RD_T23_PIKE	
Size: A3	Page Name: REVISION HISTORY	Rev: V1.1
Date: Wednesday, March 06, 2024	Sheet 13 of 13	