T23N

Smart Video Application Processor

Data Sheet

Version 1.0

Date 2023-04-23

Confidential for 先智电子

北京君正集成电路股份有限公司

Ingenic Semiconductor Co.,Ltd.

Copyright © 2005-2023Ingenic Semiconductor Co. Ltd. All rights reserved.

No part of this document may be reproduced or transmitted in any form or by any means without prior written consent of Ingenic Semiconductor Co. Ltd.

Trademarks and Permissions

君正 Ingenic 、Ingenic and Ingenic icons are trademarks of Ingenic Semiconductor Co. Ltd.
All other trademarks and trade names mentioned in this document are the property of their respective holders.

Disclaimer

All the deliverables and data in this folder serve only as a reference for customer development. Please read through this disclaimer carefully before you use the deliverables and data in this folder. You may use the deliverables in this folder or not. However, by using the deliverables and data in this folder, you agree to accept all the content in this disclaimer unconditional and irrevocable. If you do not find the content in this disclaimer reasonable, you shall not use the deliverables and data in this folder.
The deliverables and data in this folder are provided "AS IS" without representations, guarantees or warranties of any kind (either express or implied). To the maximum extent permitted by law, Ingenic Semiconductor Co., Ltd (Ingenic) provides the deliverables and data in this folder without implied representations, guarantees or warranties, including but not limited to implied representations, guarantees and warranties of merchantability, non-infringement, or fitness for a particular purpose. Deviation of the data provided in this folder may exist under different test environments.
Ingenic takes no liability or legal responsibility for any design and development error, incident, negligence, infringement, and loss (including but not limited to any direct, indirect, consequential, or incidental loss) caused by the use of data in this folder. Users shall be responsible for all risks and consequences caused by the use of data in this folder.

Ingenic Semiconductor Co., Ltd.

Address： **Ingenic Headquarters, East Bldg. 14, Courtyard #10,**

XIbeiwang East Road, Haidian District, Beijing 100193, China

Tel： **(86-10)56345000**

Fax： **(86-10)56345001**

Website： **http: //www.ingenic.com**

Confidential for 先智电子

Contents

Contents 1

Preface i

1 Overview 1

1.1 Product Description 1

1.2 Application Scenarios 2

2 Features 3

2.1 CPU 3

2.2 MCU 3

2.3 Video Processor Unit 3

2.4 Image Signal Processor 3

2.5 2D Graphics Engine 4

2.6 Display Process Controller 4

2.7 Video Input 4

2.8 Audio System 5

2.9 Memory 5

2.10 System Functions 5

2.11 Peripherals 6

2.12 Boot 7

2.13 Security Engine 7

2.14 Physical Specifications 7

3 Characteristic 8

4 Package and Pinout 9

4.1 Overview 9

4.2 Solder Process 9

4.3 Moisture Sensitivity Level 9

Confidential for 先智电子

Copyright© 2005-2023Ingenic Semiconductor Co., Ltd. All rights reserved.

4.4 T23N Package 9

5 Pin Description 12

5.1 GPIO Group A 12

5.2 GPIO Group B 12

5.3 GPIO Group C 13

5.4 T23N Analog PAD DESCRIPTION 13

5.5 T23N Digital PAD DESCRIPTION 15

5.6 The Ball Assignment of T23N 16

6 Electrical Specifications 18

6.1 Power Consumption Parameters 18

6.2 Recommended Operating Conditions 18

6.2.1 Power Domain VDDIO0 DC Characteristics 19

6.2.2 Power Domain VDDIO1 DC Characteristics 19

6.3 Audio Codec 20

6.3.1 Analog Interface Description 20

6.4 USB 2.0 PHY 21

6.4.1 DC/AC Specifications 21

6.5 Power On, Reset and BOOT 22

6.5.1 Power-On Sequence 22

6.5.2 Reset procedure 23

6.5.3 BOOT 24

7 Thermal Characteristics 27

7.1 Temperature and Thermal Resistance Parameters 27

8 Interface Timings 28

8.1 SFC Interface Timings 28

8.1.1 Propagation Delay 28

8.1.2 AC Timing 28

8.2 Ethernet MAC Port Timings 29

8.2.1 RMII Timings 29

8.2.2 MDIO Interface Timings 30

8.3 VI Interface Timing 31

8.3.1 BT Timings 31

8.3.2 MIPI-CSI Timings 31

8.4 SMB Interface Timing 32

Confidential for 先智电子

Copyright© 2005-2023Ingenic Semiconductor Co., Ltd. All rights reserved.

8.5 SSI Timings 32

8.6 SDIO/MMC(MSC) Interface Timings 33

Confidential for 先智电子

Copyright© 2005-2023Ingenic
Semiconductor Co., Ltd. All rights reserved.

Preface

Purpose

This document describes the structures, main features, performance, functions and related address map of each module of T23N, it also embraced hardware characteristics such as package, pin usages, electrical specifications, interface timing and so on.

Related Version

The following table lists the product version related to this document.

Product Name	Version
T23N	V1.0

Symbol Conventions

The symbols that may be found in this document are defined as follows.

Symbol	Description
CAUTION	Indicates a potentially dangerous situation.If it occurs, it may cause chip damage, data loss, performance impact, etc.
NOTE	Interpretation and supplementation of information in the main text.

General Conventions

The general conventions that may be found in this document are defined as follows.

Convention	Description
Times New Roman	Normal paragraphs are in Times New Roman.

Confidential for 先智电子

Copyright© 2005-2023Ingenic Semiconductor Co., Ltd. All rights reserved.

Convention	Description
Boldface	Names of files, directories, folders, and users are in **boldface**.
Italic	Book titles are in *italics*.

Table Content Conventions

The table content conventions that may be found in this document are defined as follows.

Content	Description
-	The cell is blank.
TBD	The value is to be determined.

Numerical System

The expressions of data capacity, frequency, and data rate are described as follows.

Type	Symbol	Value
Data capacity (such as the RAM capacity)	K	1024
	M	1,048,576
	G	1,073,741,824
Frequency, data rate	k	1000
	M	1,000,000
	G	1,000,000,000

The expressions of addresses and data are described as follows.

Symbol	Example	Description
0x	0xFE04、0x18	Address or data in hexadecimal
0b	0b000、0b00 00000000	Data or sequence in binary (register description is excluded.)
X	00X, 1XX	In data expression, X indicates 0 or 1. For example, 00X indicates 000 or 001 and 1XX indicates 100, 101, 110, or 111.

Confidential for 先智电子

Copyright© 2005-2023Ingenic Semiconductor Co., Ltd. All rights reserved.

Change History

The latest document version contains all changes made in previous versions.

Revision Date	Version	Description
2023-04-23	V1.0	This version is the first draft release.

Confidential for 先智电子

Copyright© 2005-2023Ingenic Semiconductor Co., Ltd. All rights reserved.

1 Overview

1.1 Product Description

Figure1- 1Application block diagram of the T23N

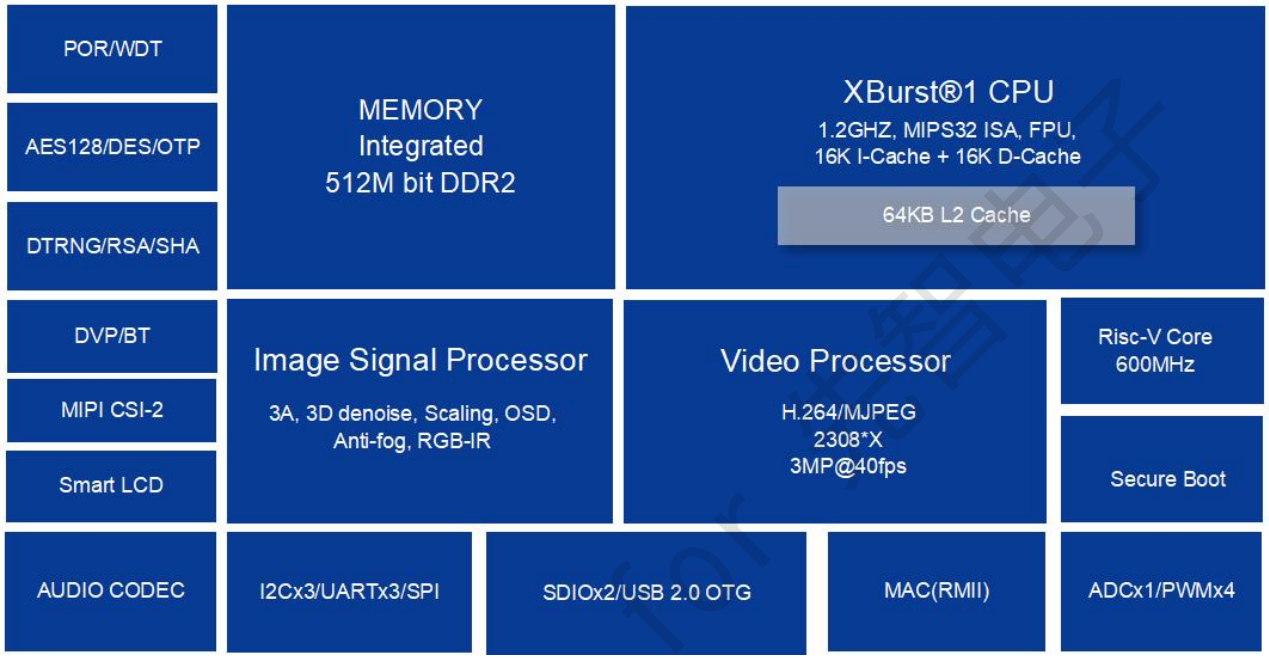

T23N is a smart video application processor targeting for video devices like mobile camera, security survey, video talking, video analysis and so on. This SOC introduces a kind of innovative architecture to fulfill both high performance computing and high quality image and video encoding requirements addressed by video devices. T23N provides high-speed CPU computing power, excellent image signal process, fluent 2308x2048 resolution video recording.

The CPU (Central Processing Unit) core, equipped with 16kB instruction and 16kB data L1 cache, and 64kB L2 cache, operating at 1.2GHz, and full feature MMU function performs OS related tasks. At the heart of the CPU core is XBurst® processor engine. XBurst® is an industry leading microprocessor core which delivers superior high performance and best-in-class low power consumption. A hardware floating-point unit which compatible with IEEE754 is also included.

The VPU (Video Processing Unit) core is a video encoder engine designed to process video streams using the AVC (ISO/IEC 14496-10 Advanced Video Coding) standards. It also supports still picture encoding using the JPEG standard (ITU T.81). Together with the on chip video accelerating engine and post image processing unit, T23N delivers high video performance. The maximum resolution of 2308x2048 in the format of AVC is supported in encoding, up to 3MP@40fps.

The ISP (Image signal processor) core supports excellent image process with the image from raw sensors. It supports DVP,BT and MIPI interface. With the functions, such as 3A, 2D and 3D denoise, lens shading, it can

Confidential for 君智电子

Copyright© 2005-2023Ingenic Semiconductor Co., Ltd. All rights reserved.

supply maximum resolution 2308x2048 resolution image for a view or encoding to store or transfer.

For more quickly and easily to use T23N, 512M bit DDR2 is integrated on chip.

On-chip modules such as audio CODEC, multi-channel SAR-ADC controller and camera interface offer designers an economical suite of peripherals for video application.WLAN, Bluetooth and expansion options are supported through high-speed SPI and MMC/SD/SDIO host controllers. Other peripherals such as USB OTG, MAC, UART and SPI as well as general system resources provide enough computing and connectivity capability for many applications.

1.2 Application Scenarios

Figure 1-2 shows the typical application scenario of the T23N.

Figure1- 2The typical application scenario of the T23N

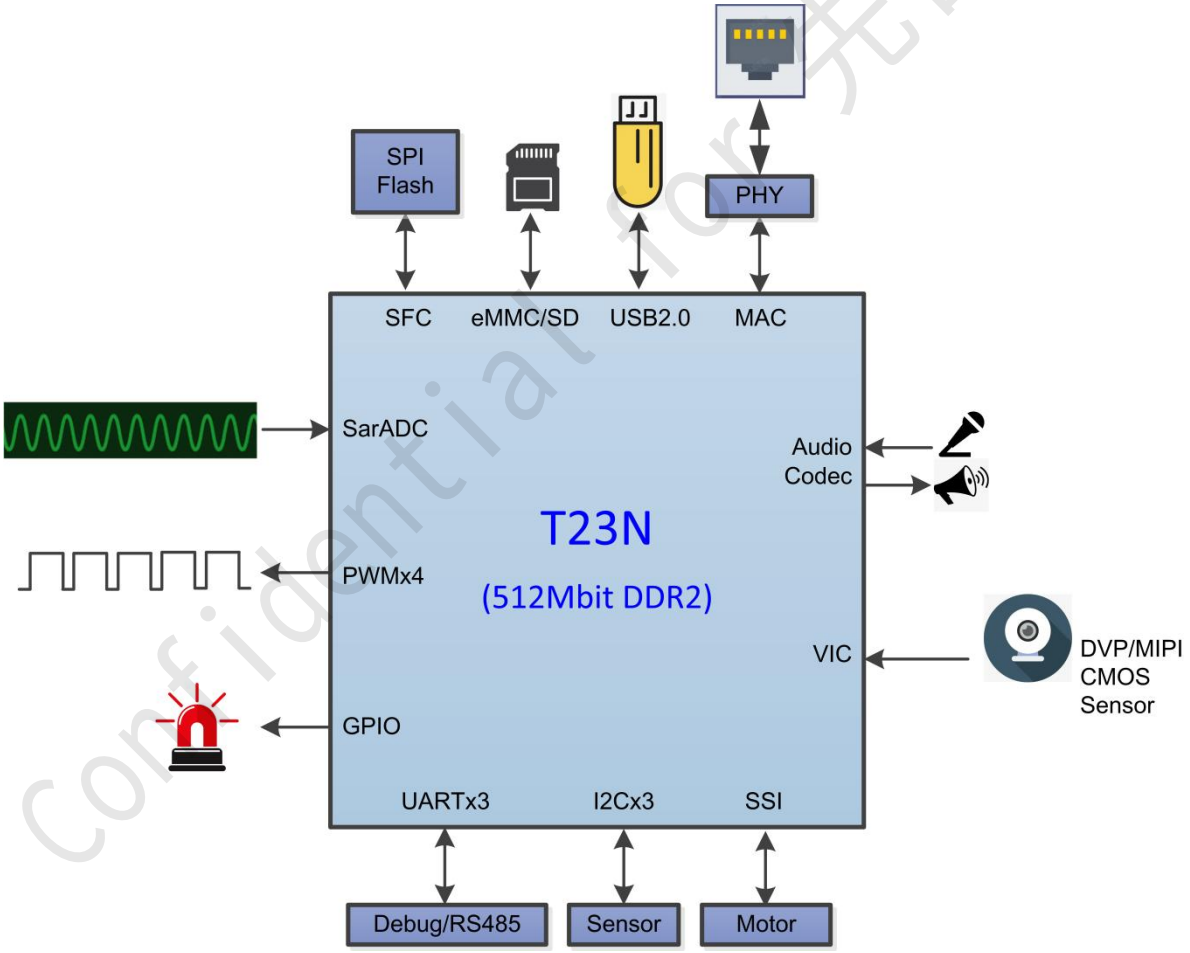

Confidential for 先智电子

Copyright© 2005-2023Ingenic Semiconductor Co., Ltd. All rights reserved.

2 Features

2.1 CPU

- XBurst®-1 core
  - XBurst® FPU instruction set supporting both single and double floating point format which are IEEE754 compatible
  - XBurst® 9-stage pipeline micro-architecture, the operating frequency is 1.2GHz
- MMU
  - 32-entry joint -TLB
  - 8 entry instruction TLB
  - 8 entry data TLB
- L1 Cache
  - 16kB instruction cache
  - 16kB data cache
- Hardware debug not support
- 16kB tight coupled memory
- L2 Cache
  - 64kB unify cache

2.2 MCU

- 600Mhz RISC-V coprocessor
- 32bit, in-order,3-stage pipeline
- RV32IMC instruction set architecture
- 8KB IRAM and 8KB DRAM

2.3 Video Processor Unit

- H264 Encoder(I/P slices)
- H264 baseline main high profile encoding up to
- 50M bit/s, 3MP@40fps
- H264 maximum size up to 2308x* resolution
- JPEG compressing/decompressing up to
- 100Mega-pixels per second(baseline)

2.4 Image Signal Processor

- Max 12bit Bayer data input, YUV422 8bit input
- Max in/out image size 2308x2048

Confidential for 先智电子

Copyright© 2005-2023Ingenic Semiconductor Co., Ltd. All rights reserved.

- Min input size 512x256
- Min output size 128x128
- Maximum performance 3M@30fps
- Defog, Scaler, Sharpen
- Auto Focus
- Auto Exposure
- Auto White Balance
- Auto Dynamic Range
- BLC, LSC, DPC
- Demosaic Processing
- Purple Edge Correction
- Horizontal Lens Distortion Correction
- Time Domain / Space Domain Denoising
- 3A Statistical Information Output
- 3 Different Resolution Outputs At The Same Time

2.5 2D Graphics Engine

- IPU
  - Input data format: NV12
  - Output data format: ARGB/RGB32/NV12/NV21/HSV
  - Support 4 layers OSD

2.6 Display Process Controller

- Received format: RGB888, RGB565, RGB555, NV12, NV21
- Support maximum input and output resolution 800x800
- Support display output 800x600@60Hz,24BPP
- Support up to 16,777,216(16M) colors

2.7 Video Input

- 8/10/12 bits RGB bayer format
- Maximum resolution up to2308x2048
- Maximum performance 3M@30fps
- DVP, BT1120(serial mode)/BT656/BT601 and MIPI CSI(2 lane up to 1.5Gbps)
- Single-sensor input

Confidential for 先智电子

Copyright© 2005-2023Ingenic Semiconductor Co., Ltd. All rights reserved.

2.8 Audio System

- Audio Codec
  - 24 bits DAC with 92dB SNR
  - 24 bits ADC with 90dB SNR
  - Programmable input and output analog gains
  - Digital interpolation and decimation filter integrated
  - Sampling rate of 8KHz/12KHz/16KHz/24KHz/32KHz/44.1KHz/48KHz/96KHz
  - Support 16 to 32Ω headphone output or line output
  - Low power: 2mA for mono playback, 3mA for stereo recording, less than 0.05mA for standby
  - Support differential and single-ended microphone or line input
  - Automatic Level Control(ALC) for smooth audio recording
  - 1.8V supply for analog and 0.8V supply for digital

2.9 Memory

- Integrated 512M bit DDR2 on chip
- Static memory interfaces

2.10 System Functions

- Clock
  - On-Chip 5MHz~200MHz oscillator circuit, 24MHz oscillator circuit is recommended
  - Two phase-locked loops(PLL) with programmable multiplier
  - Functional-unit clock gating
- Timer and counter unit with PWM output
  - Provide four separate channels and only one mode
  - Every channel has PWM output
- OS timer controller
  - 64-bit counter and 32-bit compare register
  - Support interrupt generation when the counter matches the compare register
  - Two clock sources: RTCLK (real time clock), HCLK (system bus clock) selected with 1, 4, 16, 64, 256 and 1024 clock dividing selected
- Interrupt controller
  - Total 64 interrupt sources
  - Each interrupt source can be independently enabled
  - Priority mechanism to indicate highest priority interrupt
  - All the registers are accessed by CPU

Confidential for 先智电子

Copyright© 2005-2023Ingenic Semiconductor Co., Ltd. All rights reserved.

- Watchdog timer
  - Generates WDT reset
- PDMA
  - Support up to 32 independent DMA channels
  - Descriptor or No-Descriptor Transfer mode compatible with previous JZ SOC
  - Peripherals related to data transmission
- SPI Flash Controller
  - Support SPI protocol : Standard, Dual, Quad SPI
  - Configurable sampling point for reception
  - Configurable flash address wide are supported
  - 7 transfer formats: Standard SPI, Dual-Output/Dual-Input SPI, Quad-Output/Quad-Input SPI, Dual-I/O SPI, Quad-I/O SPI, Full Dual-I/O SPI, Full Quad-I/O SPI
  - Two data transfer mode: slave mode and DMA mode
- EFUSE
  - 1024 bits internal nonvolatile one-time programmable EFUSE storage
  - 320 bits reserved for users
  - Segmented management with protection bits
  - Two reading methods: register reading or AHB mapping reading
  - Configurable programming and reading timing

2.11 Peripherals

- General-Purpose I/O ports
  - Each port can be configured as an input, an output or an alternate function port
  - Each port can be configured as an interrupt source of low/high level or rising/falling edge triggering, and every interrupt source can be masked independently
  - Each port has an internal pull-up and pull-down resistor connected. The pull-up/down resistor can be disabled
- SMB Controller
  - Two-wire SMB serial interface – consists of a serial data line (SDA) and a serial clock line (SCL)
  - Two speeds: Standard mode (100 Kb/s); Fast mode (400 Kb/s)
- SSI
  - 3 protocols: National's Microwire, TI's SSP, and Motorola's SPI
  - Programmable bit clock frequency between 7.2KHz to 50MHz
- UART

Confidential for 先智电子

Copyright© 2005-2023Ingenic Semiconductor Co., Ltd. All rights reserved.

- Full-duplex operation
- 5-, 6-, 7- or 8-bit characters with optional no parity or even or odd parity and with 1, 1½, or 2 stop bits
- 64x8 bit transmit FIFO and 64x11bit receive FIFO
- Independently controlled transmit, receive (data ready or timeout), line status interrupts
- Internal diagnostic capability Loop back control and break, parity, overrun and framing-error is provided
- Separate DMA requests for transmit and receive data services in FIFO mode
- Supports modem flow control by software or hardware
- Slow infrared asynchronous interface that conforms to IrDA specification

● MSC Controller

- Fully compatible with the MMC System Specification version 4.2
- Support SD Specification 3.0 and SD I/O Specification 1.0 with 1 command channel and 4 data channels
- Consumer Electronics Advanced Transport Architecture (CE-ATA – version 1.1)

● USB Interface

- Complies with the USB 2.0 standard for high-speed (480Mbps) functions and with the On-The-Go supplement to the USB 2.0 specification

● SAR A/D Interface

- 1 Channel
- 10 bit resolution
- Integral nonlinearity: ±2 LSB
- Differential nonlinearity: ±2 LSB
- Resolution/speed: up to 1Msps
- Max Clock Frequency: 13MHz

2.12 Boot

- SPL
- Startup methods including MSC, SFC NOR/NAND and USB boot
- An internal 16KB bootrom

2.13 Security Engine

- AES, DES , RSA and HASH algorithms implemented by hardware
- Digital True Random Number Generate

2.14 Physical Specifications

- Power

- TBD

Confidential for 先智电子

Copyright© 2005-2023Ingenic Semiconductor Co., Ltd. All rights reserved.

3 Characteristic

Item	Characteristic
Power supply voltage	General purpose I/O: 1.8V or 3.3V DDR I/O: 1.8V(DDR2) EFUSE programming: 1.8V ± 5% Analog power supply 1: 1.8V Analog power supply 2: 3.3V Core: 0.8V
Package	QFN88, 9X9mm, 0.35pitch
Operating frequency	1.0GHz~1.2GHz

Confidential for 先智电子

Copyright© 2005-2023Ingenic Semiconductor Co., Ltd. All rights reserved.

4 Package and Pinout

4.1 Overview

T23N processor is offered in QFN88, shown inFigure4-1~Figure4-3. The T23N pin to ball assignment is show in Figure5-1.

4.2 Solder Process

T23N package is lead-free. It's reflow profile follows the IPC/JEDEC lead-free reflow profile as contained in J-STD-020C.

4.3 Moisture Sensitivity Level

T23N package moisture sensitivity is level 3.

4.4 T23N Package

Figure4-1Top View

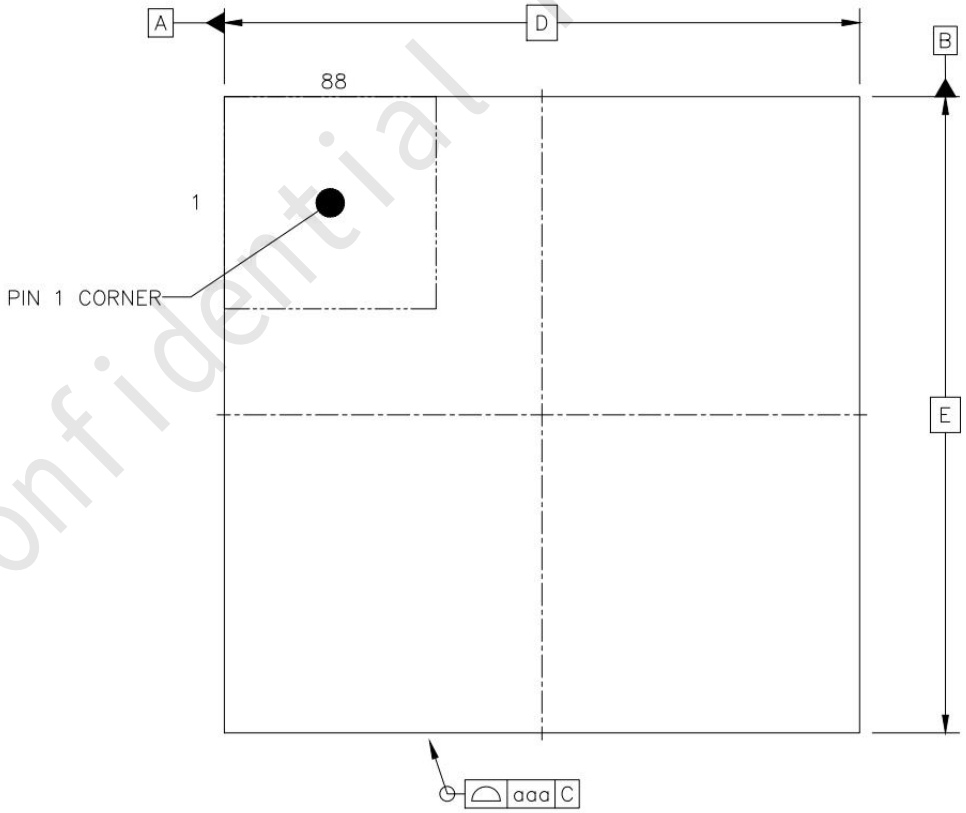

Confidential for 先智电子

Copyright© 2005-2023Ingenic Semiconductor Co., Ltd. All rights reserved.

Figure4-2 Bottom View

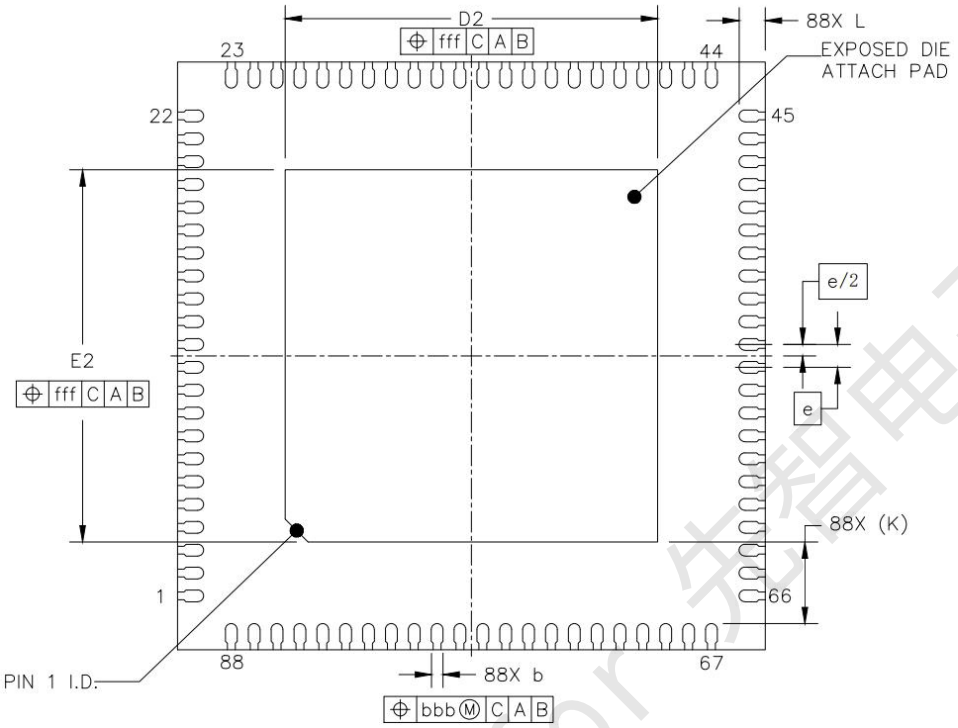

Figure4-3 Side View

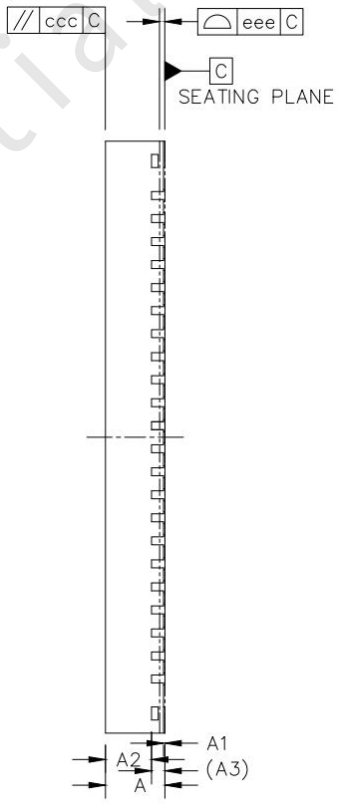

Confidential for 先智电子

Copyright© 2005-2023Ingenic Semiconductor Co., Ltd. All rights reserved.

Table4-1 Package dimensions

		SYMBOL	MIN	NOM	MAX
TOTAL THICKNESS		A	0.85	0.9	0.95
STAND OFF		A1	0	0.02	0.05
MOLD THICKNESS		A2	---	0.7	---
L/F THICKNESS		A3	0.203 REF		
LEAD WIDTH		b	0.13	0.18	0.23
BODY SIZE	X	D	9 BSC		
	Y	E	9 BSC		
LEAD PITCH		e	0.35 BSC		
EP SIZE	X	D2	5.6	5.7	5.8
	Y	E2	5.6	5.7	5.8
LEAD LENGTH		L	0.3	0.4	0.5
LEAD TIP TO EXPOSED PAD EDGE		K	1.25 REF		
PACKAGE EDGE TOLERANCE		aaa	0.1		
MOLD FLATNESS		ccc	0.1		
COPLANARITY		eee	0.08		
LEAD OFFSET		bbb	0.07		
EXPOSED PAD OFFSET		fff	0.1		

NOTE

1. REFER TO JEDEC MO-220;
2. COPLANARITY APPLIES TO LEADS, CORNER LEADS AND DIE ATTACH PAD;
3. BAN TO USE THE LEVEL 1 ENVIRONMENT-RELATED SUBSTANCES;
4. FINISH: Cu/EP · Sn8~20s

Confidential for 先锋电子

Copyright© 2005-2023Ingenic Semiconductor Co., Ltd. All rights reserved.

5 Pin Description

5.1 GPIO Group A

Ball No.	Ball Name	Pull	def driven	Func0	Func1	Func2	Func3	Power
23	DVP_D6_UART1_TXD_MSC1_D1_PA06	Z	4mA		DVP_D6	UART2_TxD	MSC1_D1	VDDIO0
22	DVP_D7_MIPI_SEL_UART1_RXD_MSC1_D2_PA07	Z	4mA	MIPI_SEL	DVP_D7	UART2_RxD	MSC1_D2	VDDIO0
13	SMB0_SDA_PA12	Pullup	4mA		SMB0_SDA			VDDIO0
12	SMB0_SCK_PA13	Pullup	4mA		SMB0_SCK			VDDIO0
17	DVP_PCLK_PWM0_MSC1_CLK_PA14	Z	4mA		DVP_PCLK	PWM0	MSC1_CLK	VDDIO0
16	DVP_MCLK_PA15	Z	8mA		DVP_MCLK			VDDIO0
15	DVP_HSYNC_SMB1_SDA_MSC1_D0_PA16	Z	4mA		DVP_HSYNC	SMB1_SDA	MSC1_D0	VDDIO0
14	DVP_VSYNC_SMB1_SCK_MSC1_CMD_PA17	Z	4mA		DVP_VSYNC	SMB1_SCK	MSC1_CMD	VDDIO0
11	MSC1_D3_PA18	Z	4mA				MSC1_D3	VDDIO0
47	SFC_DT_PA23	Pullup	8mA		SFC_DT			VDDIO1
46	SFC_DR_PA24	Pullup	8mA		SFC_DR			VDDIO1
48	SFC_CLK_PA27	Pullup	8mA		SFC_CLK			VDDIO1
45	SFC_CE0_PA28	Pullup	8mA		SFC_CE0			VDDIO1

5.2 GPIO Group B

Ball No.	Ball Name	Pull	def driven	Func0	Func1	Func2	Func3	Power
50	MSC0_D0_PB00	Z	4mA	MSC0_D0				VDDIO1
49	MSC0_D1_PB01	Z	4mA	MSC0_D1				VDDIO1
54	MSC0_D2_PB02	Z	4mA	MSC0_D2				VDDIO1
53	MSC0_D3_PB03	Z	4mA	MSC0_D3				VDDIO1
51	MSC0_CLK_PB04	Z	8mA	MSC0_CLK				VDDIO1
52	MSC0_CMD_PB05	Z	4mA	MSC0_CMD				VDDIO1
62	GMAC_TXCLK_SLCD_D0_PB06	Z	4mA	GMAC_TXCLK			SLCD_D0	VDDIO1
63	GMAC_PHY_CLK_SLCD_D1_PB07	Z	8mA	GMAC_PHY_CLK			SLCD_D1	VDDIO1
66	GMAC_TXEN_MSC1_CLK_SLCD_D2_PB08	Z	4mA	GMAC_TXEN	MSC1_CLK		SLCD_D2	VDDIO1
59	GMAC_RXDV_MSC1_CMD_SLCD_D3_PB09	Z	4mA	GMAC_RXDV	MSC1_CMD		SLCD_D3	VDDIO1
58	GMAC_MDCK_MSC1_D0_SLCD_D4_PB10	Z	4mA	GMAC_MDCK	MSC1_D0		SLCD_D4	VDDIO1
57	GMAC_MDIO_MSC1_D1_SLCD_D5_PB11	Z	4mA	GMAC_MDIO	MSC1_D1		SLCD_D5	VDDIO1
64	GMAC_TXD0_MSC1_D2_SLCD_D6_PB13	Z	4mA	GMAC_TXD0	MSC1_D2		SLCD_D6	VDDIO1
65	GMAC_TXD1_MSC1_D3_SLCD_D7_PB14	Z	4mA	GMAC_TXD1	MSC1_D3		SLCD_D7	VDDIO1
60	GMAC_RXD0_SSI0_CLK_SFC_CE1_SLCD_WR_PB15	Pullup	8mA	GMAC_RXD0	SSI0_CLK	SFC_CE1	SLCD_WR	VDDIO1
61	GMAC_RXD1_SSI0_CE0_SFC_GPC_SLCD_TE_PB16	Pullup	8mA	GMAC_RXD1	SSI0_CE0	SFC_GPC	SLCD_TE	VDDIO1
1	PWM0_SSI0_DT_UART2_TXD_PB17	Z	4mA	PWM0	SSI0_DT	UART2_TxD		VDDIO1
2	PWM1_SSI0_DR_UART2_RXD_PB18	Z	4mA	PWM1	SSI0_DR	UART2_RxD		VDDIO1
71	UART0_RXD_PB19	Z	4mA	UART0_RxD				VDDIO1
69	UART0_CTS_SMB2_SDA_SLCD_CS_PB20	Z	4mA	UART0_CTS		SMB2_SDA	SLCD_CS	VDDIO1

confidential for 先锋电子

Copyright© 2005-2023Ingenic Semiconductor Co., Ltd. All rights reserved.

Ball No.	Ball Name	Pull	def driven	Func0	Func1	Func2	Func3	Power
68	UART0_RTS_SMB2_SCK_SLCD_DC_PB21	Z	4mA	UART0_RTS		SMB2_SCK	SLCD_DC	VDDIO1
70	UART0_TXD_SLCD_RDY_PB22	Z	4mA	UART0_TxD	MIPI_SEL		SLCD_RDY	VDDIO1
74	UART1_TXD_PB23	Pullup	4mA	UART1_TxD				VDDIO1
73	UART1_RXD_PB24	Pullup	4mA	UART1_RxD				VDDIO1
88	SMB1_SDA_UART2_CTS_PB25	Z	4mA	SMB1_SDA		UART2_CTS		VDDIO1
87	SMB1_SCK_UART2_RTS_PB26	Z	4mA	SMB1_SCK		UART2_RTS		VDDIO1
86	DRV_VBUS_PWM2_SSI0_DT_SMB2_SDA_PB27	Z	4mA	DRV_VBUS	PWM2	SSI0_DT	SMB2_SDA	VDDIO1
85	PWM3_SSI0_DR_SMB2_SCK_PB28	Z	4mA		PWM3	SSI0_DR	SMB2_SCK	VDDIO1
82	SSI0_CLK_PB29	Z	4mA			SSI0_CLK		VDDIO1
81	SSI0_CE0_PB30	Z	4mA	MIPI_SEL		SSI0_CE0		VDDIO1
80	GPIO_PB31	Pulldown	4mA					VDDIO1

5.3 GPIO Group C

Ball No.	Ball Name	Pull	def driven	Func0	Func1	Func2	Func3	Power
67	BOOT_SEL0_PC00	Pullup	4mA					VDDIO1

5.4 T23N Analog PIN DESCRIPTION

Ball No.	Pin Name	IO	Pin Description
OSC			
5	EXCLK_I	AI	External oscillator clock input or external 24MHz clock input
4	EXCLK_O	AO	External oscillator clock output
3	EXCLK_VDDIO	Power	Oscillator power supply, 1.8V
PLL			
6	PLL_VDDHV	Power	PLL analog supply power 1.8V
EFUSE			
8	EFUSE_AVD	Power	EFUSE programming power, 0V/1.8V
MEMORY			
79	DDR_PLLVCCA	Power	DDR PLL power supply for analog
78	DDR_PLLVCCD	Power	DDR PLL power supply for digital
77	DDR_VREF	Power	DDR reference voltage,
75	VDDMEM	Power	DDR POWER supply(1.8V for DDR2)
76	VDDMEM	Power	DDR POWER supply(1.8V for DDR2)
MIPI-CSI			
29	DVP_D0_MIPI_DATAP1	AIO	DVP_D0 : In TTL model is DVP input data bit 0 DATAP1: In MIPI model is data lane 1 serial signal
28	DVP_D1_MIPI_DATAN1	AIO	DVP_D1:In TTL model is DVP input data bit 1 DATAN1: In MIPI model is data lane 1 serial signal
27	DVP_D2_MIPI_CLKP	AIO	DVP_D2: In TTL model is DVP input data bit 2 CLKP: In MIPI model is clock lane serial signal

Confidential for 先智电子

Copyright© 2005-2023Ingenic Semiconductor Co., Ltd. All rights reserved.

Ball No.	Pin Name	IO	Pin Description
26	DVP_D3_MIPI_CLKN	AIO	DVP_D3: In TTL model is DVP input data bit 3 CLKN: In MIPI model is clock lane serial signal
25	DVP_D4_MIPI_DATAP0	AIO	DVP_D4: In TTL model is DVP input data bit 4 DATAP0: In MIPI model is data lane 0 serial signal
24	DVP_D5_MIPI_DATAN0	AIO	DVP_D5: In TTL model is DVP input data bit 5 DATAN0: In MIPI model is data lane 0 serial signal
31	MIPI18V	Power	MIPI CSI analog power, 1.8V
SADC			
34	SADC_AVDD	Power	1.8v supply
32	SADC_VIN0	AI	Analog input 0
33	SADC_VREFP	AI	Voltage reference input, 0.5* SADC_AVDD~0.99* SADC_AVDD
USB			
38	USB_AVD18	Power	This is the analog supply that is used to support 1.8V signaling. This supply has both integrated IO pads.
37	USB_AVD33	Power	This is the analog supply that is used to support 3.3V signaling. This supply has both integrated IO pads and associated ESD. The expectation is that this supply is unique to the USB PHY. The PHY provides two pins for this power supply, but they can often be bonded out to a single package pin if the parasitic are low enough to support the current draw.
35	USB0PN	AIO	USB2.0 negative data line
36	USB0PP	AIO	USB2.0 positive data line
AUDIO			
44	HPOUTL	AO	headphone output
41	MICLP	AI	left ADC channel input
42	VCM	AO	Reference voltage output
43	CODEC_AVDD	Power	1.8V analog supply
POWER/NC/GROUND			
10	VDD	Power	CORE digital power, 0.8V
30	VDD	Power	CORE digital power, 0.8V
39	VDD	Power	CORE digital power, 0.8V
72	VDD	Power	CORE digital power, 0.8V
83	VDD	Power	CORE digital power, 0.8V
55	VDD	Power	CORE digital power, 0.8V
9	VDDIO0	Power	IO digital power for DVP power domain, 1.8V
56	VDDIO1	Power	IO digital power for normal function Pad power domain, 1.8V/3.3V
84	VDDIO1	Power	IO digital power for normal function Pad power domain, 1.8V/3.3V
18	NC	AIO	Floating
19	NC	AIO	Floating
20	NC	AIO	Floating
21	NC	AIO	Floating
40	NC	AIO	Floating
89	E-PAD	Ground	Must connect to GND

Confidential for 东莞电子

Copyright© 2005-2023Ingenic Semiconductor Co., Ltd. All rights reserved.

5.5 T23N Digital PIN DESCRIPTION

Signal Name	In/Out/Bidirection	Description
SLCD		
SLCD_RDY	Input	Smart LCD work status
SLCD_CS	Output	Smart LCD chip select
SLCD_DC	Output	Smart LCD data/command select signal
SLCD_TE	Input	Smart LCD tearing effect signal
SLCD_WR	Output	Smart LCD write signal
SLCD_D<n>	Output	Smart LCD data output bit n
PWM		
PWM0	Output	PWM channel 0 output
PWM1	Output	PWM channel 1 output
PWM2	Output	PWM channel 2 output
PWM3	Output	PWM channel 3 output
DVP(DIGITAL PART)		
DVP_VSYNC	Input	DVP vertical sync
DVP_HSYNC	Input	DVP horizontal sync
DVP_MCLK	Output	DVP main clock output
DVP_PCLK	Input	Camera sensor pixel clock input
DVP_D6	Input	In TTL model is DVP input data bit 6
DVP_D7	Input	In TTL model is DVP input data bit 7
MSC		
MSC<n>_D3	Bidirection	MSC(MMC/SD) n data bit 3
MSC<n>_D2	Bidirection	MSC(MMC/SD) n data bit 2
MSC<n>_D1	Bidirection	MSC(MMC/SD) n data bit 1
MSC<n>_D0	Bidirection	MSC(MMC/SD) n data bit 0
MSC<n>_CMD	Bidirection	MSC(MMC/SD) n command
MSC<n>_CLK	Output	MSC(MMC/SD) n clock output
GMAC_RMII		
GMAC_TXEN	Output	Gmac transmitting enable
GMAC_TXD1	Output	Gmac transmit data bit 1
GMAC_TXD0	Output	Gmac transmit data bit 0
GMAC_PHY_CLK	Output	Gmacphy clock
GMAC_TXCLK	Input	Gmac transmitting clock
GMAC_RXD1	Input	Gmac receive data bit 1
GMAC_RXD0	Input	Gmac receive data bit 0
GMAC_RXDV	Input	Gmac receive data valid
GMAC_MDCK	Output	Gmac manage data clock
GMAC_MDIO	Bidirection	Gmac MDIO which is clocked by MDC
UART		
UART<n>_TXD	Output	UART n transmitting data

Confidential for 先智电子

Copyright© 2005-2023Ingenic Semiconductor Co., Ltd. All rights reserved.

Signal Name	In/Out/Bidirection	Description
UART<n>_RXD	Input	UART n receiving data
UART<n>_CTS	Input	UART Clear to send control
UART<n>_RTS	Output	UART Request to send control
SMB		
SMB<n>_SDA	Bidirection	SMB n serial data
SMB<n>_SCK	Bidirection	SMB n serial clock
SSI		
SSI0_DR	Input	SSI data input
SSI0_CLK	Output	SSI clock output
SSI0_CE0	Output	SSI chip enable 0
SSI0_DT	Output	SSI data output
SFC		
SFC_CLK	Output	High speed ssi clock
SFC_DT	Bidirection	High speed ssi transmit data
SFC_DR	Bidirection	High speed ssi receive data
SFC_CE0	Output	High speed ssi chip 0 select
SFC_GPC	Bidirection	High speed ssi general-purpose control
SFC_CE1	Bidirection	High speed ssi chip 1 select
OTHER		
BOOT_SEL0	Input	It is taken as BOOT select bit 0 by BOOT ROM code
DRV_VBUS	Output	USB-5V control signal
GPIO_PB31	Bidirection	GPIO group B bit 31
MIPI_SEL	Output	Sensor select signal

NOTE

1.The meaning of phases in IO cell characteristics are:

- Pullup: The IO cell contains a pull-up resistor and fixed pull up.
- Pulldown: The IO cell contains a pull-down resistor and fixed pull down.
- Z: The IO cell during reset and after the pull up and down function is disabled.
- AI: Analog Input.
- AO: Analog Output.
- AIO: Analog Inout.

2.DVP_Dx signals can input form this Pad when configure the MIPI PHY to TTL model.

5.6The Ball Assignment of T23N

Figure 5-1 show the ball assignment of T23N.

confidential for 先智电子

Copyright© 2005-2023Ingenic Semiconductor Co., Ltd. All rights reserved.

Figure5-1T23NBall Assignment

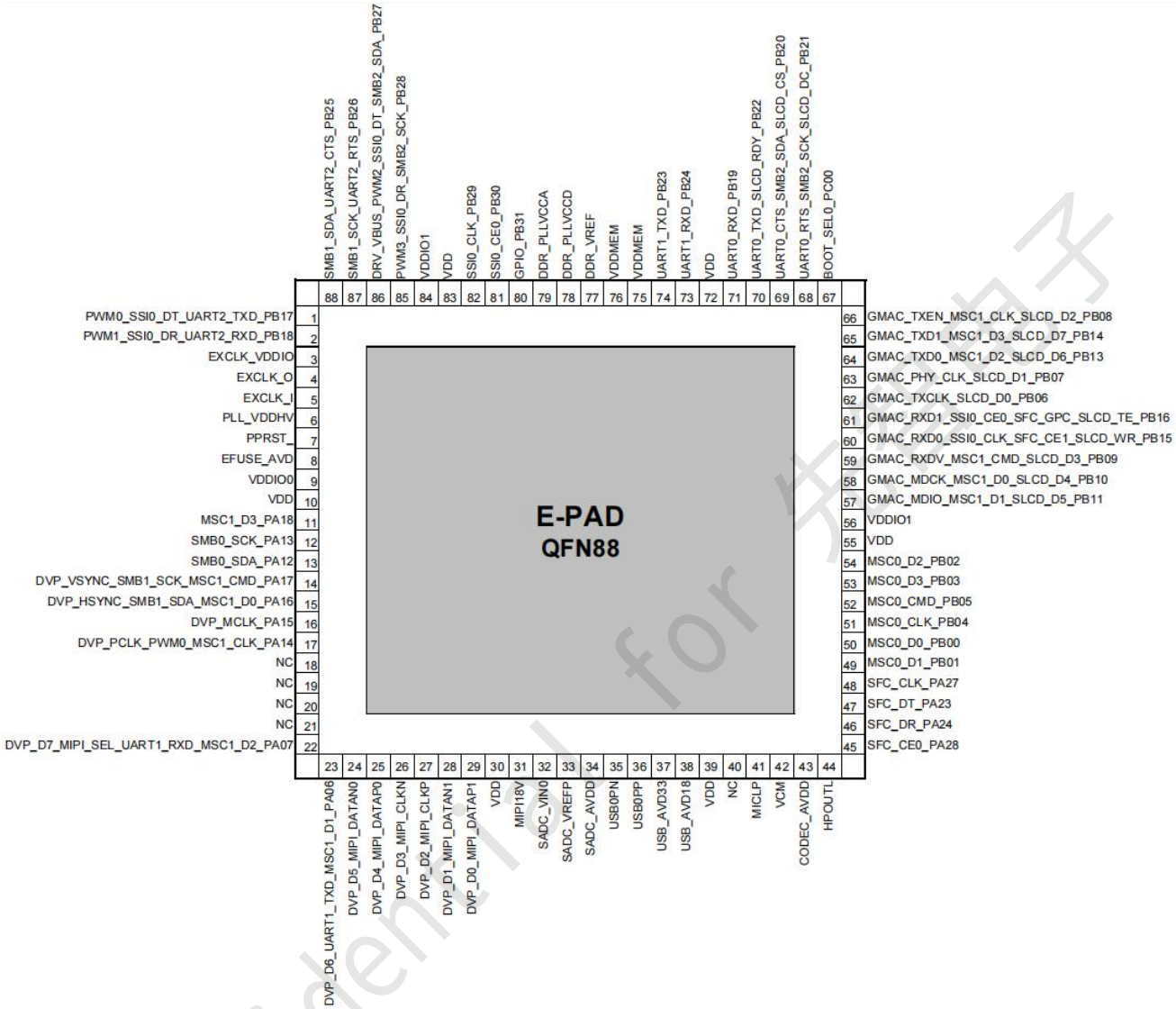

Confidential for 先锋电子

Copyright© 2005-2023Ingenic Semiconductor Co., Ltd. All rights reserved.

6 Electrical Specifications

6.1 Power Consumption Parameters

Table 6-1 describes power consumption parameters.

- The values of power consumption parameters are provided based on typical application scenarios.
- Design board power supplies by following the T23N Hardware Design User Guide.

Table 6-1 Power consumption parameters

Symbol	Parameter	Typ	Max	Unit
VDDMEM	DDR power	TBD	TBD	mW
VDD	SOC core power	TBD	TBD	mW

The SOC and DDR core power supplies need to be combined into one power supply. For details, see the T23N Hardware Design User Guide.

6.2 Recommended Operating Conditions

Table 6-2 Recommended operating conditions for power supplies

Symbol	Description	Min	Typ	Max	Unit
VDDMEM	VDDMEM voltage for SSTL18 (DDR2)	1.62	1.8	1.98	V
DDR_PLLVCCA	DDR PLL power supplies voltage	1.62	1.8	1.98	V
DDR_PLLVCCD	DDR PLL power supplies voltage	0.72	0.8	0.88	V
VDDIO0	GPIO power domain 0 supplies voltage	1.62	1.8	1.98	V
VDDIO1	GPIO power domain 1 supplies voltage	1.5	3.3	3.63	V
VDD	VDD core supplies voltage	0.72	0.8	0.88	V
PLL_VDDHV	APLL, MPLL and VPLL analog voltage	1.62	1.8	1.98	V
EFUSE_AVD	EFUSE program supplies voltage	1.62	1.8	1.98	V
USB_AVD33	USB PHY VCCA3P3 analog voltage	3.0	3.3	3.6	V
USB_AVD18	USB PHY VCC18 analog voltage	1.62	1.8	1.98	V
SADC_AVDD	SAR-ADC analog voltage	1.62	1.8	1.98	V
CODEC_AVDD	CODEC analog voltage	1.62	1.8	1.98	V
MIPI18V	MIPI analog voltage	1.62	1.8	1.98	V

Confidential for 先智电子

Copyright© 2005-2023Ingenic Semiconductor Co., Ltd. All rights reserved.

Table 6-3 Recommended operating conditions for VDDIO0/VDDIO1 supplied pins

Symbol	Parameter	Min	Typ	Max	Unit
V_{IH18}	Input high voltage for 1.8V I/O application	*0.65	-	+0.3	V
V_{IL18}	Input low voltage for 1.8V I/O application	-0.3	-	*0.35	V
V_{IH25}	Input high voltage for 2.5V I/O application	1.7	-	+0.3	V
V_{IL25}	Input low voltage for 2.5V I/O application	-0.3	-	0.7	V
V_{IH33}	Input high voltage for 3.3V I/O application	2	-	+0.3	V
V_{IL33}	Input low voltage for 3.3V I/O application	-0.3	-	0.8	V

Table 6-4 Recommended operating conditions for others

Symbol	Description	Min	Typ	Max	Unit
T_A	Operating Ambient Temperature	TBD	25	TBD	°C
T_J	Operating Junction Temperature	TBD	25	TBD	°C
T_J	Maximum Junction Temperature	TBD	25	TBD	°C
T_{STG}	Storage Temperature	TBD	25	TBD	°C

6.2.1 Power Domain VDDIO0 DC Characteristics

Parameter		Min	Nom	Max	Unit
V_{IL}	Input Low Voltage	0	-	0.3*VDDIO	V
V_{IH}	Input High Voltage	0.7*VDDIO	-	VDDIO	V
VOH	Output High Voltage	VDDIO – 0.45		VDDIO	V
VOL	Output Low Voltage	0		0.45	V
V_{PU}	Weak Pull-Up Current	12µ	-	36 µ	A
V_{PD}	Weak Pull-Down Current	12µ	-	36 µ	A
V_{HYST}	Hysteresis	0.1xVDDIO	-	-	V
IOFF	Total leakage	-	-	14.25 µ	A
I_PAD_ Leakage	Input PAD leakage	-	-	1.15 µ	A

6.2.2 Power Domain VDDIO1 DC Characteristics

Parameter		Min	Nom	Max	Unit
V_{IL}	Input Low Voltage	0	-	0.325xVDDIO	V
V_{IH}	Input High Voltage	0.675 x VDDIO	-	VDDIO	V
VOH	Output High Voltage	0.8 x VDDIO		VDDIO	V
VOL	Output Low Voltage	0		0.2x VDDIO	V
V_{PU}	Weak Pull-Up Current	20	-	100	µA
V_{PD}	Weak Pull-Down Current	20	-	100	µA
V_{HYST}	Hysteresis	100	-	-	V
Temp	Operating Temperature	–40	-	125	°C

Confidential for 华清电子

Copyright© 2005-2023Ingenic Semiconductor Co., Ltd. All rights reserved.

6.3 Audio Codec

6.3.1 Analog Interface Description

Microphone input

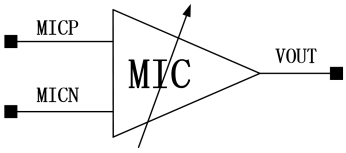

There are two inputs channels named left ADC channel and right ADC channel. In the each channel, there are two inputs which are configured as differential input by the microphone PGA(MICL)

The microphone inputs are MICLP and MICLN. Microphone PGA has a gain range from 0dB to 20dB.

ALC

Automatic Level Control(ALC) function is included to adjust the signal level, which is input into ADC. ALC will measure the signal magnitude and compare it to defined threshold. Then it will adjust the ALC controlled PAG(ALC_L and ALC_R) gain according to the comparison result.

The programmable gain range of ALC controlled PAG is from -18dB to +28.5dB. The tuning step is 1.5dB.

DAC OUTPUT

Innosilicon Codec supports headphone output or line output configurations. The output can drive load through DC-blocking capacitor.

In the configuration using DC-blocking capacitor, shown in the following figure, the headphone ground is connected to the real ground. The capacitance and the load resistance determine the lower cut-off frequency. For instance, if 600Ω and 4.7uF DC-blocking capacitor are used, the lower cut-off frequency is:

$$f = \frac{1}{2\pi RC} = \frac{1}{2\pi \times 600 \times 4.7 \times 10^{-6}} = 56.5Hz$$

The DC-blocking capacitor can be increased to lower the cut-off frequency for better bass response.

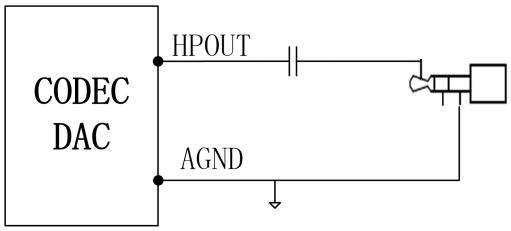

The out driver has a gain range from -39dB to +6dB with a tuning step of 1.5dB.

Confidential for 先智电子

Copyright© 2005-2023Ingenic Semiconductor Co., Ltd. All rights reserved.

MICROPHONE BIAS

The output of the Microphone bias is used for bias external microphones. The bias voltage can vary from 0.8*AVDD to 0.975*AVDD with a step of 0.025*AVDD.

6.4 USB 2.0 PHY

6.4.1 DC/AC Specifications

Table 6-5 Transmitter Specification

Description	Min	Typ	Max	Unit
USB_AVD33	3.0	3.3	3.6	V
High input level(V_{IH})	-	1.2	-	V
Low input level(V_{IL})	-	0	-	V
Output resistance(R_{OUT}) Classic mode(V_{OUT} = 0 or 3.3V)	40.5	45	49.5	ohms
HS mode(V_{OUT} = 0 to 800mV)	40.5	45	49.5	ohms
Output capacitance(seen from D+ or D-)(C_{OUT})	-	-	3	pF
Differential output signal high Classic(LS/FS); I_O = 0mA(V_{OH})	2.97	3.3	3.63	V
Classic(LS/FS); I_O = 6mA	2.2	2.7	-	
HS mode; I_O = 0mA	360	400	440	mV
Differential output signal low Classic(LS/FS); I_O = 0mA(V_{OL})	-0.33	0	0.33	V
Classic(LS/FS); I_O = 6mA	-	0.3	0.8	
HS mode; I_O = 0mA	-40	0	40	mV
Output Common Mode Voltage Classic(LS/FS) mode(V_M)	1.45	1.65	1.85	V
HS mode	0.175	0.2	0.225	V
Rise and fall time LS mode	75	87.5	300	ns
(T_R/T_F) FS mode	4	12	20	ns
HS mode	0.8	1.0	1.2	ns
Vring into load	-	-	10	%
Propagation delay(data to D+/D-) LS mode	30	TBD	300	ns
FS mode	0		12	ns
HS mode	-		-	ns
Propagation delay(tx_en to D+/D-) Classic mode (TPZH/TPZL)	-	-	2	ns
HS mode	-	-	2	ns
Adaptive termination acquisition	-	-	7.5	7.5MHz Cycles

Table 6-6 Receiver Specifications

Description	Min	Typ	Max	Unit
USB_AVD33	3.0	3.3	3.6	V
Receiver sensitivity(RSENS) Classic mode		+-250		mV

Confidential for 先锋电子

Copyright© 2005-2023Ingenic Semiconductor Co., Ltd. All rights reserved.

Description	Min	Typ	Max	Unit
HS mode		+-25		mV
Receiver common mode(RCM)				
Classic mode	0.8	1.65	2.5	V
HS mode(differential and squelch comparator)	0.1	0.2	0.3	V
HS mode(disconnect comparator)	0.5	0.6	0.7	V
Input capacitance(seen at D+ or D-)	-	-	3	pF
Squelch threshold	100	-	150	mV
Disconnect threshold	570	600	664	mV
High output level(V_{OH})	-	1.8	-	V
Low output level(V_{OL})	-	0	-	V
Propagation delay(TP)				
Classic mode(D+/D- to cl_diff_rx)			16	ns
Classic mode(D+/D- to se_datap_rx or se_datam_rx)			8	ns
HS mode(D+/D- to input of DLL)			1	ns

Table 6-7Clock and Data Recovery Specifications

Description	Min	Typ	Max	Unit
Bit loss *The total bit loss through a receive path is 4 bit times. This is divided between the Rx un-squelching circuitry and the DLL.			4	bits
Latency(intrinsic)			4	Clock cycles
Latency(elasticity buffer)			17	Clock cycles

Figure 6-1Single Ended Signal Swing Differential Signal Swing

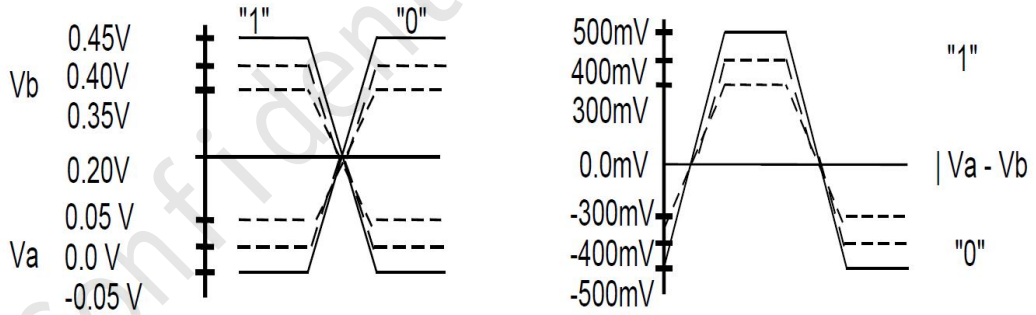

6.5 Power On, Reset and BOOT

6.5.1 Power-On Sequence

The external voltage regulator and other power-on devices must provide the T23N processor with a specific sequence of power and resets to ensure proper operation.Figure 6-2 shows this sequence and Table 6-8 gives the timing parameters. Following are the name of the power.

- VDD08: all 0.8V power supplies, VDD, DDR_PLLVCCD, PLL_VDD

Confidential for 先智电子

Copyright© 2005-2023Ingenic Semiconductor Co., Ltd. All rights reserved.

- VMEM: VDDMEM
- VDD18:VDDIO0, DDR_PLLVCCA, PLL_VDDHV, USB_AVD18, MIPI18V,SADC_AVDD, CODEC_AVDD
- VDD33: VDDIO1, USB_AVD33

Table 6-8 Power-On Sequence Parameters

Symbol	Parameter	Min	Typ	Max	Unit
T1	VDD08 rise time[1]	-	-	400	us
T2	VMEM rise time	-	-	400	us
T3	VDDIO18 rise time	-	-	400	us
T4	VDDIO33 rise time	-	-	400	us
T5	Delay between VDD08 arriving 50% to VMEM arriving 50%	T1*0.5	-	-	us
T6	Delay between VMEM arriving 50% to VDDIO18 arriving 50%	0	-	-	us
T7	Delay between VDDIO18 arriving 50% to VDDIO33 arriving 50%	T3	-	-	us
T8	Delay between VDDIO18 arriving 50% to POR_OUT arriving 50%	-	240	-	us
T9	Delay between POR_OUT arriving 50% to chip inner reset arriving 50%		10		ms
T10	PPRST_ kept time[2]		100		us

NOTE

- [1]: The power rise time is defined as 10% to 90%.
- [2]: The PPRST_ must be kept at least 100us. After PPRST_ is deserted, the corresponding chip reset will be extended at least 40ms.

Figure 6- 2Power-On Sequence Diagram

TBD

6.5.2 Reset procedure

There are 3 reset sources: 1. PPRST_ pin reset; 2. POR hardware reset;3.WDT timeout reset. After reset, program start from boot.

- PPRST_ pin reset.

This reset is triggered when PPRST_ pin is put to logic 0. It happens in RESET-KEY pressed to reset the chip from the unknown dead state. The reset end time is about 1M EXCLK cycles after rising edge of PPRST_.

Confidential for 先智电子

Copyright© 2005-2023Ingenic Semiconductor Co., Ltd. All rights reserved.

- POR(Power-On-Reset) hardware reset.

The chip POR circuit provides reliable reset function for general applications. Powered by 1.8V/3.3V analog supply and monitors 0.8V digital and 3.3V analog supply. It generates reset signal to digital logic. Set low if analog supply or digital supply is below the threshold voltage(typical 2.6V threshold for 3.3V supply and 0.6V threshold for 0.8V supply), and will be set high if both of analog supply and digital supply exceed the threshold voltage.

- WDT reset.

This reset happens in case of WDT timeout. The reset keeps for about a few RTCLK cycles.

After reset, all GPIO shared pins are put to GPIO input function and most of their internal pull-up/down resistor are set to on, see “5 Pin Description” for details. The oscillators are on. The USB 2.0 OTG PHY, the audio CODEC DAC/ADC, the SAR-ADCs is put in suspend mode.

6.5.3 BOOT

The boot sequence of the T23N is controlled by boot_sel[0]. The configuration is shown as follow:

Table6-9 Boot Configuration of T23N

boot_sel[0]	Boot method
0	MMC/SD boot @ MSC0 (MMC/SD)
1	SFC boot @ CS4 (SPI boot)

NOTE

1. When SFC boot start failure, the program in bootrom will go into MSC0 boot, Ifit is boot from MMC/SD card at MSC0, its function pins MSC0_D0, MSC0_CLK, MSC0_CMD are initialized, the boot program loads the maximum56KB code from MMC/SD card to cache and jump to it.

2. When MSC0 boot start failure, the program in bootrom will go into MSC1 boot，Ifit is boot from MMC/SD card at MSC1, its function pins MSC1_D0, MSC1_CLK, MSC1_CMD are initialized, the boot program loads the maximum56KB code from MMC/SD card to cache and jump to it.If MSC1 boot start failure, jump to USB boot.

Confidential for 先智电子

Copyright© 2005-2023Ingenic Semiconductor Co., Ltd. All rights reserved.

Figure 6-3 Boot sequence diagram of T23N

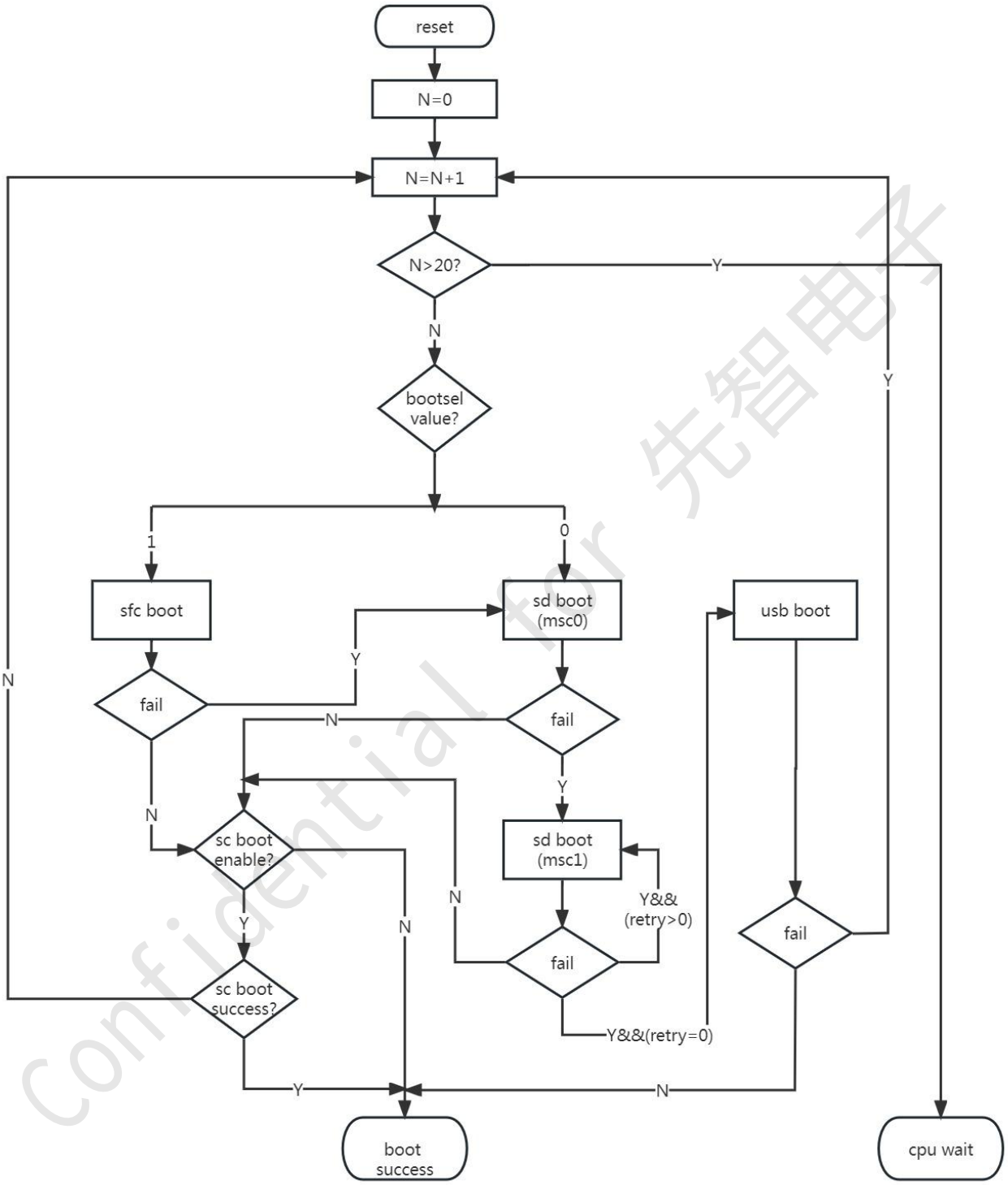

As shown in boot sequence Block Diagram，After reset, the boot program on the internal boot ROM executes as follows:

1. Disable all interrupts and read boot_sel[0] to determine the boot method.

Copyright© 2005-2023Ingenic Semiconductor Co., Ltd. All rights reserved.

2. There 26KB backup reading failed, the 26KB backup at 128th, 256th, …, and finally 1024th page will be tried in consecutive order.
3. If it is boot from MMC/SD card at MSC0, its function pins MSC0_D0, MSC0_CLK, MSC0_CMD are initialized, the boot program loads the maximum 56KB code from MMC/SD card to cache and jump to it.
4. If it is boot from USB, a block of code will be received through USB cable connected with host PC and be stored in cache. Then branch to this area in cache.
5. If it is boot from SPI NAND/NOR at SFC, its function pins SFC_CLK,SFC_CE, SFC_DR,SFC_DT, SFC_WP,SFC_HOLD are initialized,the boot program loads the maximum 56KB code from SPI NAND/NOR flash to cache and jump to it.

Confidential for 先智电子

Copyright© 2005-2023Ingenic Semiconductor Co., Ltd. All rights reserved.

7 Thermal Characteristics

7.1 Temperature and Thermal Resistance Parameters

Table 7-1, Table 7-2, and Table 7-3 describe temperature and thermal resistance parameters.

Table7-1 Operating environment parameters

Symbol	Parameter	Min	Max	Unit
Ambient temperature	T_A	TBD	TBD	℃

CAUTION

Under normal working conditions, the chip junction temperature should be less than or equal to the maximum junction temperature for normal working in Table 7-1.

Table 7-2 lists the requirements on the junction temperatures of T23N.

Table 7-2 Requirements on the junction temperatures of T23N

Package	Maximum Junction Temperature (ºC)
QFN88	TBD

Table 7-3 lists the thermal resistance parameters of T23N.

Table 7-3 Thermal resistance parameters

Parameter	Symbol	Min	Typ	Max	Unit
Junction-to-ambient thermal resistance	θ_{JA}	TBD	TBD	TBD	ºC/W
Junction-to-board thermal resistance	θ_{JB}	TBD	TBD	TBD	ºC/W
Junction-to-case thermal resistance	θ_{JC}	TBD	TBD	TBD	ºC/W

Confidential for 先智电子

Copyright© 2005-2023Ingenic Semiconductor Co., Ltd. All rights reserved.

8 Interface Timings

8.1 SFC Interface Timings

8.1.1 Propagation Delay

The propagation delay do not effect the data transmission and it would not effect the data reception when the serial clock has a low frequency as shown in the Figure 8-1.

But when the serial clock run at a fast frequency the propagation delay will cause the incoming data could not arrival at the right clock edge then the sampling point should be adjustable as shown in the Figure 8-2.

Figure 8-1 Sample Point (No Delay)

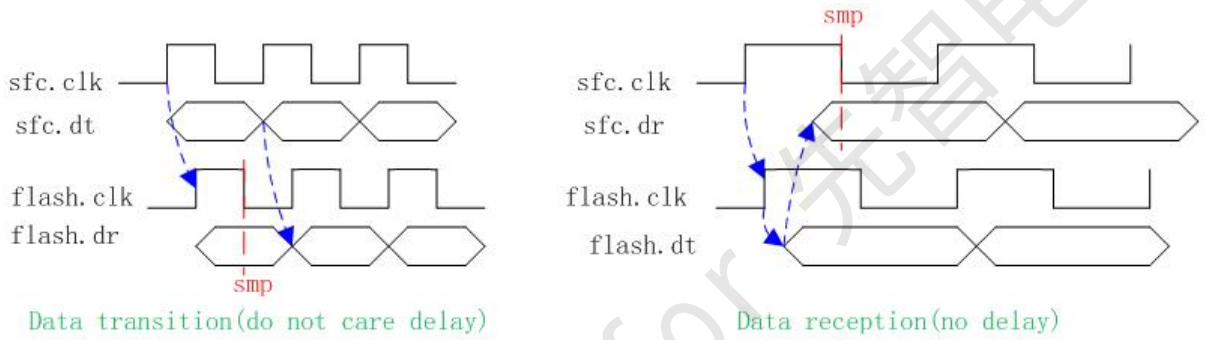

Figure 8-2 Sample Point (Delay)

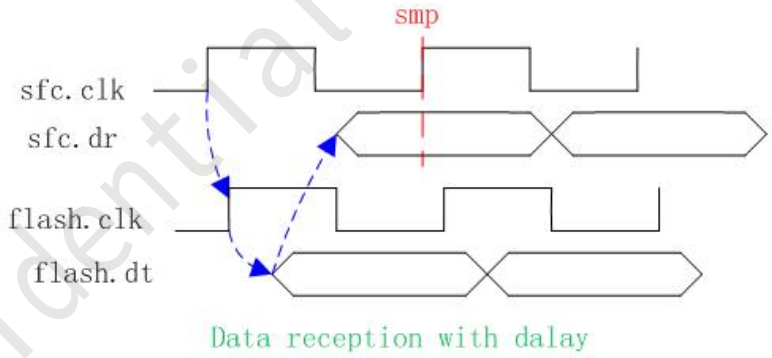

8.1.2 AC Timing

Tsetup (tSLCH), tHLOD (tCHSH), tSH (tSHSL), are configurable.

Figure 8-3AC Timing

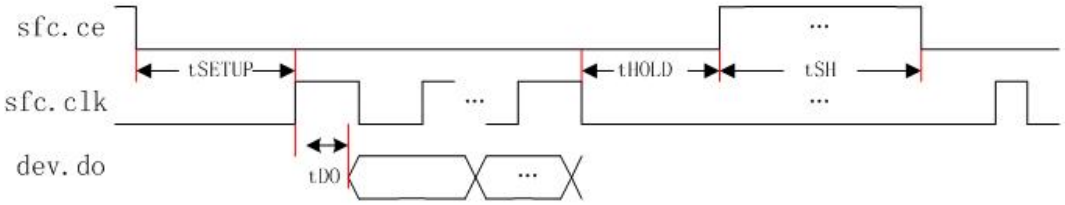

confidential for 先智电子

Copyright© 2005-2023Ingenic Semiconductor Co., Ltd. All rights reserved.

8.2 Ethernet MAC Port Timings

8.2.1 RMII Timings

Figure 8-4 shows the 10/100 Mbit/s RX timing of the RMII.

Figure 8-410/100 Mbit/s RX timing of the RMII

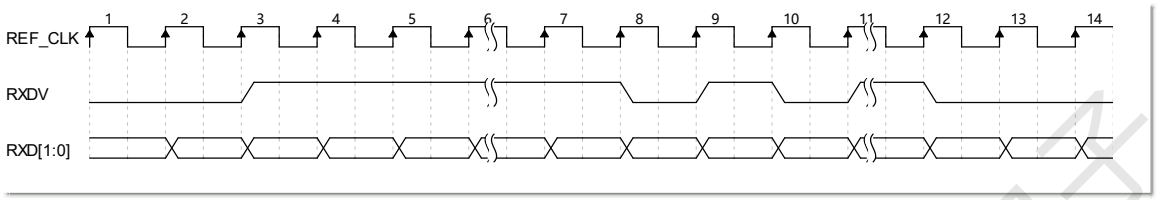

Figure 8-5 shows the 10/100 Mbit/s TX timing of the RMII.

Figure 8-510/100 Mbit/s TX timing of the RMII

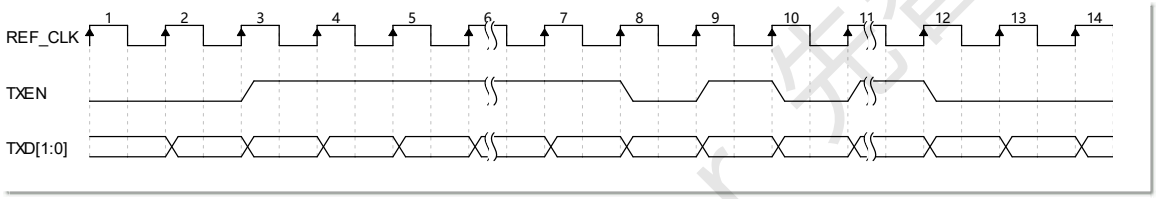

Figure 8-6 shows the timing parameters of the RMII.

Figure 8-6 Timing parameters of the RMII

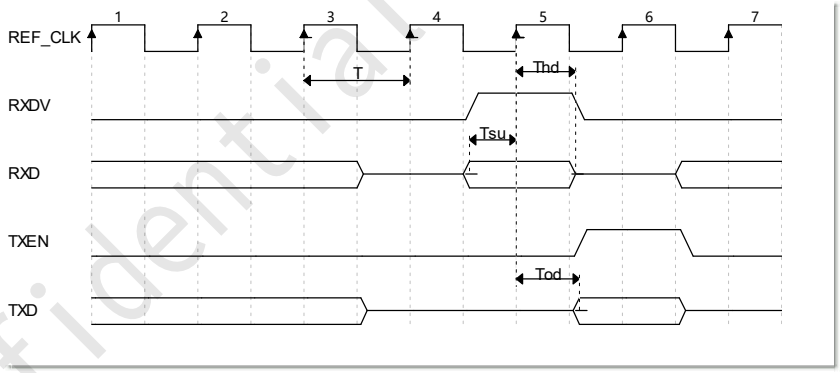

Table 8-1 describes the RMII timing parameters of the RMII.

Table 8-1 Timing parameters of the RMII

Parameter	Symbol	Signal	Min	Max	Unit
RMII clock cycle	T	REF_CLK	20	20	ns
Setup time of RMII signal	Tsu (RX)	RXDV/RXD[1:0]	4	N/A	ns
Hold time of RMII signal	Thd (RX)	RXDV/RXD[1:0]	2	N/A	ns
RMII output signal delay	Tod (TX)	TXEN/TXD[1:0]	3	16	ns

Confidential for 先智电子

Copyright© 2005-2023Ingenic Semiconductor Co., Ltd. All rights reserved.

8.2.2 MDIO Interface Timings

Figure 8-7shows the read timing of the MDIO interface.

Figure 8-7 Read timing of the MDIO interface

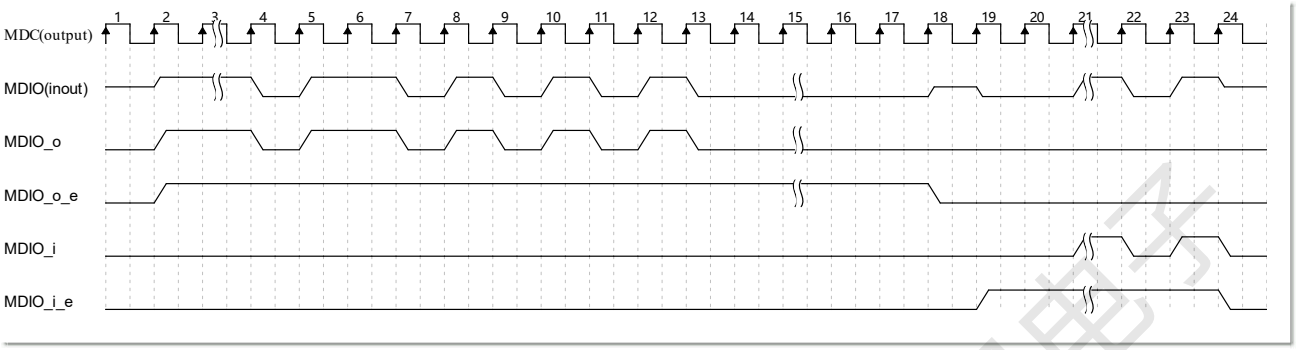

Figure 8-8 shows the write timing of the MDIO interface.

Figure 8-8 Write timing of the MDIO interface

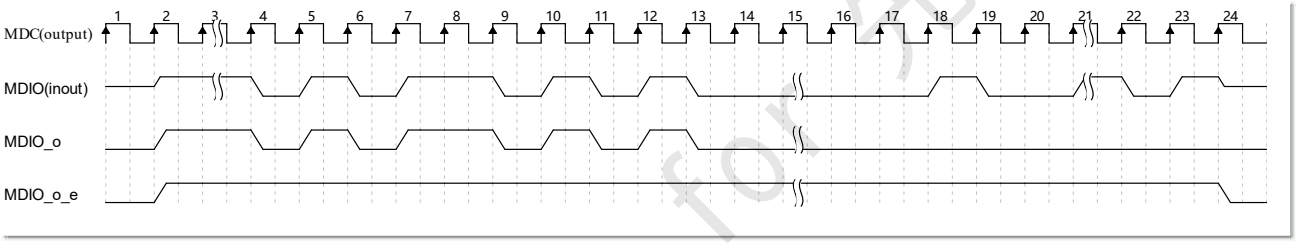

Figure 8-9 shows the RX timing parameters of the MDIO interface.

Figure 8-9 RX timing parameters of the MDIO interface

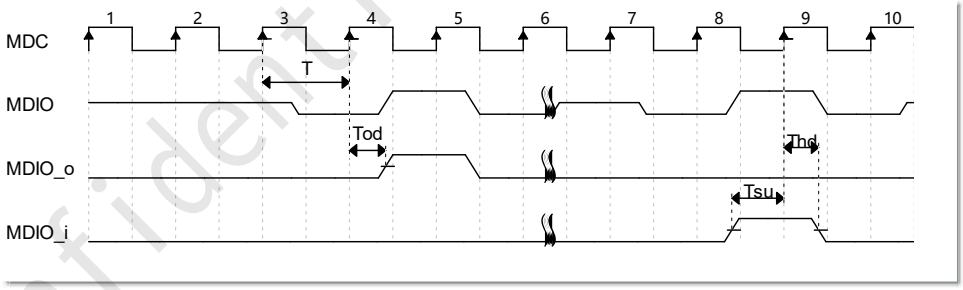

Table 8-2 describes the timing parameters of the MDIO interface.

Table 8-2 Timing parameters of the MDIO interface

Parameter	Symbol	Signal	Min	Max	Unit
MDIO clock cycle	T	MDC	400	400	ns
MDIO output signal delay	Tod(TX)	MDIO	0	300	ns
Setup time of MDIO signal	Tsu(RX)	MDIO	10	N/A	ns
Hold time of MDIO signal	Thd(RX)	MDIO	10	N/A	ns

Confidential for 先智电子

Copyright© 2005-2023Ingenic Semiconductor Co., Ltd. All rights reserved.

8.3 VI Interface Timing

8.3.1 BT Timings

Figure 8-10 shows the VI interface timing in CMOS mode.

Figure 8-10 VI interface timing in CMOS mode

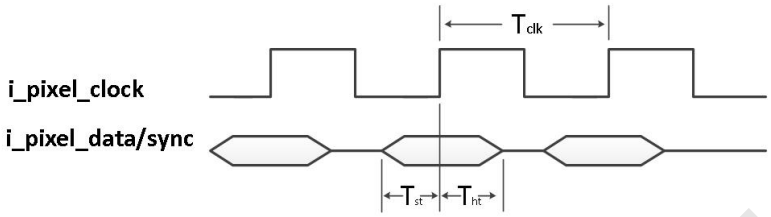

Table 8-3 describes the VI interface timing parameters.

Table 8-3 VI interface timing parameters

Parameter	Symbol	Min	Typ	Max	Unit
Video Input clock cycle	T_{clk}	6.0	N/A	N/A	ns
Input signal setup time	T_{st}	TBD	N/A	N/A	ns
Input signal hold time	T_{ht}	TBD	N/A	N/A	ns

8.3.2 MIPI-CSI Timings

Table 8-4 describes the MIPI-CSI timing parameters.

Table 8-4 MIPI-CSI timing parameters

Symbol	Description	Min	Tye	Max	Unit
F_{MAX}	Data rate	N/A	N/A	2	Gbit/s
T_{PERIOD}	Differential clock cycle	1	T	N/A	ns
TDUTY	Differential clock duty cycle	0.45T	N/A	0.55T	ns
TSET	Differential clock setup time	0.15 x UI	N/A	N/A	ns
THD	Differential clock hold time	0.15 x UI	N/A	N/A	ns
TRISE	Differential clock rising time (20%–80%)	0.15	N/A	N/A	ns
TFALL	Differential clock falling time (20%–80%)	N/A	N/A	0.3 x UI	ns

NOTE

UI = T/2

confidential for 先智电子

Copyright© 2005-2023Ingenic Semiconductor Co., Ltd. All rights reserved.

8.4SMB Interface Timing

Figure 8-11 shows the SMB transfer timing.

Figure 8-11SMB transfer timing

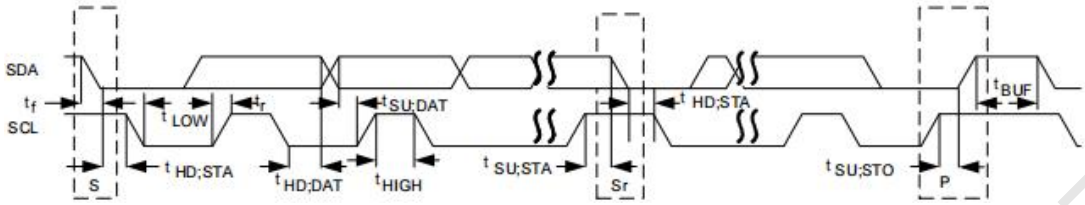

Table 8-5 describes the timing parameters of the SMB interface.

Table 8-5 Timing parameters of the SMB interface

Parameter	Symbol	Standard Mode		Fast Mode		Unit
		Min	Max	Min	Max	
Serial clock (SCL) frequency	f_{SCL}	0	100	0	400	kHz
Start hold time	$t_{HD;STA}$	4.0	N/A	0.6	N/A	µs
SCL low-level cycle	t_{LOW}	4.7	N/A	1.3	N/A	µs
SCL high-level cycle	t_{HIGH}	4.0	N/A	0.6	N/A	µs
Start setup time	$t_{SU;STA}$	4.7	N/A	0.6	N/A	µs
Data hold time	$t_{HD;DAT}$	0	3.45	0	0.9	µs
Data setup time	$t_{SU;DAT}$	250	N/A	100	N/A	ns
Serial data (SDA) and SCL rising time	t_r	N/A	1000	20 + 0.1 x C_b	300	ns
SDA and SCL falling time	t_f	N/A	300	20 + 0.1 x C_b	300	ns
End setup time	$t_{SU;STO}$	4.0	N/A	0.6	N/A	µs
Bus release time from start to end	t_{BUF}	4.7	N/A	1.3	N/A	µs
Bus load	C_b	N/A	400	N/A	400	pF
Low-level noise tolerance	V_{nL}	0.1 x V_{DD}	N/A	0.1 x V_{DD}	N/A	V
High-level noise tolerance	V_{nH}	0.2 x V_{DD}	N/A	0.2 x V_{DD}	N/A	V

8.5SSI Timings

Figure 8-12 shows the SSI timing.

Figure 8-12 SSI timing

Confidential for 先智电子

Copyright© 2005-2023Ingenic Semiconductor Co., Ltd. All rights reserved.

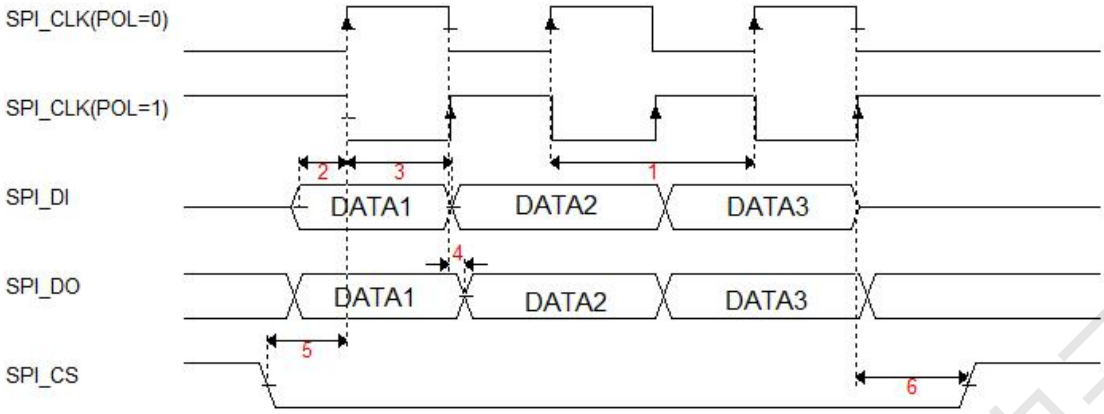

Table 8-6 describes the SSI timing parameters.

Table 8-6 SSI timing parameters

Parameter	Symbol	MIN	TYPE	MAX	Unit	Remark
Cycle time SPI_CLK	Tc	DEV_CLK/256	N/A	DEV_CLK/2	ns	Depends on Ctrl-register
Setup time SPI_DI	Tsu	N/A	1/2 Tc	N/A	ns	
Hold time SPI_DI	Th	N/A	1/2 Tc	N/A	ns	
Delay time SPI_DO	Td	0.1	N/A	0.7	ns	
Delay time SPI_CLK valid	Tb	1/2 Tc	N/A	4 Tc	ns	Depends on Ctrl-register
Delay time SPI_CS invalid	Te	1/2 Tc	N/A	4 Tc	ns	Depends on Ctrl-register

8.6 SDIO/MMC(MSC) Interface Timings

Figure 8-13 shows the default-speed timings of the SD/MMC interface.

Figure 8-13 The default-speed timings of the SD/MMC interface

Confidential for 先智电子

Copyright© 2005-2023Ingenic Semiconductor Co., Ltd. All rights reserved.

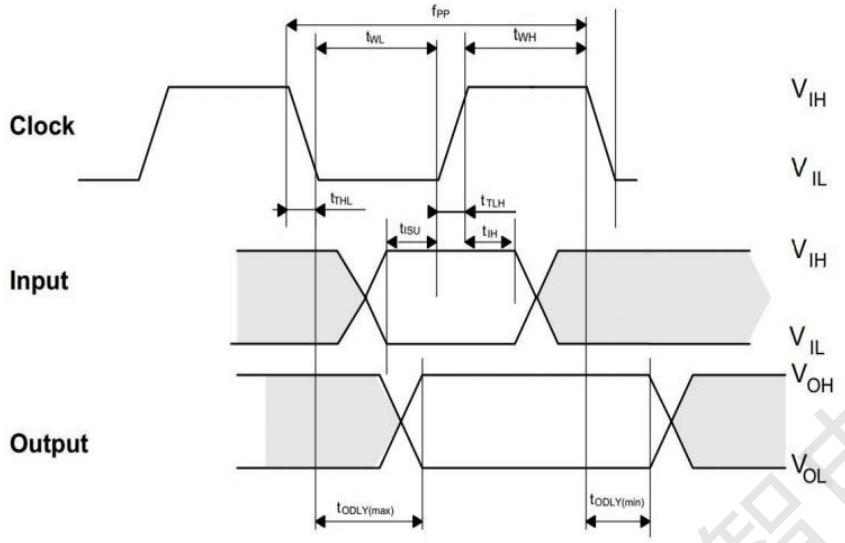

Speed Mode	Maximum Frequency (MHz)/Cycle (ns)		Minimum Input Hold Time	Minimum Input Setup Time	Maximum Output Delay of the Card
Backward legacy MMC card	26 MHz	38.5 ns	3ns	3ns	11.7ns
SD_SDR12	25 MHz	40 ns	5.0ns	5.0 ns	14 ns
Identification mode	400 kHz	2.5 µs	5.0ns	5.0 ns	50ns

Figure 8-14 shows the high-speed timings of the SD/MMC interface.

Figure 8-14High-speed timings of the SD/MMC interface

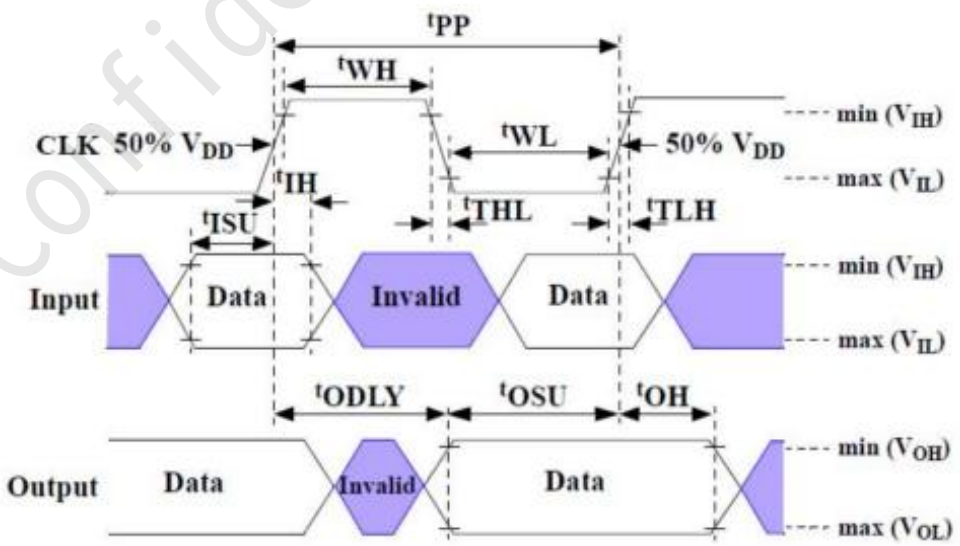

Confidential for 先智电子

Copyright© 2005-2023Ingenic Semiconductor Co., Ltd. All rights reserved.

Table 8-7 describes the high-speed mode timing parameters of the SD/MMC interface.

Table 8-7 Timing parameters of the SD/MMC interface

Speed Mode	Maximum Frequency (MHz)/Cycle (ns)		Minimum Hold Time	Minimum Setup Time	Maximum Output Delay of the Card
MMC_HS	50MHz	20 ns	3.0 ns	3.0 ns	13.7 ns
SD_SDR25	50MHz	20 ns	2.0 ns	6.0ns	14 ns
SD_HS	50 MHz	20 ns	2.0 ns	6.0 ns	14 ns
Identification mode	400 kHz	2.5 µs	5.0ns	5.0 ns	50ns

Confidential for 先智电子

Copyright© 2005-2023Ingenic Semiconductor Co., Ltd. All rights reserved.