Using Weak Light Sources to Power Sensor Nodes for Sustainable IoT

Mingzhe Li[1], Zhen Xiao[1], Cui Zhao[2], and Zhenjiang Li[1]
[1]Department of Computer Science, City University of Hong Kong, China
[2]Faculty of Electronic and Information Engineering, Xi'an Jiaotong University, China

Introduction

We presents WISE, a novel IoT node design that operates autonomously using weak light sources like indoor lamps. Its key innovation is a timing supply control architecture that reduces quiescent current to nA levels, optimizing energy use. The paper also proposes hardware customization and energy-aware scheduling methods. Three WISE configurations were implemented and tested, showing superior communication rates and energy efficiency compared to existing designs.

System Overview

- Node architecture (A): A novel design with timing control achieves ultra-low quiescent current using an external RTC and control logic.
- Component selection (B): An optimization scheme selects energy-efficient hardware combinations based on design needs.
- Duty-cycle regulation (C): An energy-aware method regulates duty cycles to sustainably operate under weak light.

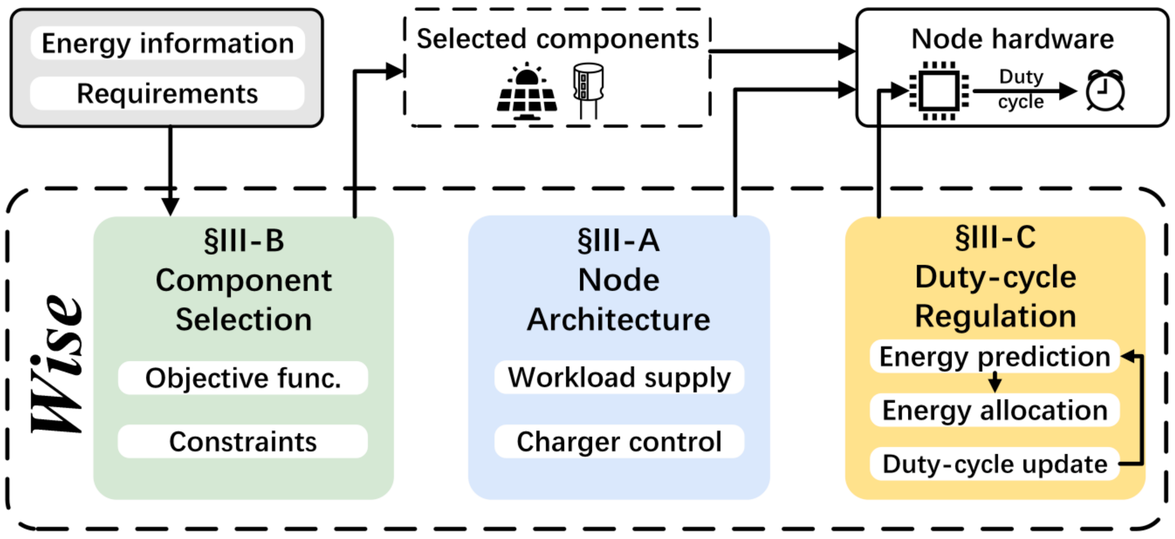

Design – Node Architecture

- Overall construction: To reduce high quiescent current, we introduce a timing control component using an external real-time clock (RTC). This allows the MCU to be powered off in sleep mode, cutting its quiescent current.
- Workload supply control: This sub-part receives a "Done" signal and I2C command from the MCU and outputs the "RegEn" signal to the regulator. In sleep mode, the RTC handles timing and, upon timer expiration, activates a D flip-flop to power the workload (via regulator enable pin) and wake the sensor node. After task completion, the MCU sends a "Done" pulse, clearing the regulator output, cutting power and returning to sleep mode.
- Charger's control: This sub-part implement enable/disable logic. A D flip-flop, set by the MCU via "D/N CLK" and "D/N DATA" lines controls the charger enable signal ($\overline{\text{ChgEn}}$) through a NOR gate. The charger is enabled during the day and disabled at night to avoid idle energy loss.

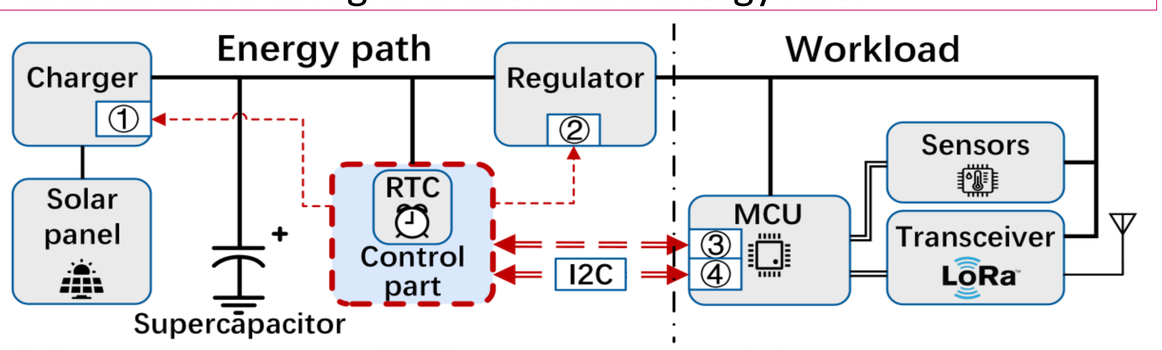

①,②: Enable pins of charger($\overline{\text{ChgEn}}$) and regulator(RegEn) ③,④: GPIO and I2C pins of MCU

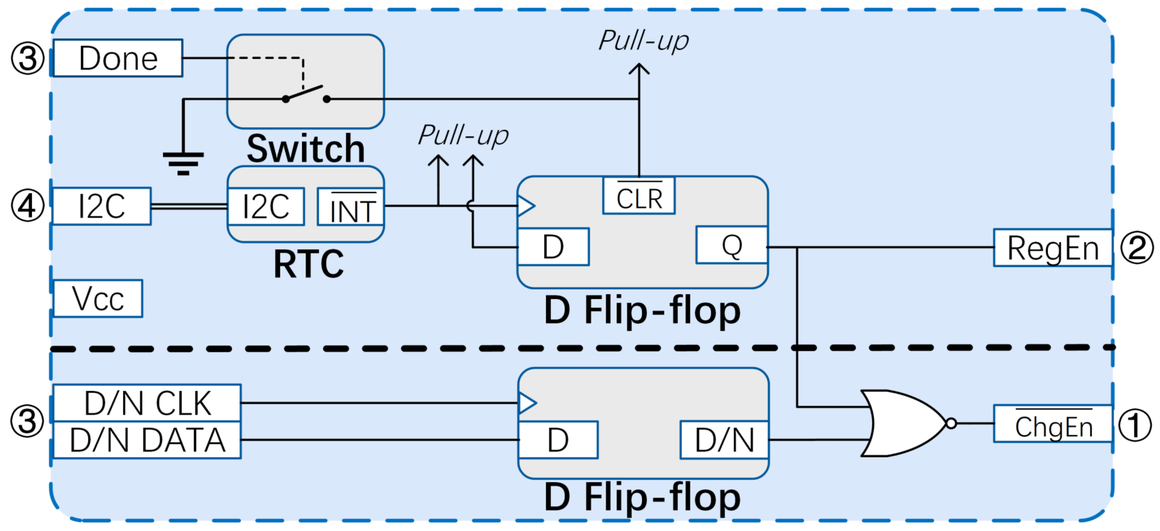

Design – Component Selection

Sensor node's behavior varies with different energy components, like solar panels and supercapacitors. Based on IoT deployment needs—prioritizing cost, performance, or a balance—we select optimal configurations to meet requirements. This optimization scheme is detailed as an optimization question:

$$\arg\max_{\mathrm{p}}\left(\frac{w}{\sum_i c_{p_i}} + (1-w)\times r_{\mathrm{p}}\right),$$ *Objective function*

$$s.t.\quad r_{\mathrm{p}} > 1, \left(r_{\mathrm{p}} := \frac{E_{in_{\mathrm{p}}}}{E_{con_{\mathrm{p}}}}\right)$$ *Performance constraint*

$$\sum_i c_{p_i} < b,$$ *Budget constraint*

$$E_{sc} > E_{in}$$ *Storage constraint*

Design – Duty-Cycle Regulation

- **Energy income prediction**: WISE predicts future energy by using profiles of average energy harvested at different times daily. The closest profile is chosen to estimate energy, with predictions for time slots calculated via weighted averaging and decay factors.
- **Duty-cycle updates**: Based on predicted energy and current supercapacitor levels, the duty cycle is adjusted to optimize sensing and communication within the energy budget. Updates are periodic, and daily energy profiles are refreshed with previous day's data.

Evaluation --- System Performance
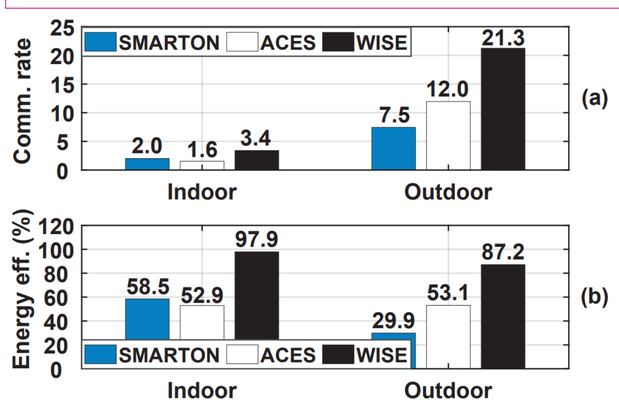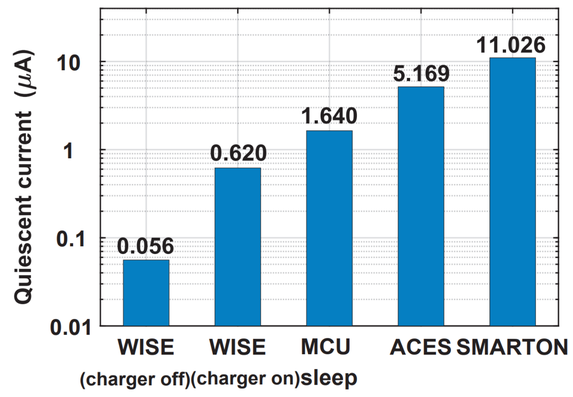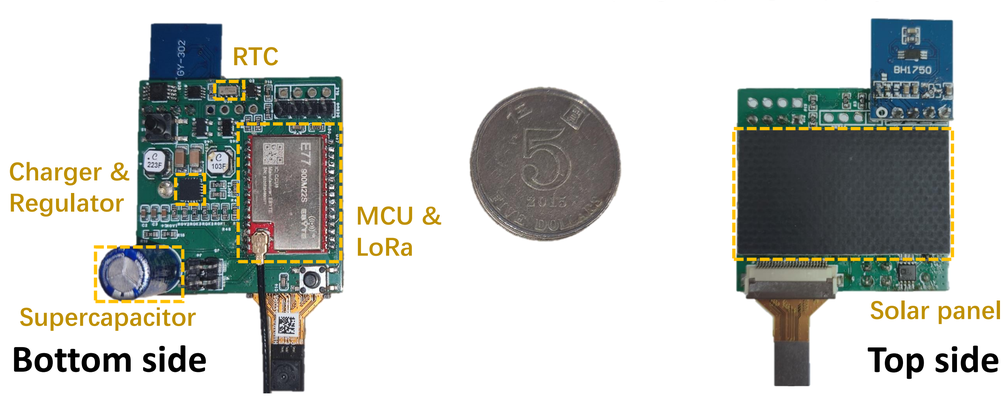
- WISE outperforms both baselines, achieves a **69.7%–120.0%** and **77.8%–185.2%** increase in communication rate in indoor and outdoor scenarios respectively.
- WISE's quiescent current can be as low as **56 nA**.