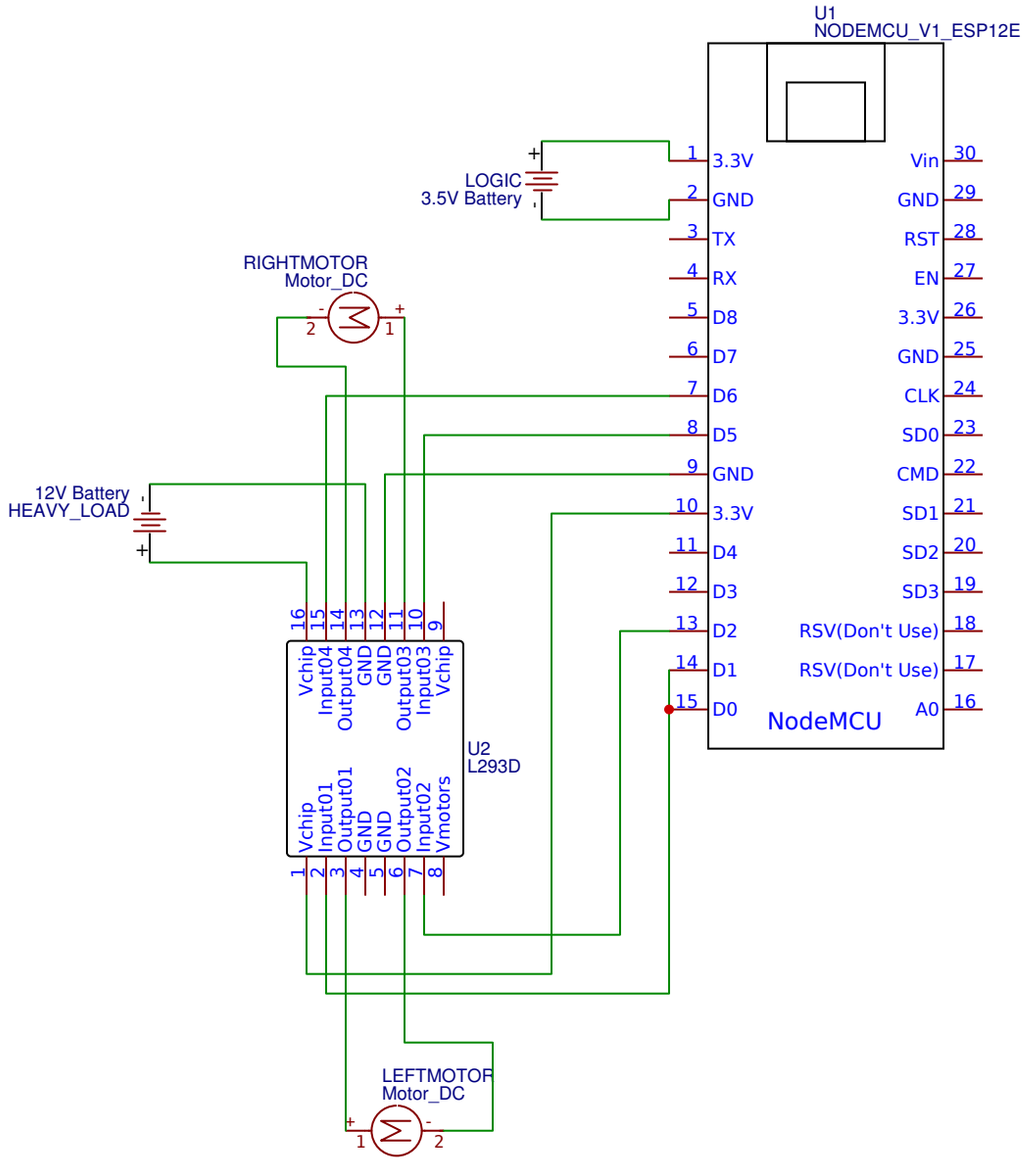

TITLE: Remote controlled 2 wheels bot	REV: 1.2
Date: 2018-10-12	Sheet: 1/1
EasyEDA V5.8.22	Drawn By: Minh Nhut