REV	DESCRIPTION	ECO	DATE
A	INITIAL RELEASE	1005	

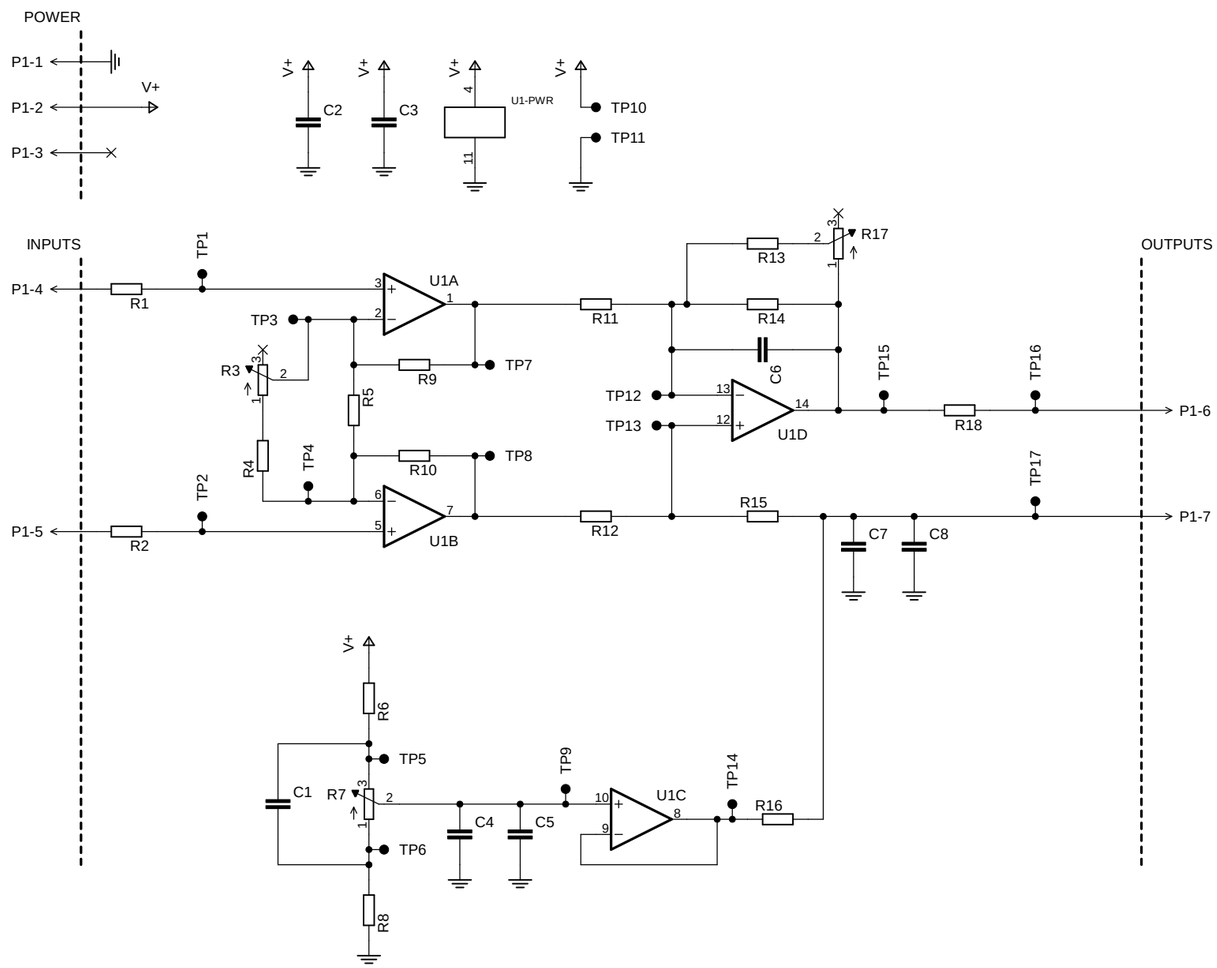

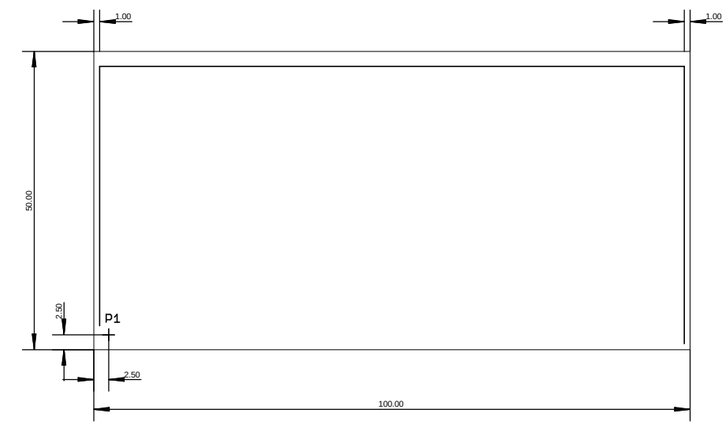

THIS DRAWING AND THE INFORMATION IT CONTAINS IS PROVIDED FOR EDUCATIONAL USE ONLY.

DATETIME STAMP	10/5/2023 9:03 AM
DR N. MANTEUFEL	DATE 05SEP2022
ENG	DATE
QA	DATE

minPCB

TITLE
INSTRUMENTATION AMPLIFIER

PRINTED CIRCUIT BOARD
OPERATIONAL AMPLIFIER
QUAD OPAMP CIRCUIT
SINGLE SUPPLY, DC BIAS TRIMMER

SIZE	DWG NO	REV
B	04A-020	A
SCALE NONE	SHEET 1/1	