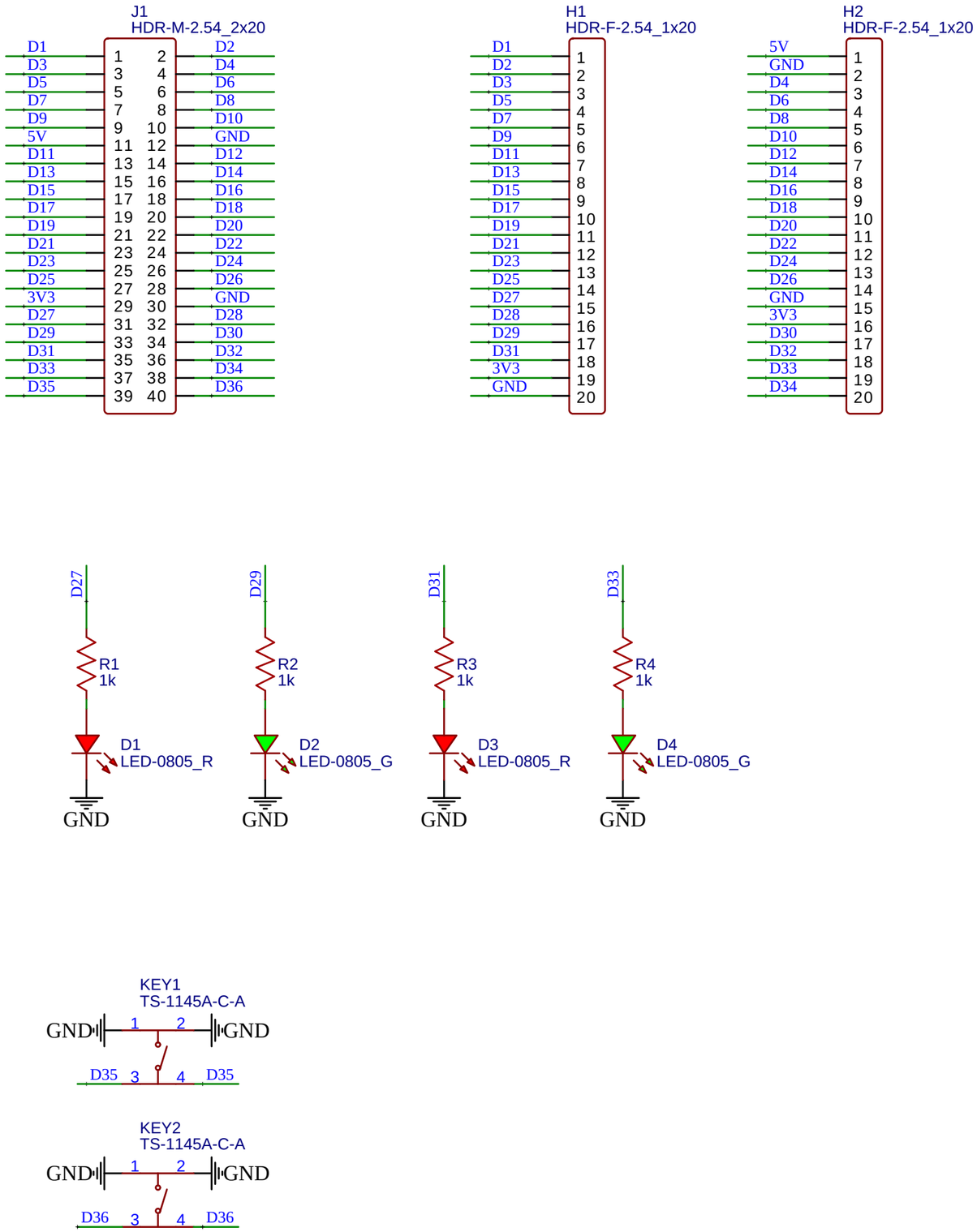

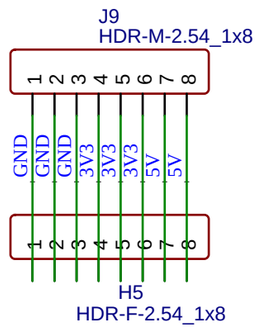

TITLE: Sheet_1	REV: 1.0
嘉立创EDA Company: Your Company	Sheet: 1/1
Date: 2023-11-29 Drawn By:	

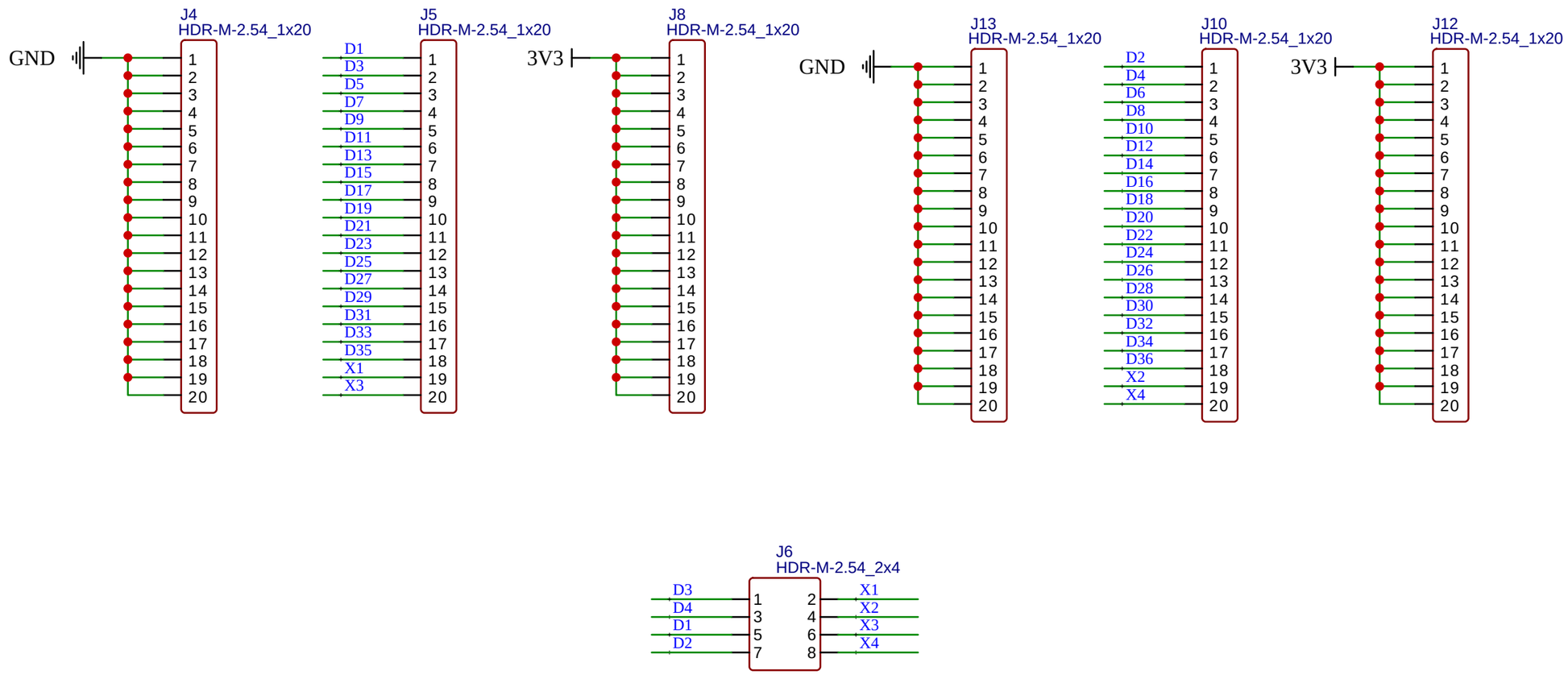

TITLE: Sheet_2		REV: 1.0
嘉立创EDA	Company: Your Company	Sheet: 1/1
	Date: 2023-11-29 Drawn By:	

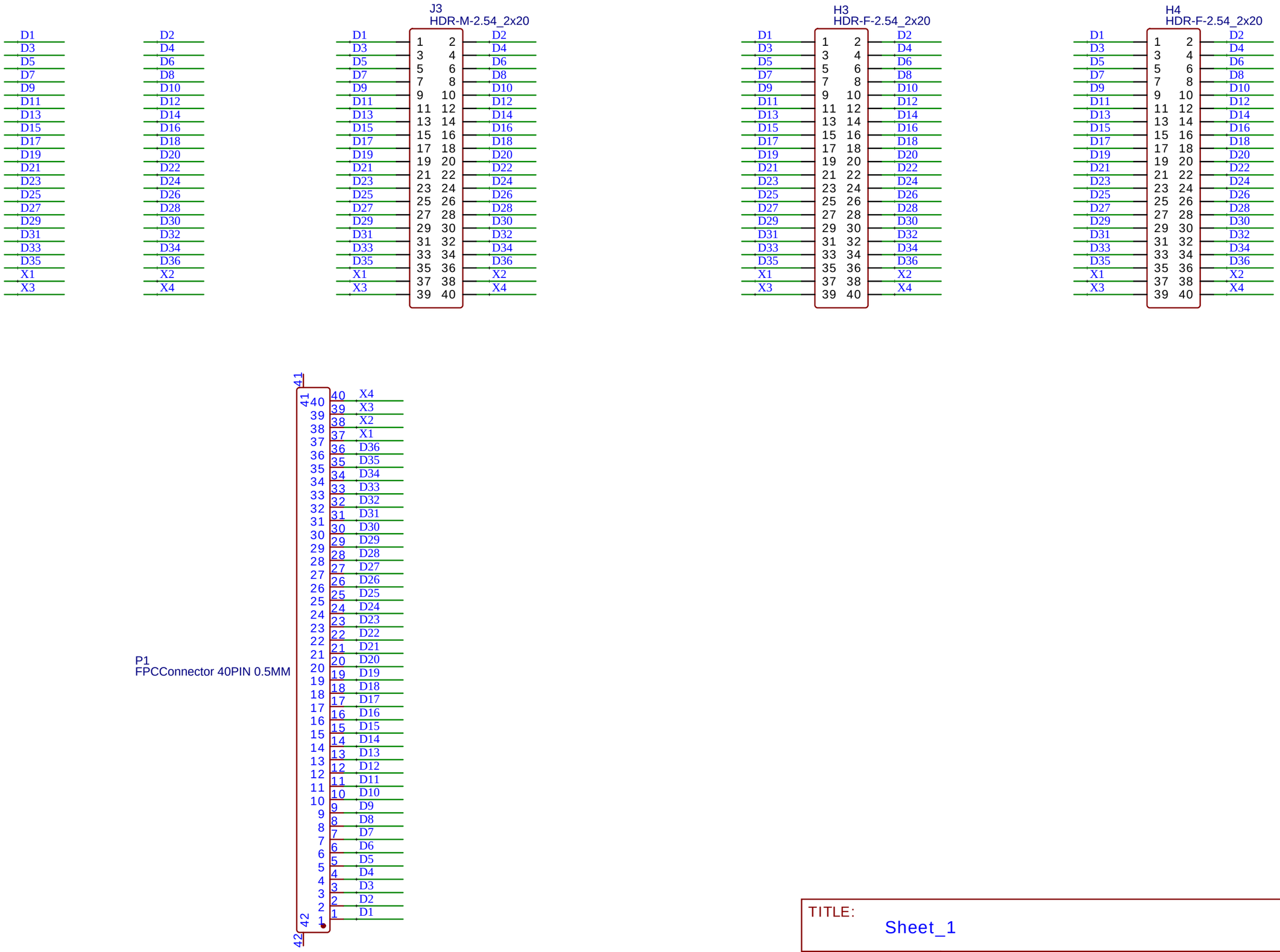

TITLE: Sheet_1	REV: 1.0
Company: Your Company	Sheet: 1/1
Date: 2023-11-29 Drawn By:	