An image is worth 16×16 words: Transformers for Image Recognition at Scale [2]

Jincheng Xu

2023141460134

March 23, 2026

ViT is the first work to prove that a pure Transformer can achieve state-of-the-art performance in image classification. ViT treats each image as a sequence of tokens and then feeds them to multiple Transformer layers to make the classification. [5]

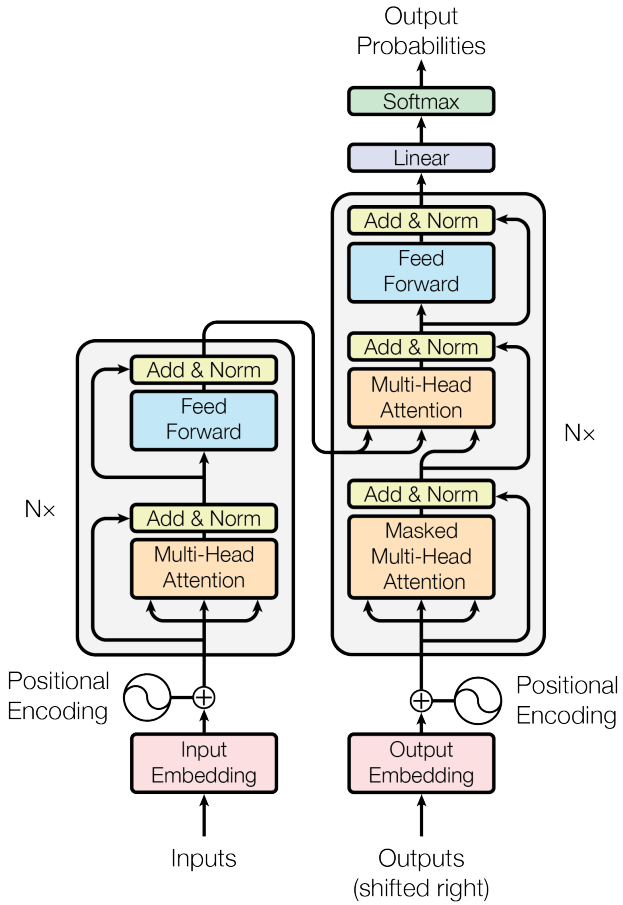

Figure: Transformer

Prediction in Conclusion

We are excited about the future of attention-based models and plan to apply them to other tasks. We plan to extend the Transformer to problems involving input and output modalities other than text and to investigate local, restricted attention mechanisms to efficiently handle large inputs and outputs such as images, audio and video. [3]

Motivation

- **Superiority of Transformer-based Model**
  - No sign of saturating performance
  - Computational efficiency
  - Scalability
- **Computer Vision**
  Convolutional architectures remain dominant

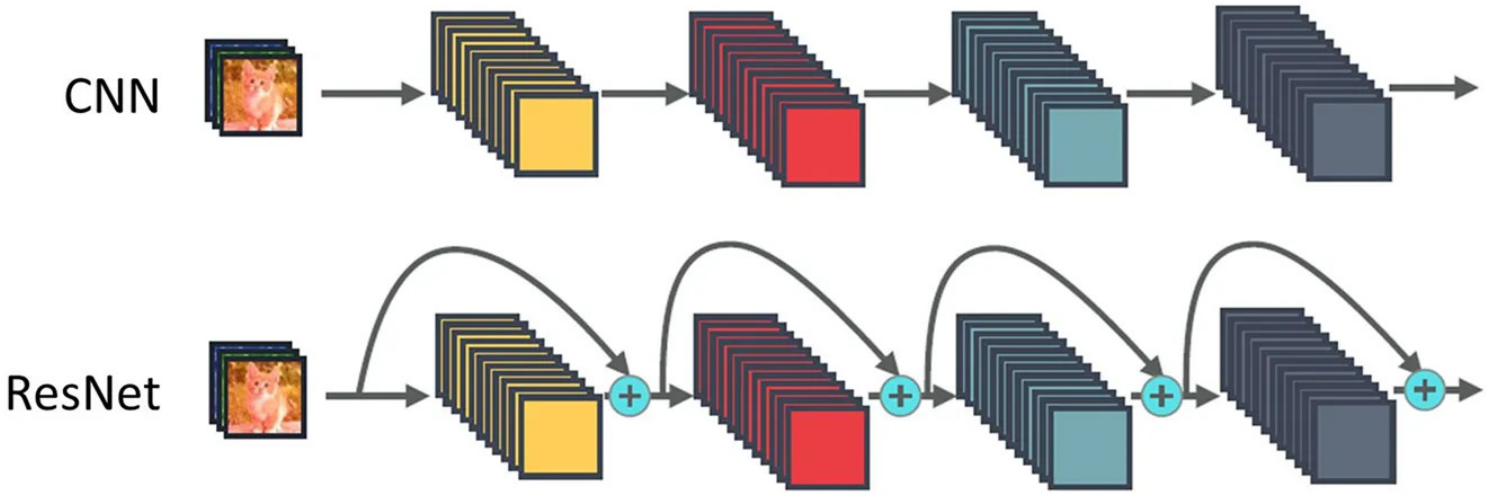

Figure: CNNs and ResNet

Related Work

1. Combining CNN-like architectures with self-attention [1]
2. Replacing the convolutions entirely with Transformers [4]

   Theoretically efficient,have not yet been scaled effectively on modern hardware accelerators

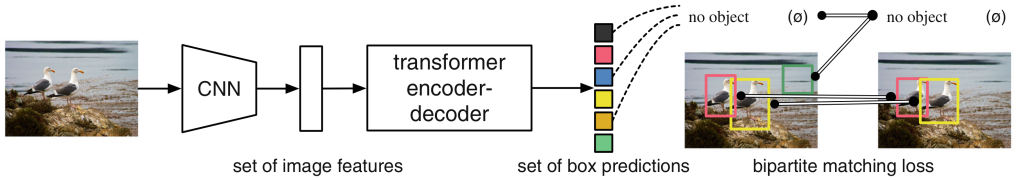

Figure: Hybrid structure

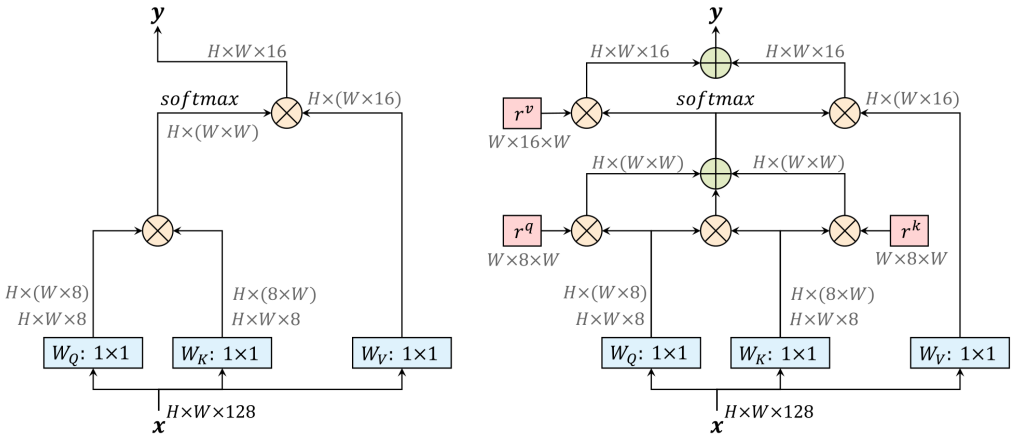

Figure: Entirely replace

Superiority of ViT

1. Pure transformer on image classification tasks with the fewest possible modifications
2. Large scale training trumps inductive bias:
   ViT approaches or beats state of the art on multiple image recognition benchmarks.
3. Large attention distance across image

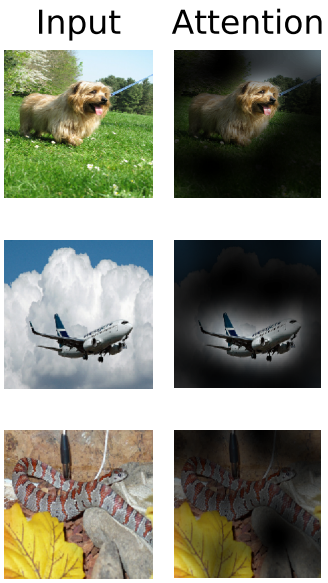

Figure: As depth increases, attention distance increases for all heads. In the second half of the network, most heads attend widely across tokens.

Table: Model Performance Across Datasets and Training Efficiency

Dataset	Ours-JFT (ViT-H/14)	Ours-JFT (ViT-L/16)	Ours-I21k (ViT-L/16)	BiT-L (ResNet152x4)
ImageNet	88.55±0.04	87.76±0.03	85.30±0.02	87.54±0.02
ImageNet ReaL	90.72±0.05	90.54±0.03	88.62±0.05	90.54
CIFAR-10	99.50±0.06	99.42±0.03	99.15±0.03	99.37±0.06
CIFAR-100	94.55±0.04	93.90±0.05	93.25±0.05	93.51±0.08
Oxford-IIIT Pets	97.56±0.03	97.32±0.11	94.67±0.15	96.62±0.23
Oxford Flowers-102	99.68±0.02	99.74±0.00	99.61±0.02	99.63±0.03
VTAB (19 tasks)	77.63±0.23	76.28±0.46	72.72±0.21	76.29±1.70
TPUv3-core-days	2.5k	0.68k	0.23k	9.9k

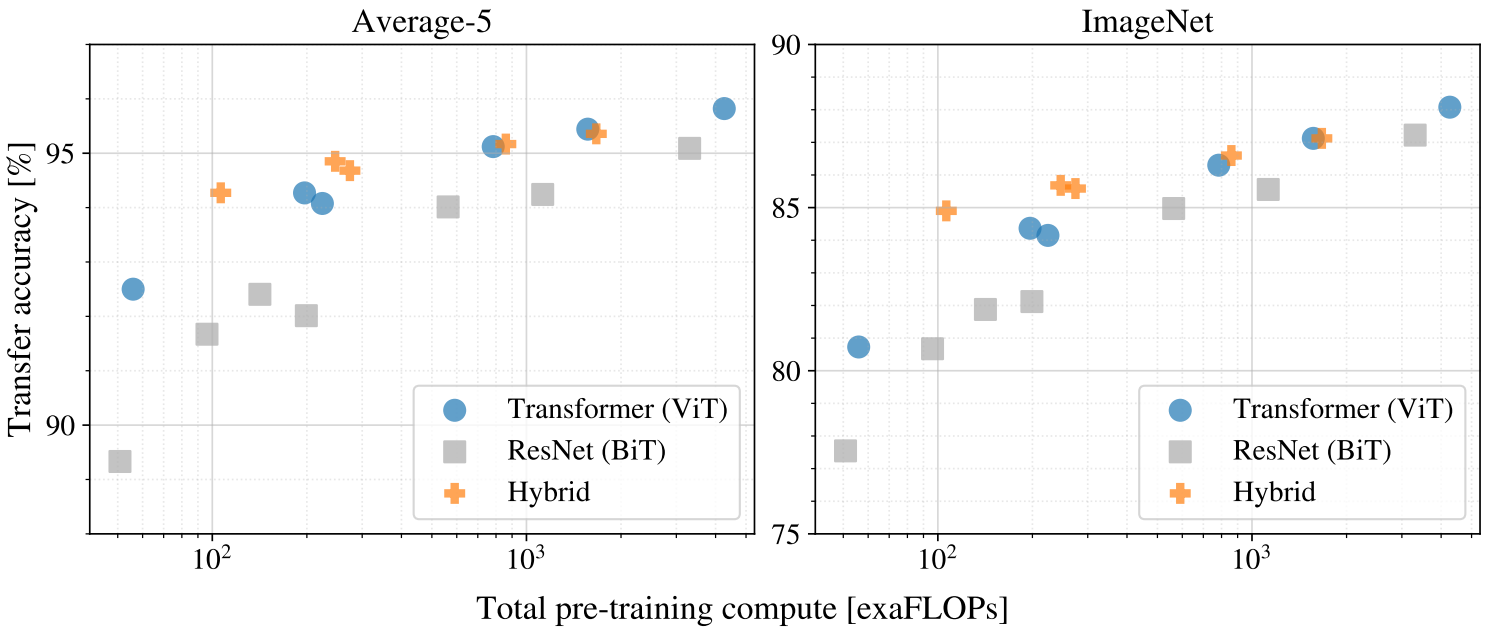

Figure: Performance versus pre-training compute for different architectures: Vision Transformers, ResNets, and hybrids.

Structure

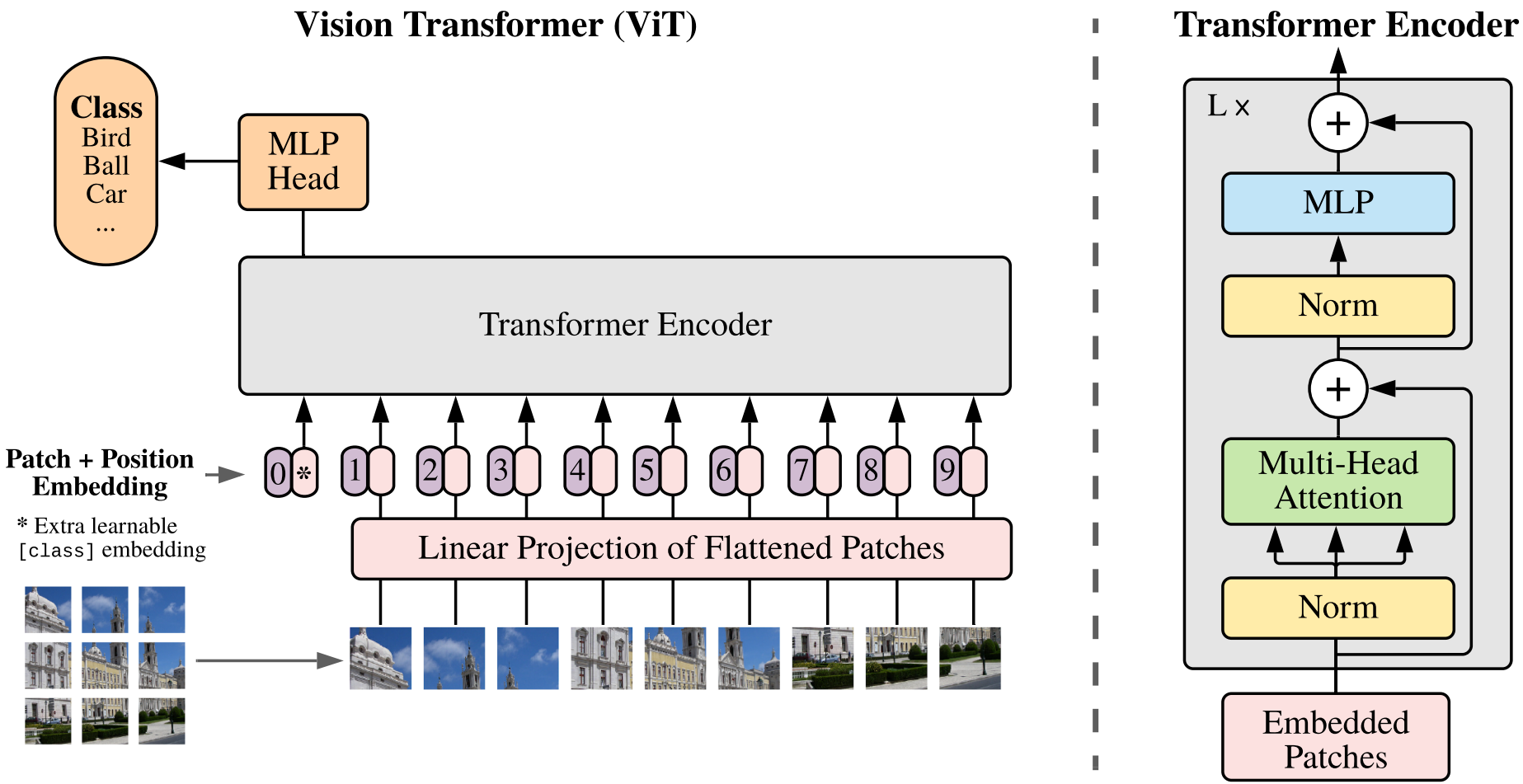

Figure: Model overview

Method

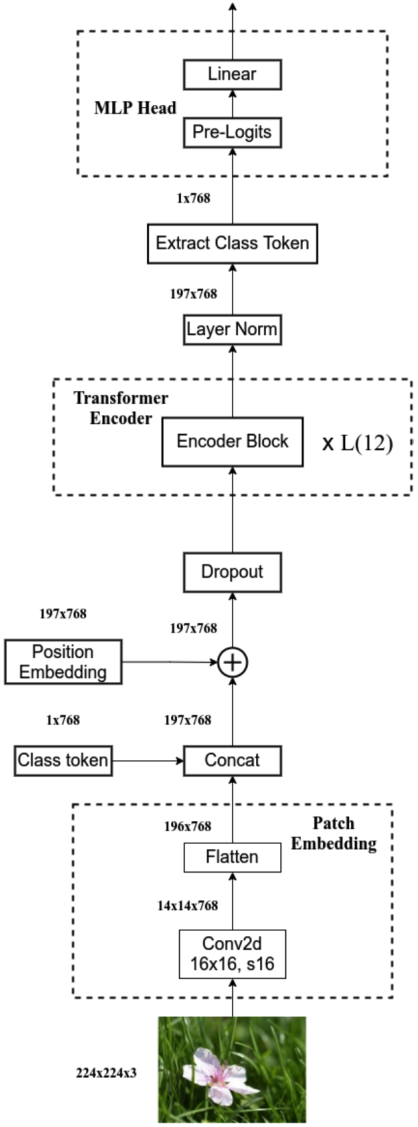

Data Preprocessing

1. Split an image into fixed-size patches
2. Flatten the patches
3. Linearly embed each of them with a trainable linear projection
4. Adding an extra learnable "classification token" to the sequence
5. Add position embeddings

$$\mathbf{z}_0 = \left[\mathbf{x}_{\text{class}}; \mathbf{x}_p^1\mathbf{E}; \cdots ; \mathbf{x}_p^N\mathbf{E}\right] + \mathbf{E}_{\text{pos}}$$

$$\mathbf{E} \in \mathbb{R}^{(P^2 \cdot C) \times D}, \mathbf{E}_{\text{pos}} \in \mathbb{R}^{(N+1) \times D}$$

Method

Inductive bias

- In ViT, the two-dimensional neighborhood structure is used very sparingly:
  - In the beginning of the model by cutting the image into patches and at fine-tuning time for adjusting the position embeddings for images of different resolution.

Pos. Emb.	Default/Stem	Every Layer	Every Layer-Shared
No Pos. Emb.	0.61382	N/A	N/A
1-D Pos. Emb.	0.64206	0.63964	0.64292
2-D Pos. Emb.	0.64001	0.64046	0.64022
Rel. Pos. Emb.	0.64032	N/A	N/A

Limitation

- Performance decreases when processing different resolution image

  The Vision Transformer can handle arbitrary sequence lengths (up to memory constraints), however, the pre-trained position embeddings may no longer be meaningful. [2] SegFormer comprises a novel hierarchically structured Transformer encoder which outputs multiscale features. It does not need positional encoding, thereby avoiding the interpolation of positional codes which leads to decreased performance when the testing resolution differs from training. [5]

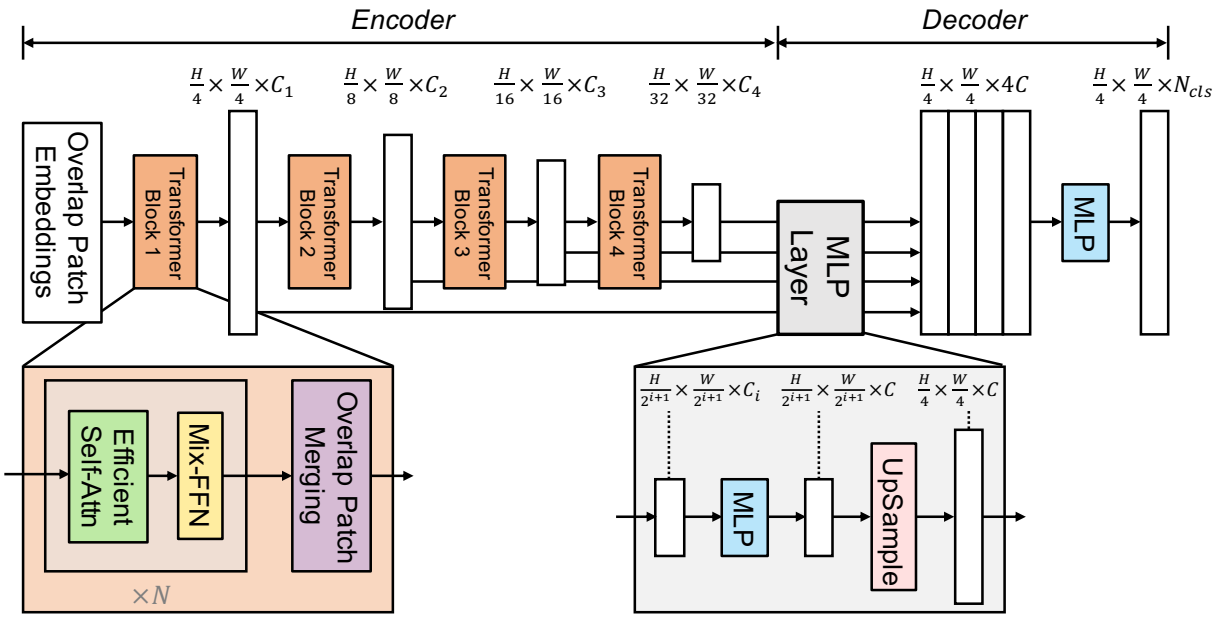

Figure: SegFormer

Limitation

- Reduced image-specific inductive bias

  Vision Transformer has much less image-specific inductive bias than CNNs.In CNNs, locality, two-dimensional neighborhood structure, and translation equivariance are baked into each layer throughout the whole model. [2]

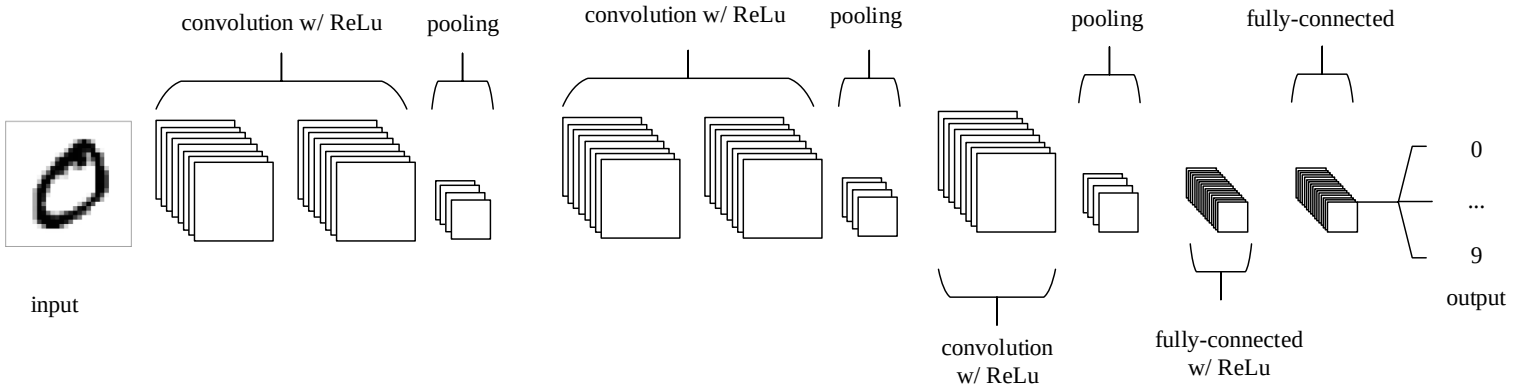

Figure: CNN

References I

Thanks for Listening!

Nicolas Carion, Francisco Massa, Gabriel Synnaeve, Nicolas Usunier, Alexander Kirillov, and Sergey Zagoruyko.
End-to-end object detection with transformers, 2020.

Alexey Dosovitskiy, Lucas Beyer, Alexander Kolesnikov, Dirk Weissenborn, Xiaohua Zhai, Thomas Unterthiner, Mostafa Dehghani, Matthias Minderer, Georg Heigold, Sylvain Gelly, Jakob Uszkoreit, and Neil Houlsby.
An image is worth 16x16 words: Transformers for image recognition at scale, 2021.

Ashish Vaswani, Noam Shazeer, Niki Parmar, Jakob Uszkoreit, Llion Jones, Aidan N Gomez, Łukasz Kaiser, and Illia Polosukhin.
Attention is all you need.
Advances in neural information processing systems, 30, 2017.

Huiyu Wang, Yukun Zhu, Bradley Green, Hartwig Adam, Alan Yuille, and Liang-Chieh Chen.
Axial-deeplab: Stand-alone axial-attention for panoptic segmentation, 2020.

Enze Xie, Wenhai Wang, Zhiding Yu, Anima Anandkumar, Jose M Alvarez, and Ping Luo.
Segformer: Simple and efficient design for semantic segmentation with transformers.
Advances in neural information processing systems, 34:12077–12090, 2021.

`ViTLecturebyLiMu https://www.bilibili.com/video/BV15P4y137jb?vd_source=47ea6e11f644e8fae50997c63140dd52`