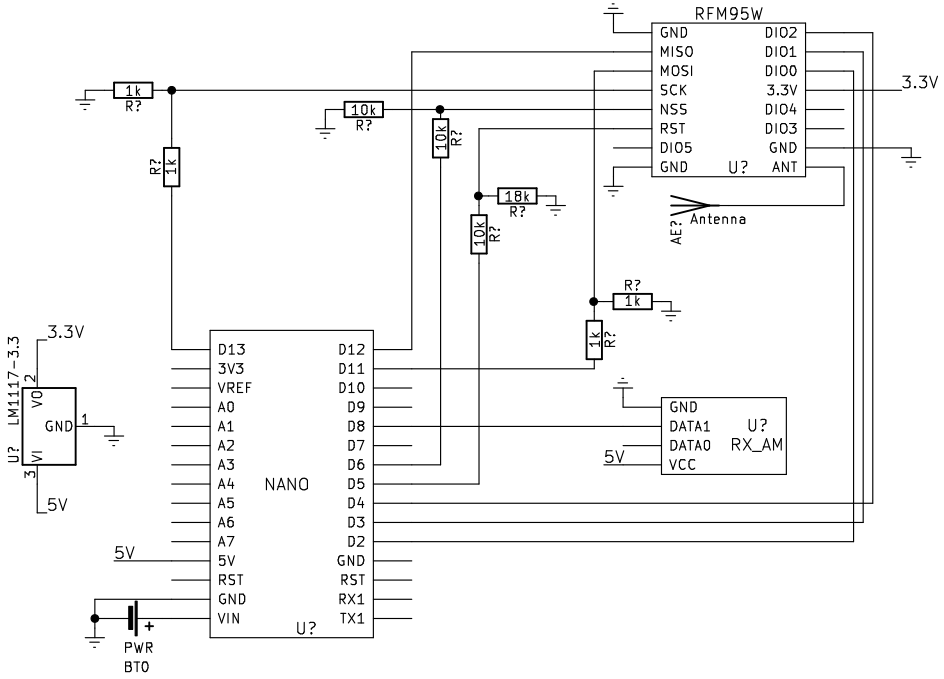

Sheet: /
File: central.sch

Title: Central

Size: A4	Date: 2018-03-21	**Rev: v1**
KiCad E.D.A. kicad 4.0.7-e2-637658ubuntu16.04.1		Id: 1/1