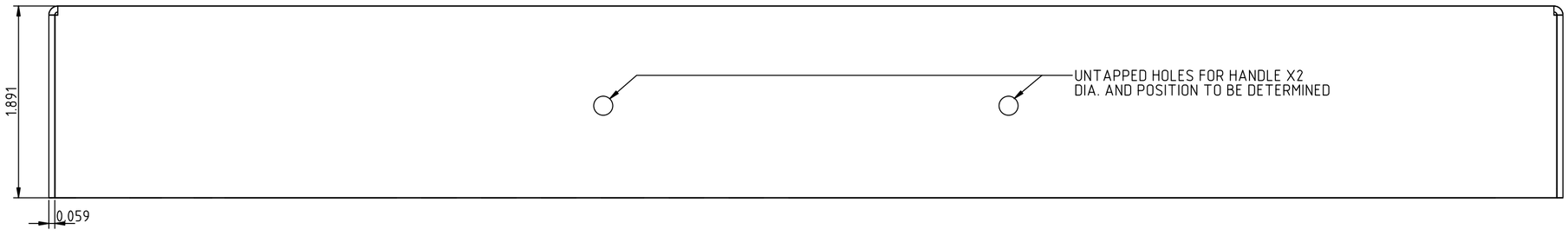
1.891
UNTAPPED HOLES FOR HANDLE X2
DIA. AND POSITION TO BE DETERMINED
0.059

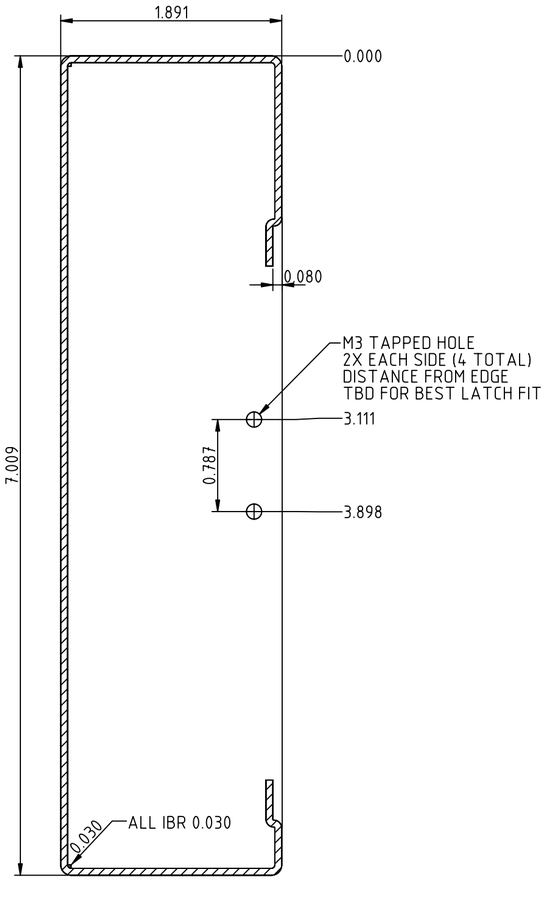
1.891
0.000
0.080
M3 TAPPED HOLE
2X EACH SIDE (4 TOTAL)
DISTANCE FROM EDGE
TBD FOR BEST LATCH FIT
3.111
0.787
3.898
7.009
0.030
ALL IBR 0.030

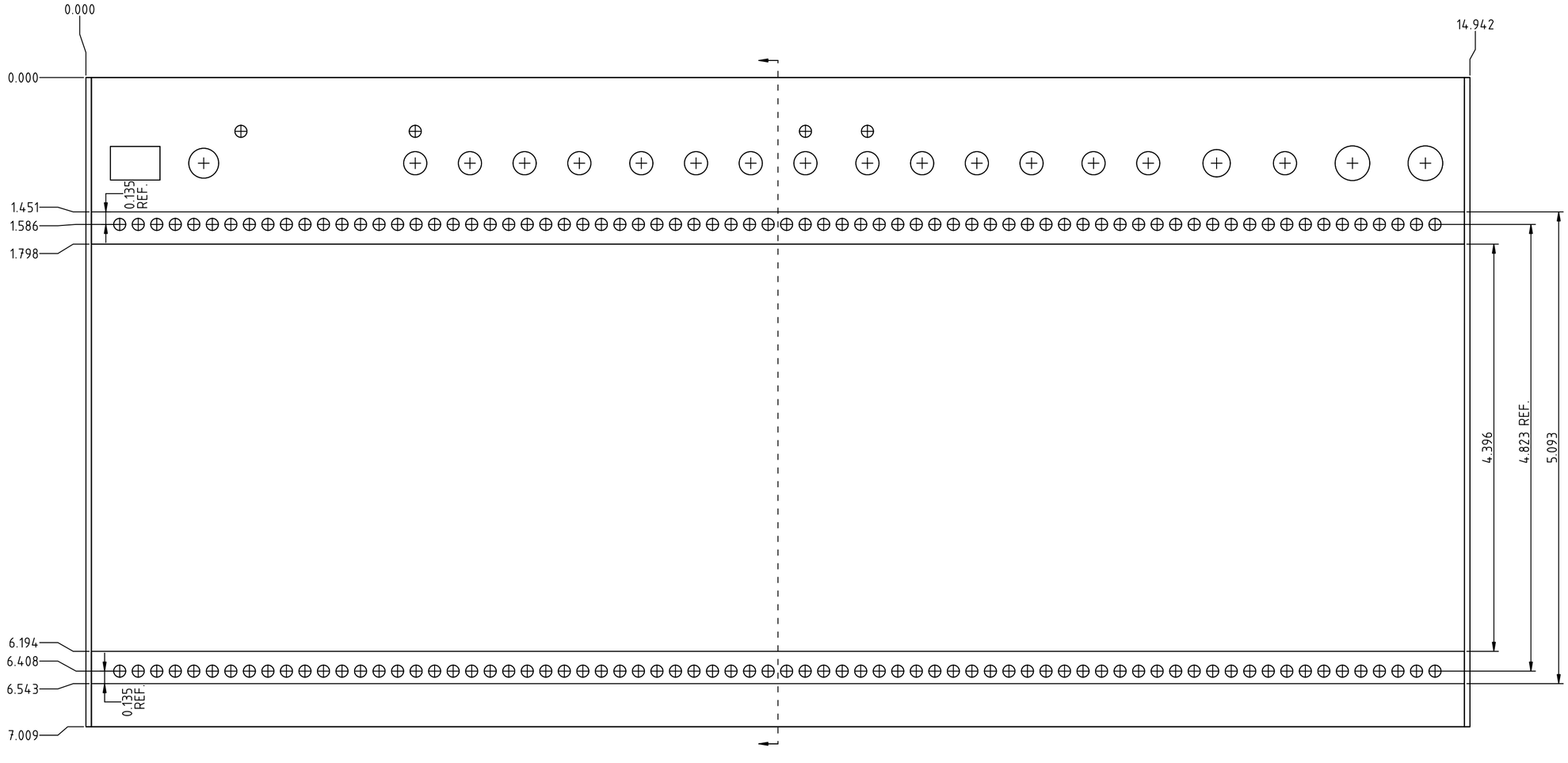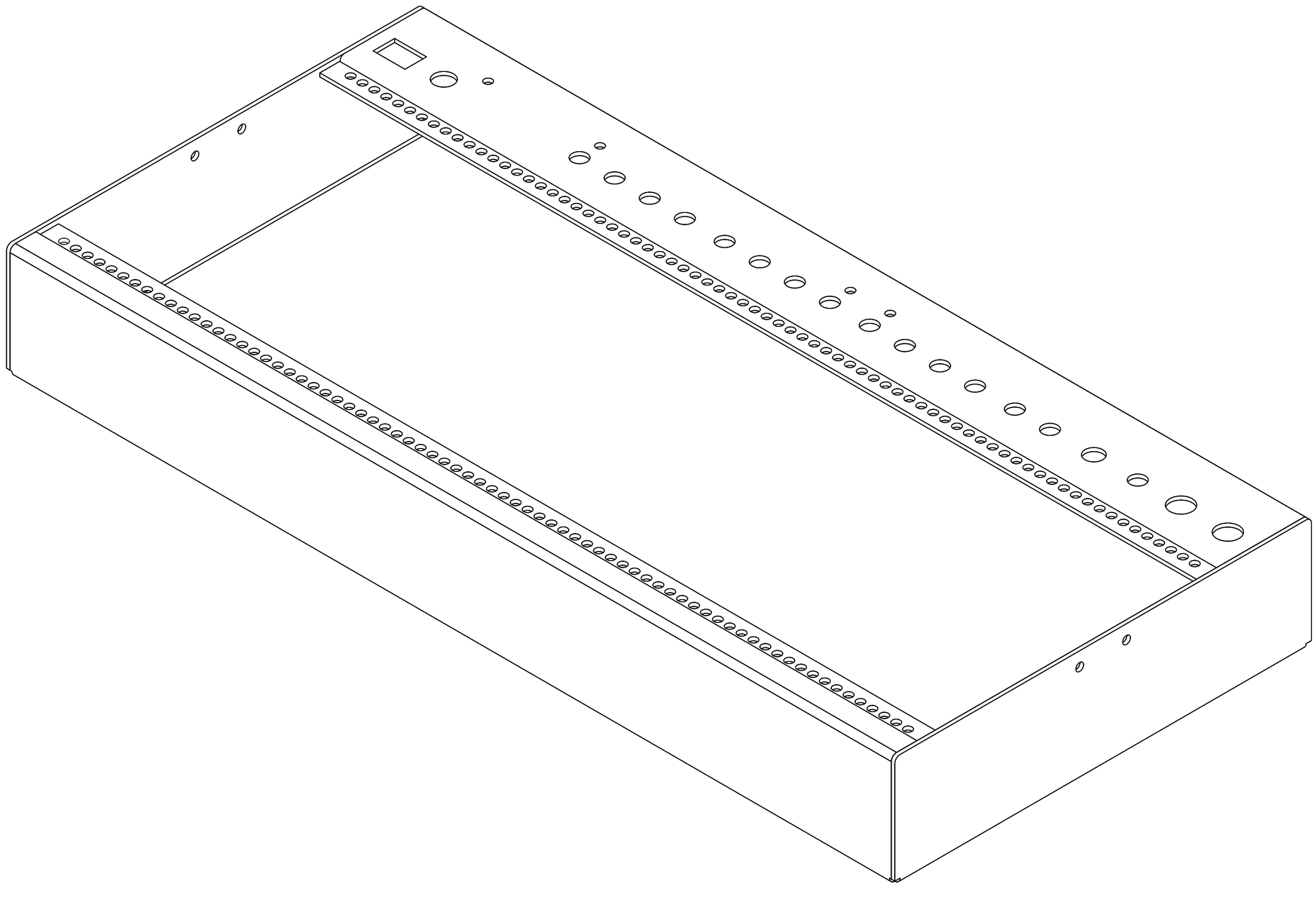
0.000
14.942
0.000
0.135
REF.
1.451
1.586
1.798
4.396
4.823 REF.
5.093
6.194
6.408
6.543
0.135
REF.
7.009