NOISE

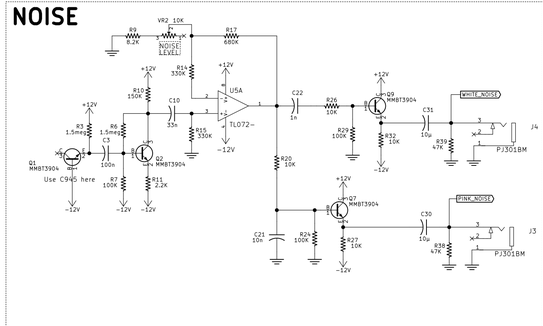

SAMPLE & HOLD

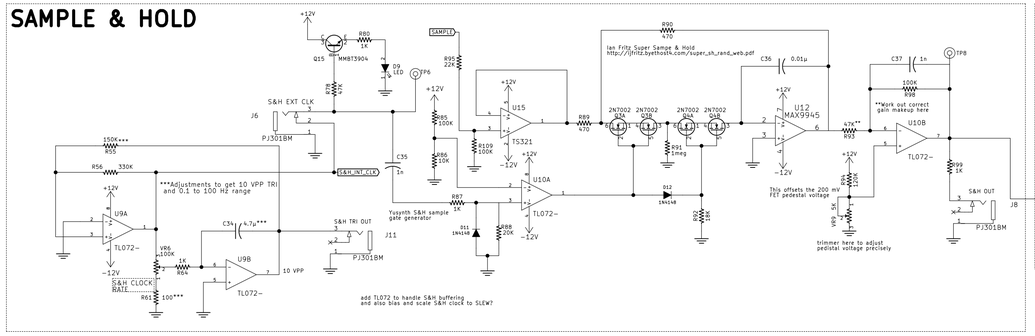

SLEW

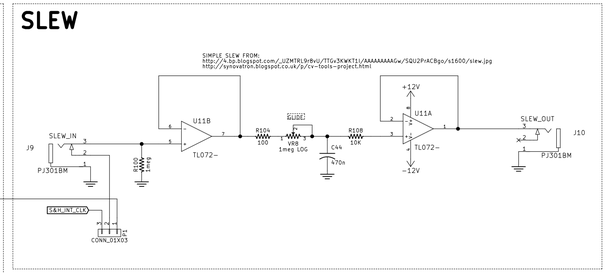

LFO

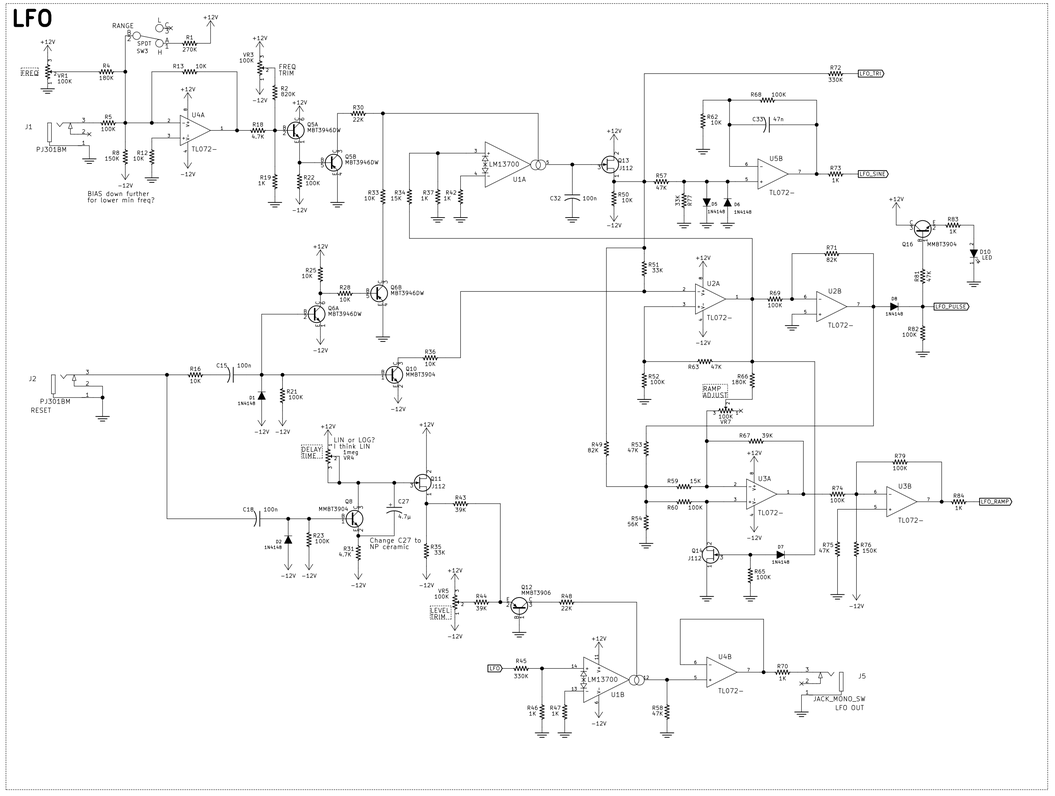

SWITCHING LOGIC

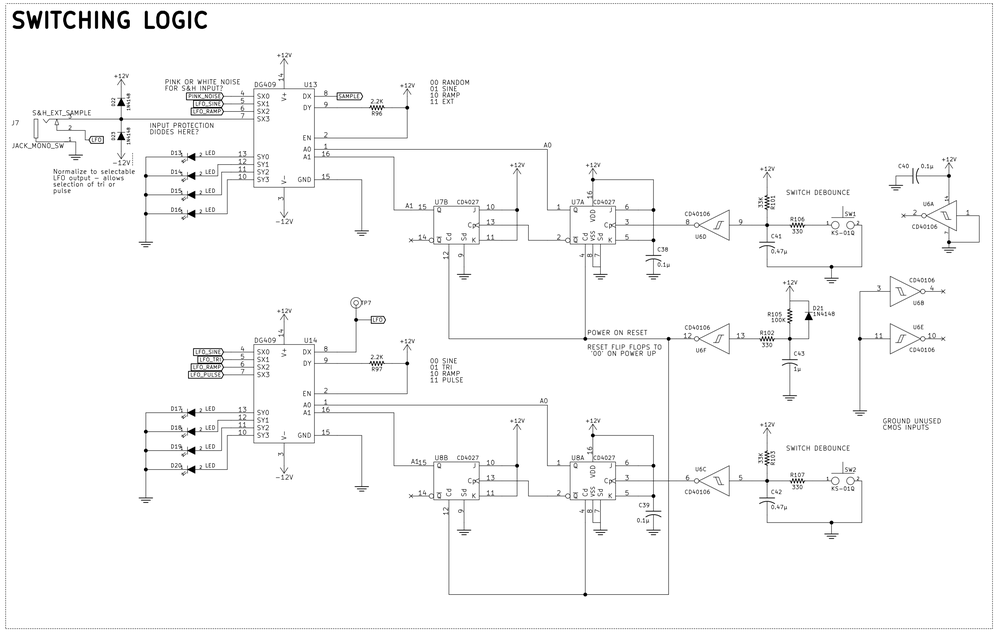

POWER

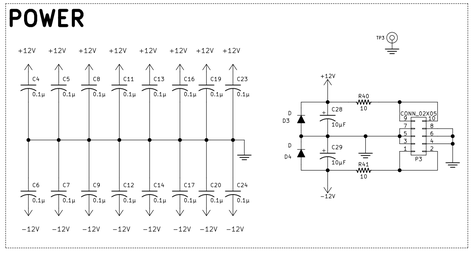

850 LFO S&H NOISE SLEW