Weather Forecasting Based on LSTM/ARIMA

Group07 MinsiLu, Cheng Peng, Dejin Kong, Hanli Wang, Qi Tian

25/8/2022

Weather

Machine Learning

CONTENTS

01 Introduction

Topic
Data processing

02 Model

ARIMA
LSTM
Comparison

Topic

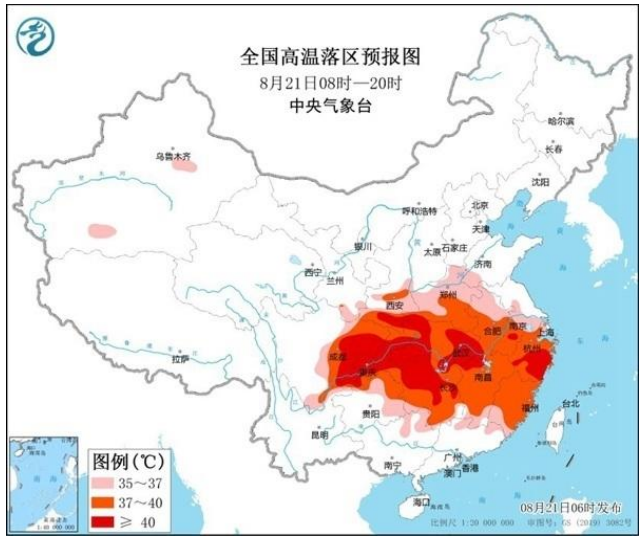

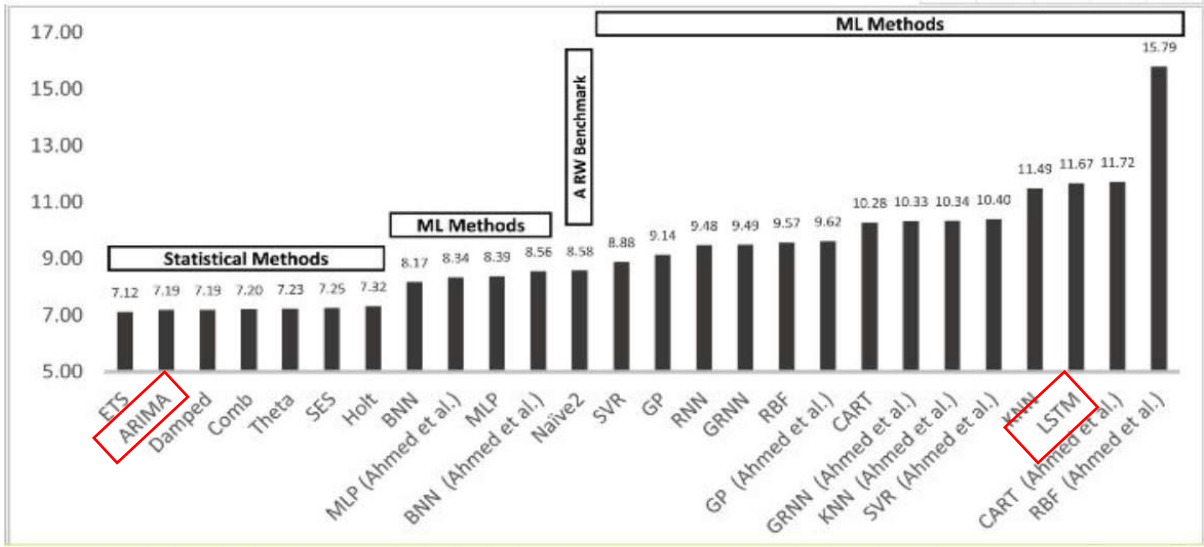

Bar Chart Comparing Model Performance (sMAPE) for One-Step Forecasts, Source : https://journals.plos.org/plosone/article?id=10.1371/journal.pone.0194889

华为云社区
bbs.huaweicloud.com

Global Warming

This year, the highest temperature in some southern cities even exceeded 40 degrees.

ARIMA

Autoregressive integrated moving average model, Applicable to non-stationary time series, its difference process can effectively convert non-stationary data to stationary data

LSTM

Long short-term memory network, Suitable for processing and forecasting events with long intervals in time series

Data processing

Data missing：6 entries

```
DatetimeIndex: 4561 entries, 2010-01-01 to 2022-06-27
Data columns (total 8 columns):
 #   Column          Non-Null Count  Dtype
---  ------          --------------  -----
 0   Ave.T           4555 non-null   float64
 1   Max.T           4555 non-null   float64
```

```
# 插值
data.interpolate(method='time',limit_direction='both',inplace=True)

# 去除重复值
data.drop_duplicates(inplace=True)
```

```
DatetimeIndex: 4561 entries, 2010-01-01 to 2022-06-27
Data columns (total 8 columns):
 #   Column          Non-Null Count  Dtype
---  ------          --------------  -----
 0   Ave.T           4561 non-null   float64
 1   Max.T           4561 non-null   float64
```

Data source: www.meteomanz.com

standardization：

Make different feature variables have the same scale. Accelerated convergence when using gradient descent.

$$x^* = \frac{x - \mu}{\sigma}$$

The processed data is a standard normal distribution.

ARIMA

Difference: Find the difference between the time series at time t and t-1 to form a new series

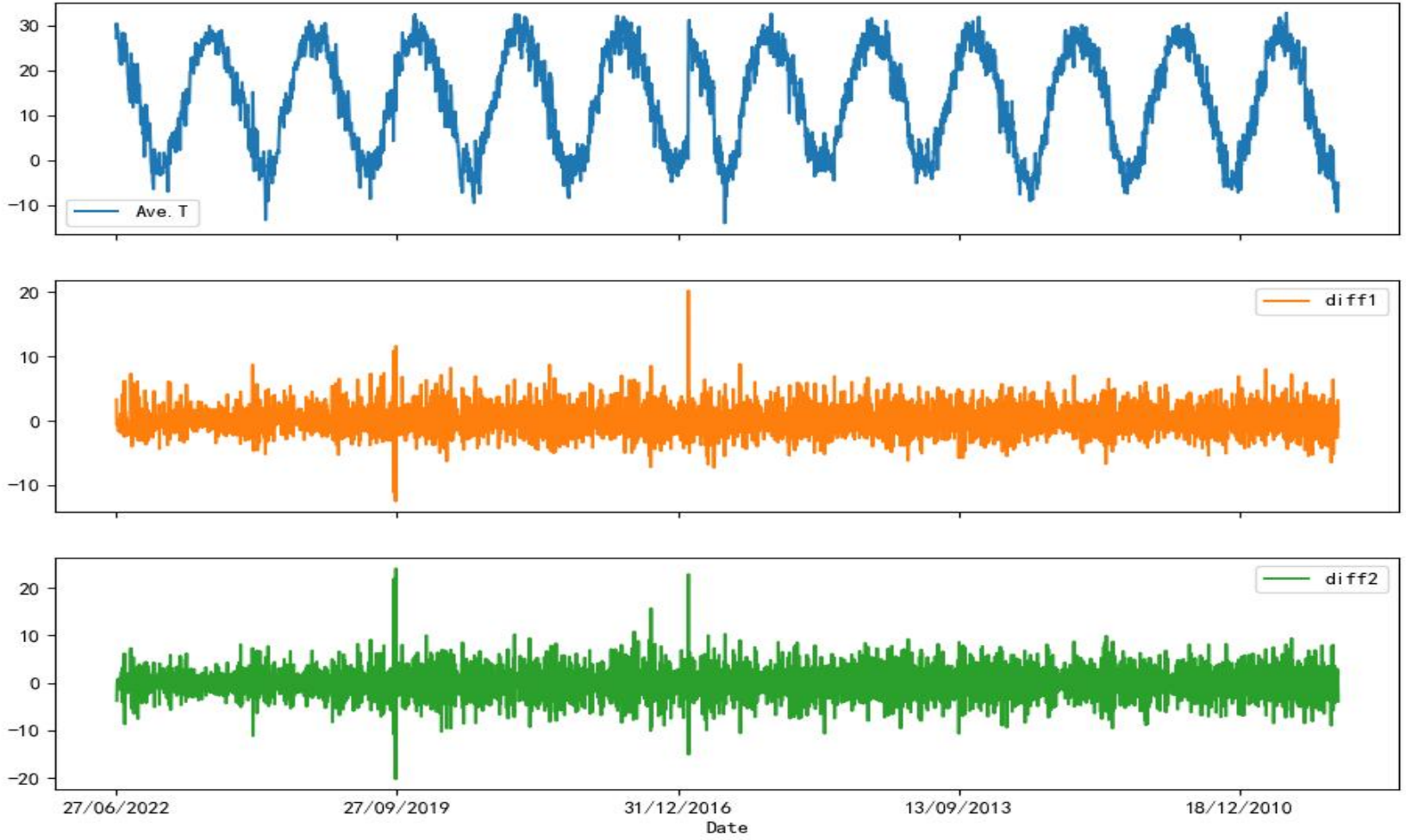

ARIMA

Autoregressive Model (AR):

Describe the relationship between the current value and the historical value, and use the historical time data of the variable itself to predict itself.

$$y_t = \sum_{i=1}^{p} \alpha_i x_{t-i} + \omega_t$$

ARIMA

Moving Average model（MA）：

Describe the relationship between the current value and the error, and use the linear combination of the error to predict itself.

$$y_t = \omega_t + \sum_{t=1}^{p} \beta_i \omega_{t-i}$$

The starting point of MA is to observe the oscillation of the residuals by combining the residual terms, each value of yt can be thought of as a weighted moving average of the past few forecast errors

ARIMA

Autoregressive Integrated Moving Average Model

The model established by transforming the non-stationary time series into a stationary time series and then regressing the dependent variable only on its lag value and the present and subsequent values of the random error term.

$$y_t = \mu + \sum_{i=1}^{p} \gamma_i y_{t-i} + \epsilon_t + \sum_{i=1}^{q} \theta_i \epsilon_{t-i}$$

Key: determine the 3 parameters p, d, q

ARIMA

ACF（autocorrelation function）
PACF（partial autocorrelation function）

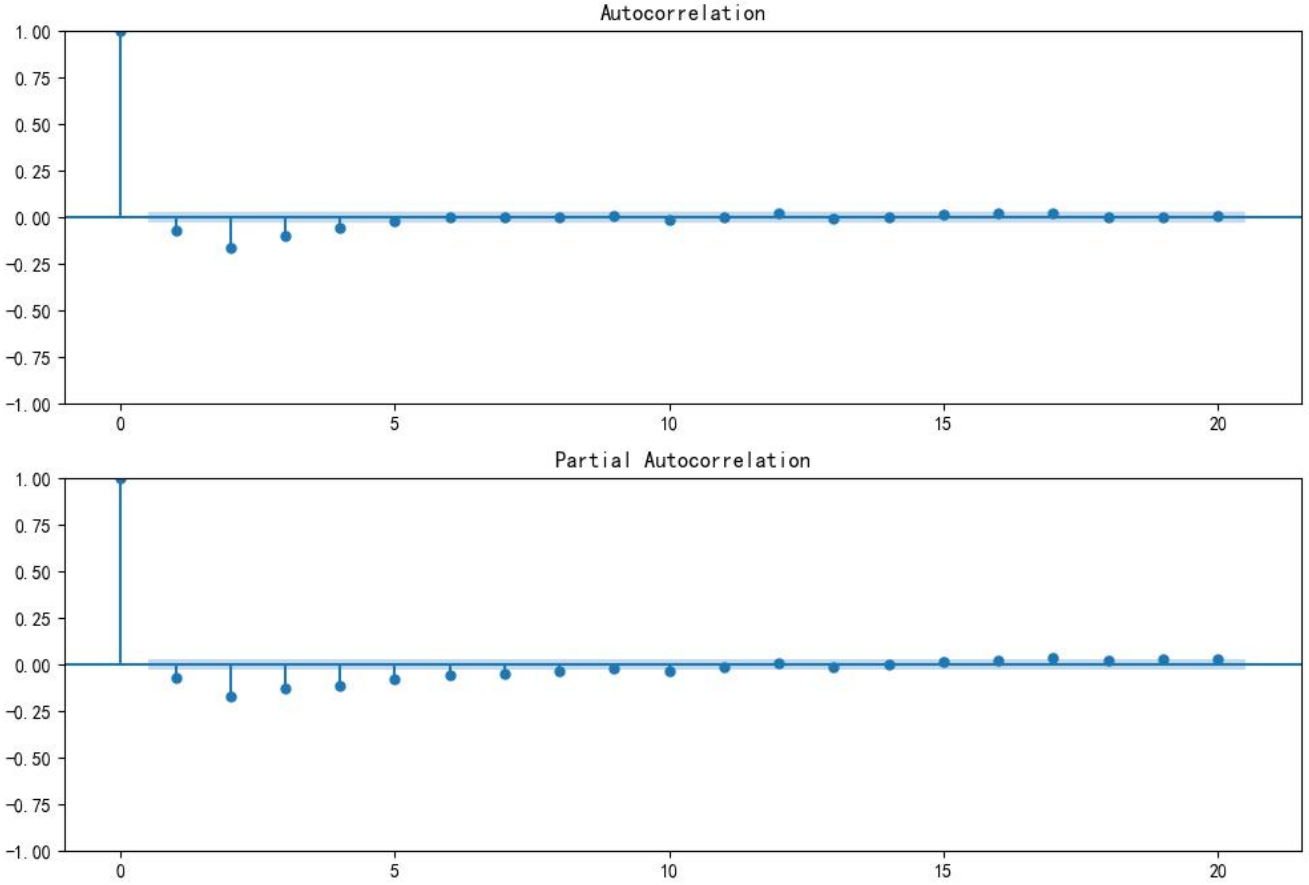

ACF also incorporates the effects of other variables

PACF is a strict association between two variables

ARIMA

- p looks at the PACF diagram, q looks at the ACF diagram (AIC, BIC test)

- Model Checking: Residuals Test

  Are the residuals of the ARIMA model normally distributed with a mean of 0 and a constant variance?

  QQ plot: linear or normal distribution

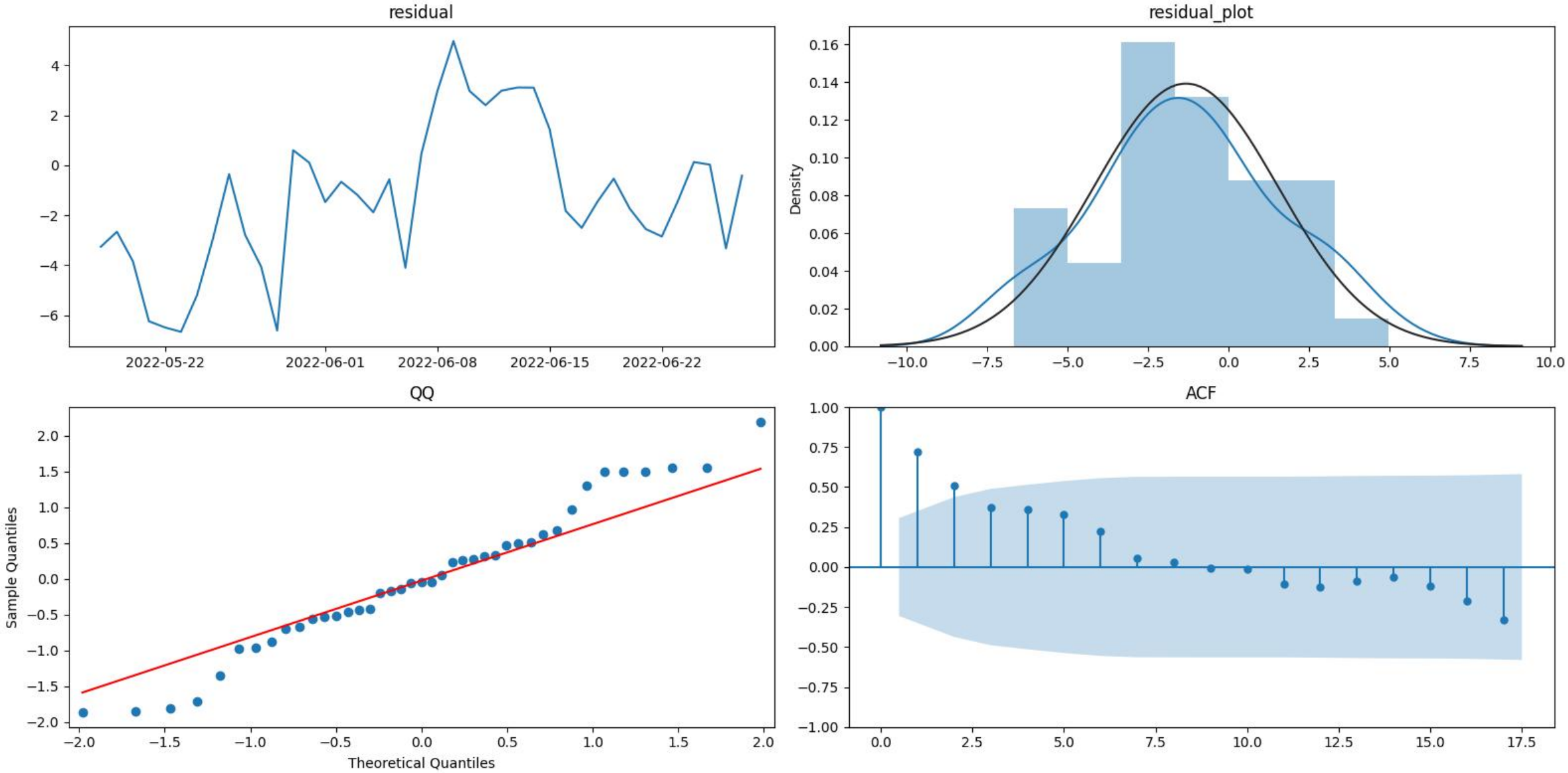
residual
4
2
0
−2
−4
−6
2022-05-22
2022-06-01
2022-06-08
2022-06-15
2022-06-22
residual_plot
Density
0.16
0.14
0.12
0.10
0.08
0.06
0.04
0.02
0.00
−10.0
−7.5
−5.0
−2.5
0.0
2.5
5.0
7.5
10.0
QQ
Sample Quantiles
Theoretical Quantiles
2.0
1.5
1.0
0.5
0.0
−0.5
−1.0
−1.5
−2.0
ACF
1.00
0.75
0.50
0.25
0.00
−0.25
−0.50
−0.75
−1.00
0.0
2.5
5.0
7.5
10.0
12.5
15.0
17.5

Results

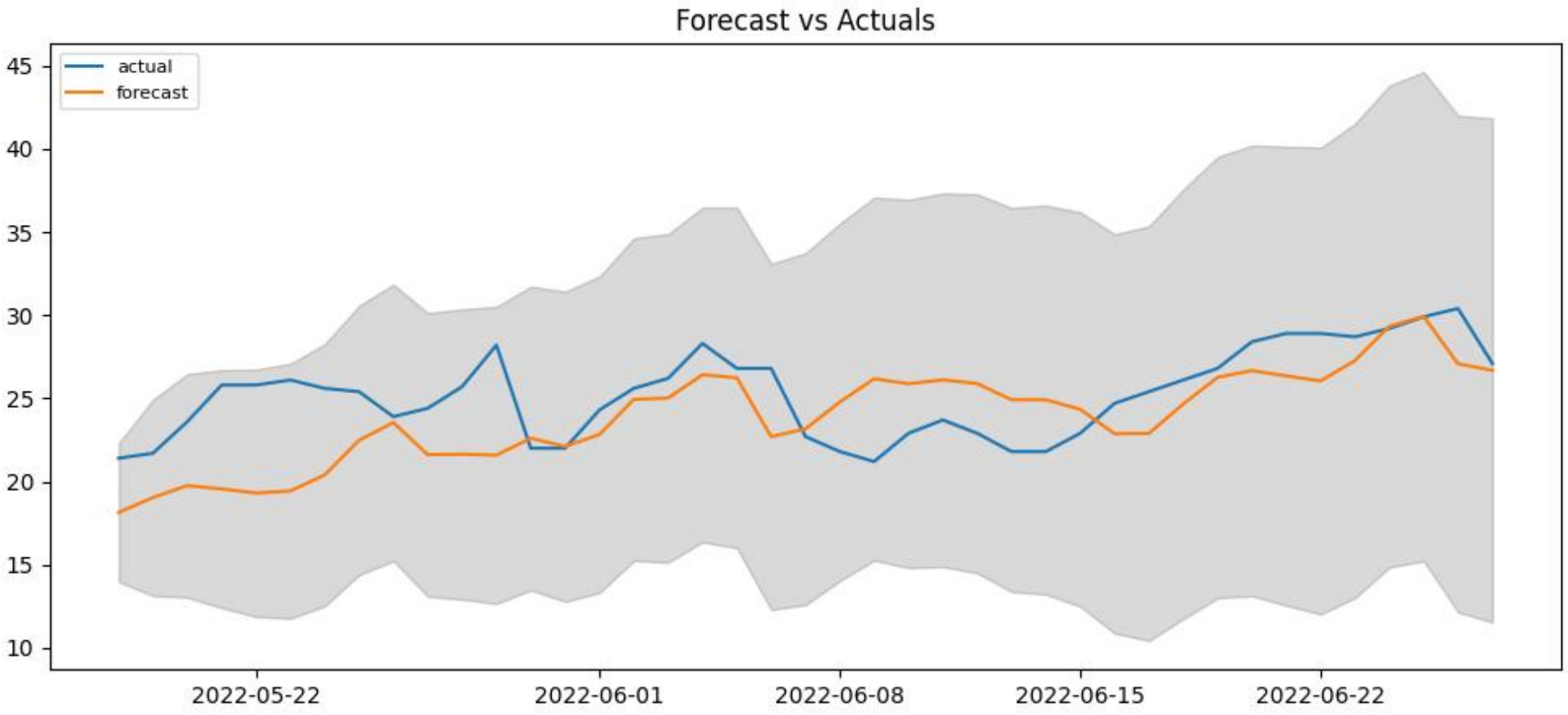
Forecast vs Actuals
actual
forecast
45
40
35
30
25
20
15
10
2022-05-22
2022-06-01
2022-06-08
2022-06-15
2022-06-22

LSTM

Long Short-Term Memory

Forget gate: decide how much C_{t-1} retains

Input Gate: Determines what information is stored in the cell state C_t

σ layer - input gate layer: decides what values to update

tanh layer: creates a new candidate $\tilde{C}_t$, which is added to the state

Forget gate:

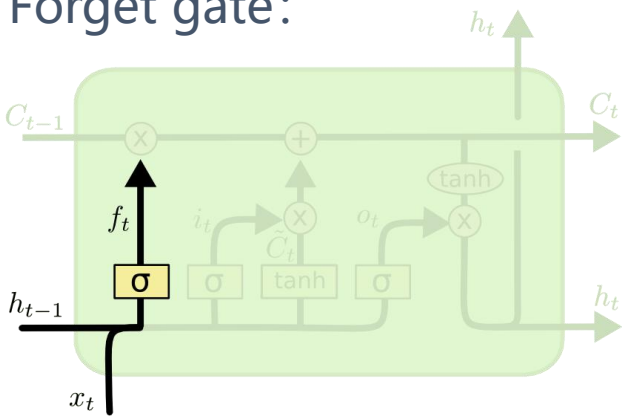

$$f_t = \sigma\left(W_f \cdot [h_{t-1}, x_t] \ + \ b_f\right)$$

Input Gate:

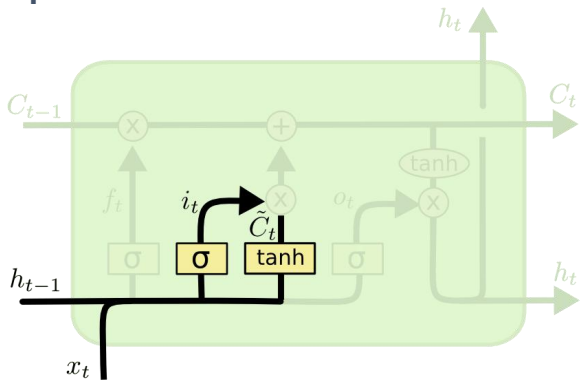

$$i_t = \sigma\left(W_i \cdot [h_{t-1}, x_t] \ + \ b_i\right)$$

$$\tilde{C}_t = \tanh(W_C \cdot [h_{t-1}, x_t] \ + \ b_C)$$

LSTM

Long Short-Term Memory

Cell state: C_{t-1} is updated to C_t

Output gate: determines what information is output

Status update:

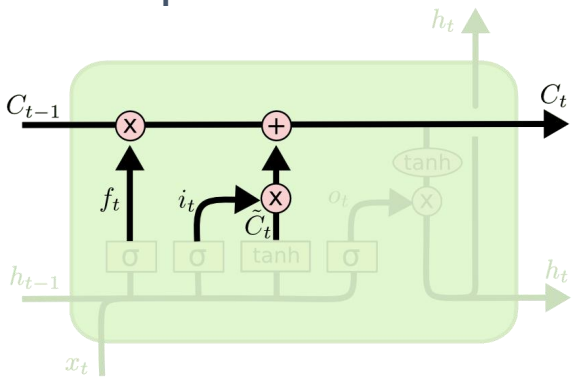

$$C_t = f_t * C_{t-1} + i_t * \tilde{C}_t$$

Output gate:

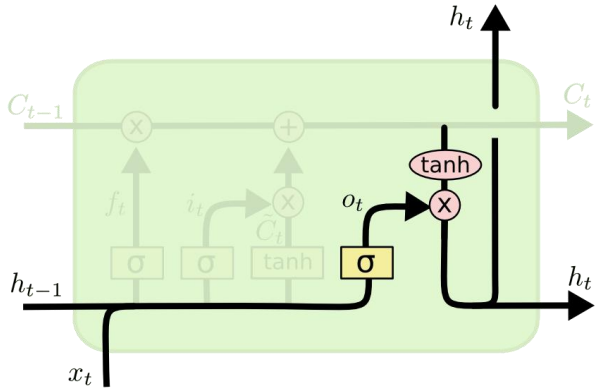

$$o_t = \sigma\left(W_o\left[h_{t-1}, x_t\right] + b_o\right)$$

$$h_t = o_t * \tanh\left(C_t\right)$$

LSTM_loss

epochs = 200

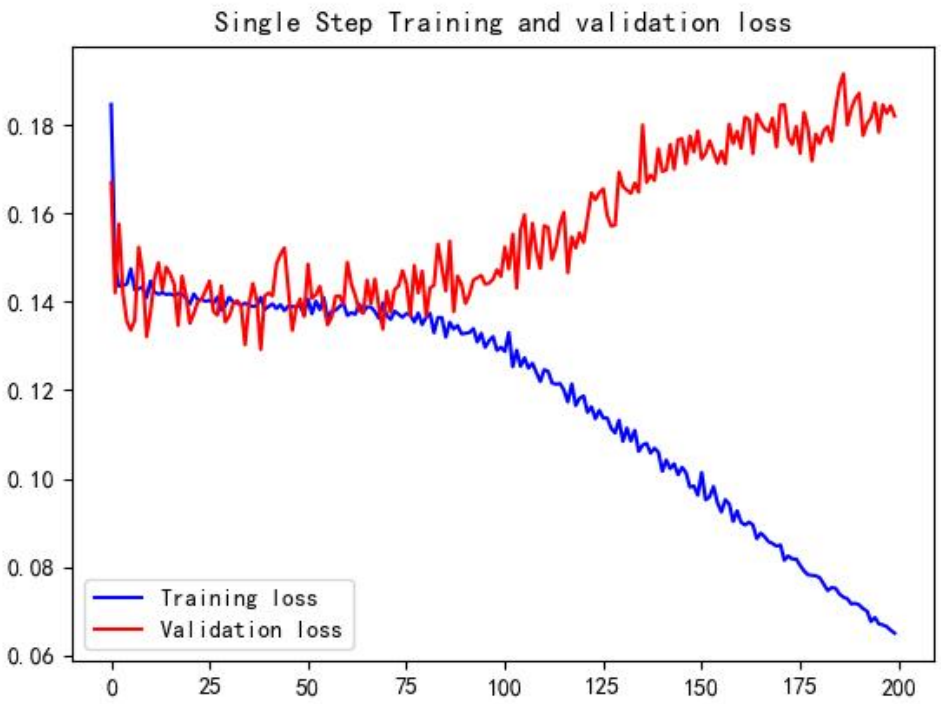

epochs = 50

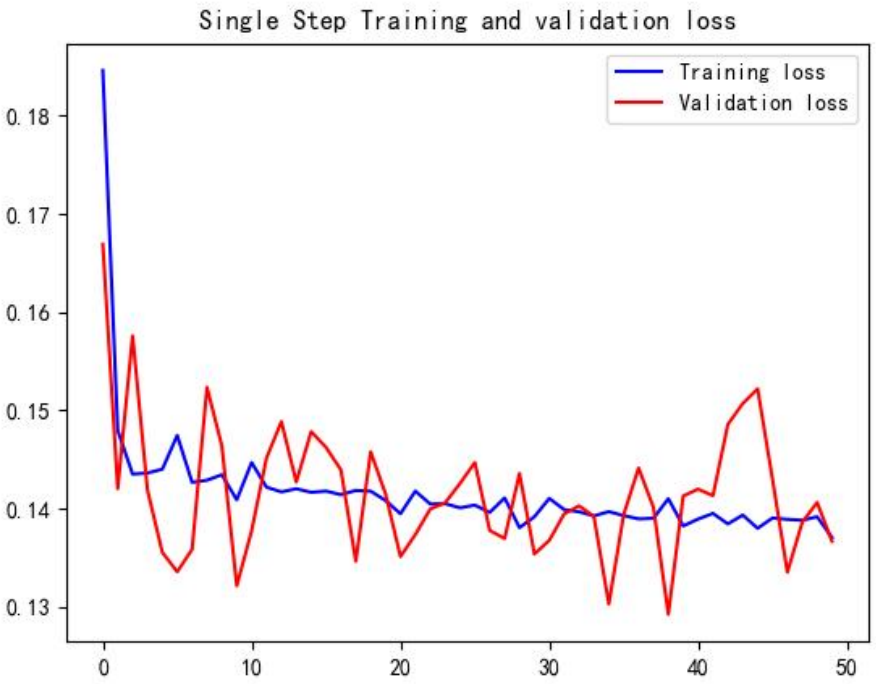

LSTM_results

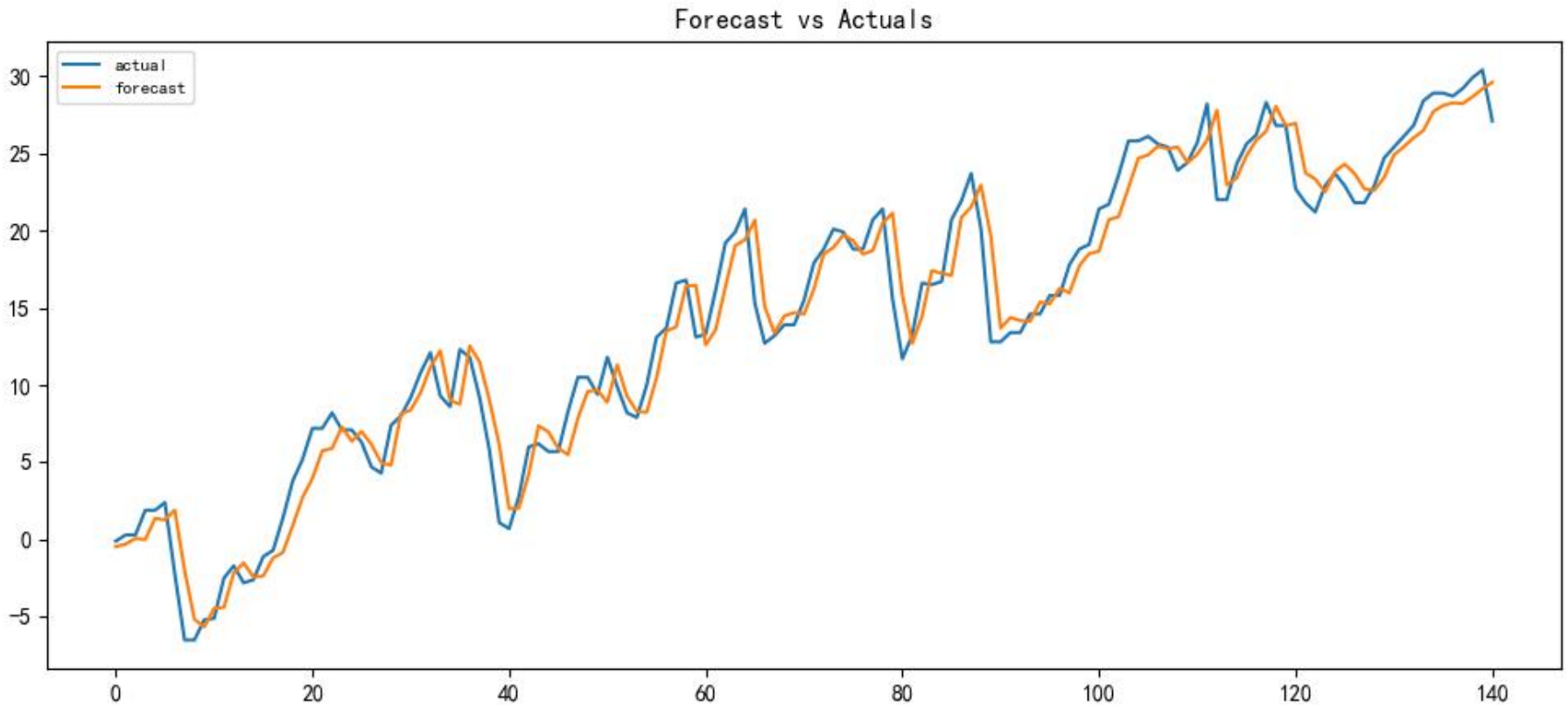

LSTM_results

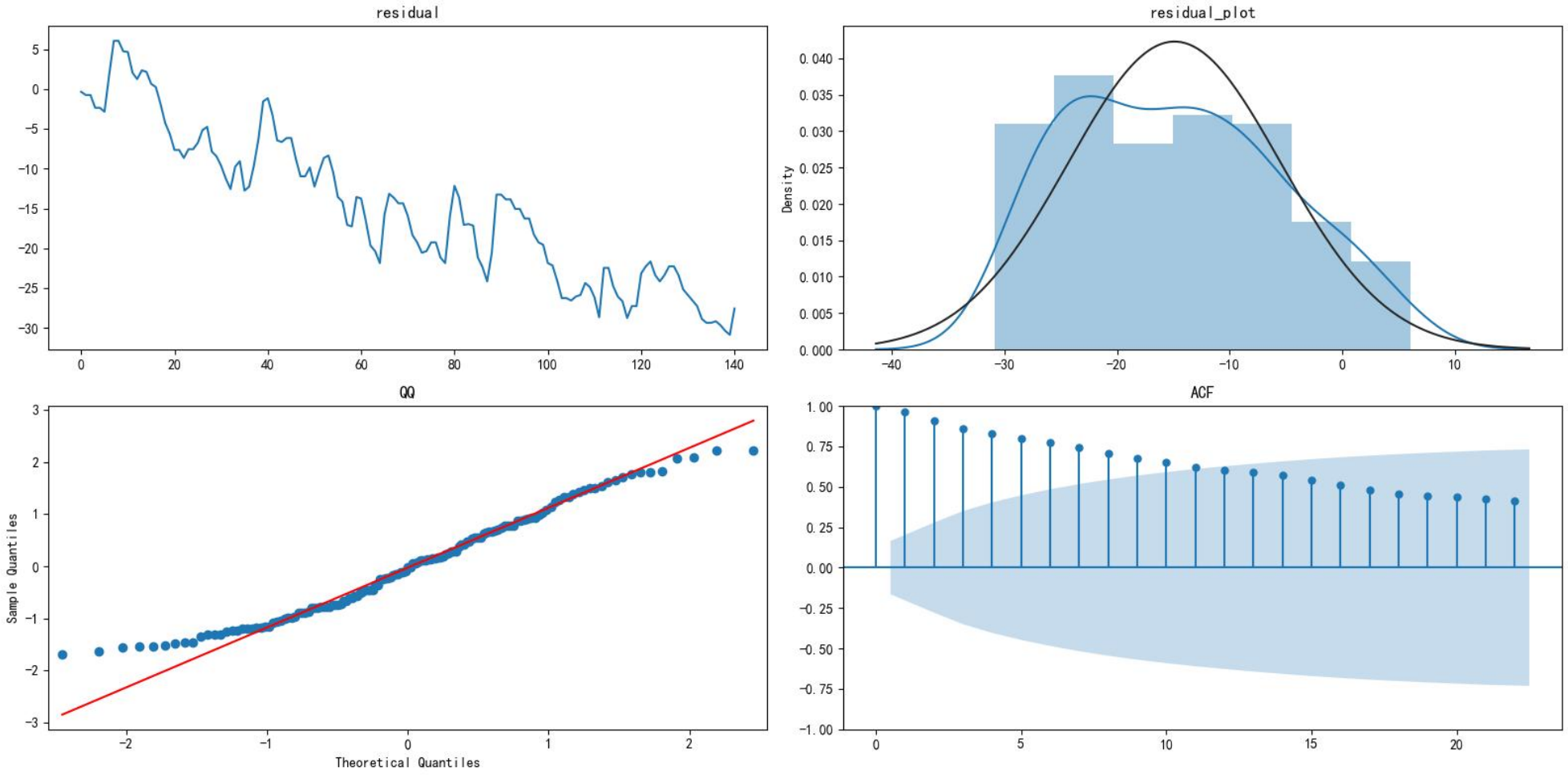

Comparison

ARIMA

{'MSE': 9.969345864182324,

'RMSE': 3.157427095624272,

'MAE': 2.559141936706577,

'MAPE': 0.10267555639458789}

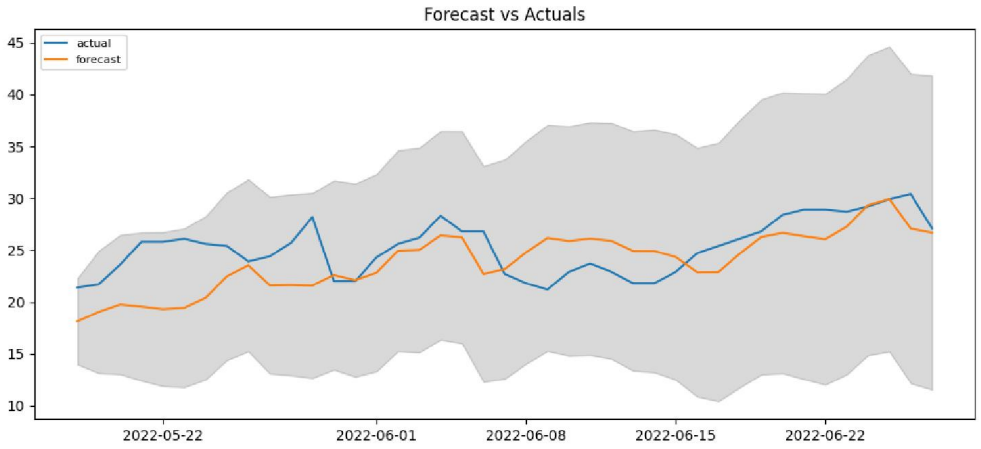

LSTM

{'MSE': 2.881874188213326,

'RMSE': 1.697608373039355,

'MAE': 1.2015739631652835,
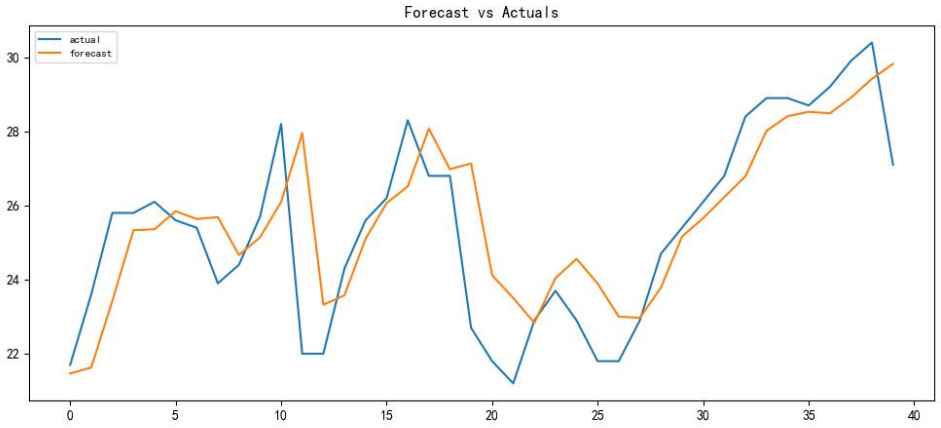
'MAPE': 0.04937994677474915}