C++ DirectX 11 RPG

1 **2**

2 **2**
2.1 2
2.2 3
2.3 3

3 **3**
3.1 3
3.2 6
3.2.1 6
3.3 7
3.4 7

4 **7**
4.1 7
4.2 ScreenToGround 8
4.3 8

5 **8**
5.1 8

6 **8**
6.1 8
6.2 10
6.3 11

7 **11**
7.1 11
7.2 LoL 12
7.3 12
7.4 / 12
7.5 + ... 12
7.6 FBX (Assimp) 12
7.7 ( ) 13
7.8 (M) 13
7.9 UI 13
7.10 13
7.11 13
7.12 + ... 13
7.13 GameScene UI 13
7.14 ImGui 14
7.15 14

1

1:

	Isometric Client — DX11 RPG C++, DirectX 11, Protobuf 3, Dear ImGui, WinSock2 ServerCore v4 GameServer (WSL2 Linux) Binary Header `[size:uint16][msgId:uint16]` + Protobuf 3 payload , , ,

DirectX 11 API RPG . ServerCore io_uring , DX11 , ,
.

```
isometric_client/
  src/
     Core/       App, DX11Device, EngineContext, Input, Timer, WinMain
     Game/       PlayerController, EntityManager, CombatManager,
                  DungeonGenerator, SessionState
     Renderer/   Pipeline, Camera, MeshCache, MaterialManager, ObjLoader,
                  InstanceRenderer, EffectRenderer, MinimapRenderer,
                  TextureLoader, Material
     Network/    TcpClient, PacketFramer, PacketHandler, PacketBuilder,
                  RecvBuffer, NetworkContext
     Scene/      IScene, LoginScene, CharSelectScene, LobbyScene, GameScene
     UI/         UIManager
     Data/       PlayerData, SkillData, InventoryData, CurrencyData, ChatHistory
  assets/
     models/     29  OBJ + MTL (Kenney     +   )
     shaders/    default.hlsl, effect.hlsl, minimap.hlsl
     textures/     .
  proto/          7  Protobuf   (59   )
```

2

2.1

`App&` Context (`EngineContext`, `SessionState`, `NetworkContext`) .

2: Context

EngineContext	DX11Device, Pipeline, Camera, MeshCache, MaterialManager, Input, UIManager, assetsDir, pipelineOk
SessionState	PlayerData, InventoryData, CurrencyData, ChatHistory, playerName, playerId, isLocalPlayerDead, MapData , pendingEnterGame

NetworkContext	TcpClient, PacketHandler, PacketBuilder + Connect/Disconnect/SendSceneReady API	+

`SessionState` Proto (`FillLocalPlayerFromProto`) (`Reset`) . `Reset()` (Inventory, Currency, ChatHistory) .

`NetworkContext` `Connect(host, port)` / `Disconnect()` / `IsConnected()` API .

Scene SceneManager .

1 `App.cpp --- Scene`

```
sceneManager_.Register(SceneId::Game, [this]() {
    return std::make_unique<GameScene>(engineCtx_, session_, netCtx_, sceneManager_);
});
```

2.2

`WinMain` . `App::PollNetwork()` IOCP 0 ms ,
.

`Input.NewFrame → PeekMessage/DispatchMessage → App.PollNetwork() → Timer.Tick(dt) → App.Update(dt) →`

`App::Update(dt)` `SceneManager::Update(dt)` , `App::Render()` `BeginFrame()` → `Scene.OnRender()` → `UIManager.BeginFrame()` → `Scene.OnUI()` → `UIManager.EndFrame()` → `EndFrame()` .

2.3

`SceneManager::ChangeScene()` , `hasPending_` `Update()` .
`ChangeScene()` , Scene Scene . Scene .

3:

LoginScene	·	C/S_LOGIN, C/S_REGISTER
CharSelectScene	· ·	C/S_CHAR_LIST, C/S_CREATE_CHAR, C/S_SELECT_CHAR
LobbyScene	· ·	C/S_ROOM_LIST, C/S_CREATE_ROOM, C/S_JOIN_ROOM
GameScene	(26)	· · · · ·

3

3.1

`Pipeline` `default.hlsl` VS/PS , 2 Constant Buffer .

4:

PerFrame	`b0`	ViewProj , LightDir, AmbientColor
PerObject	`b1`	World , HitFlash (0~1)

Pixel Shader Lambert `HitFlash` , .

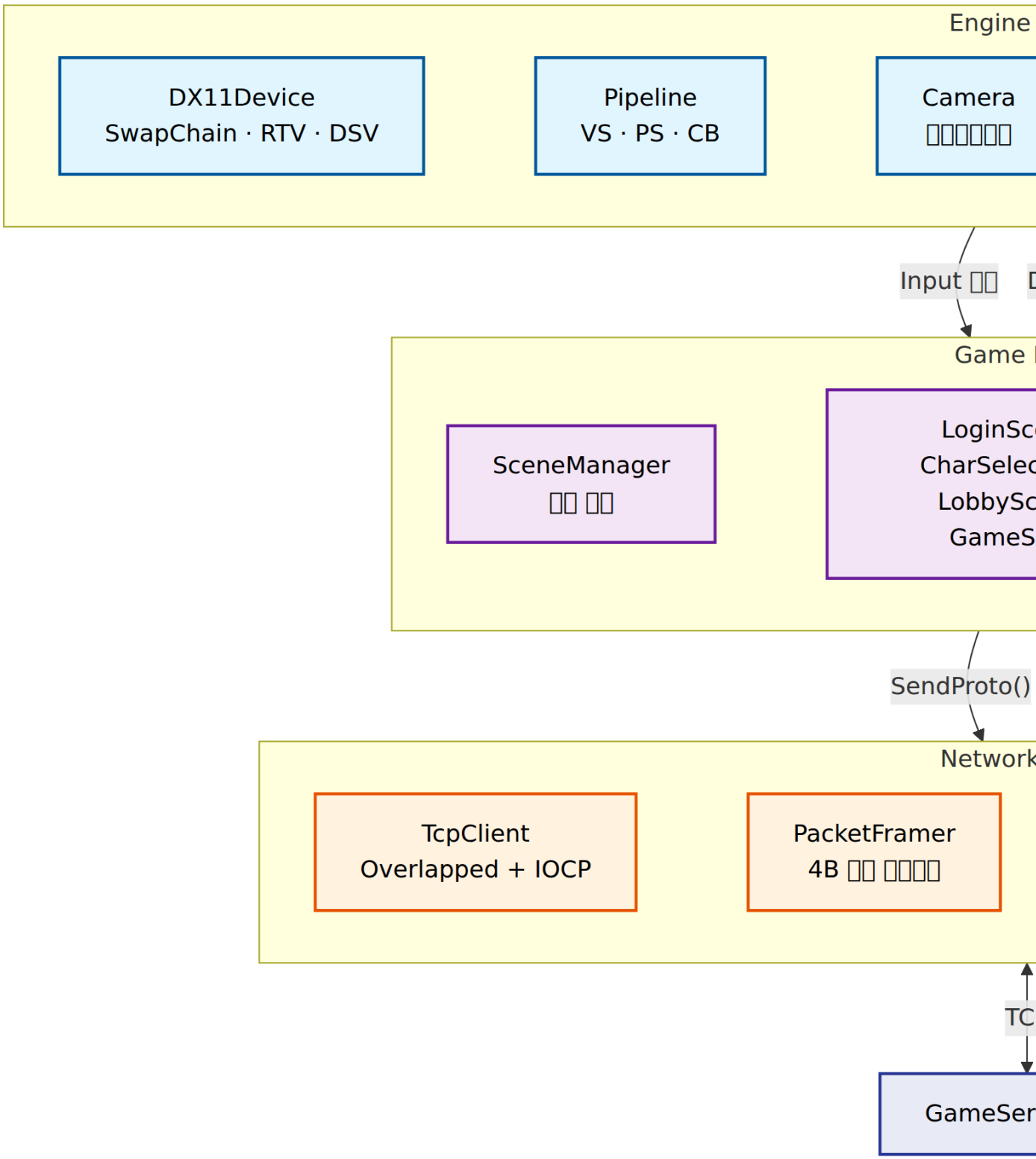
Engine
DX11Device
SwapChain · RTV · DSV
Pipeline
VS · PS · CB
Camera
Input
Game
SceneManager
LoginSc
CharSelec
LobbySc
GameS
SendProto()
Network
TcpClient
Overlapped + IOCP
PacketFramer
4B
TC
GameSer

1: 3-Layer

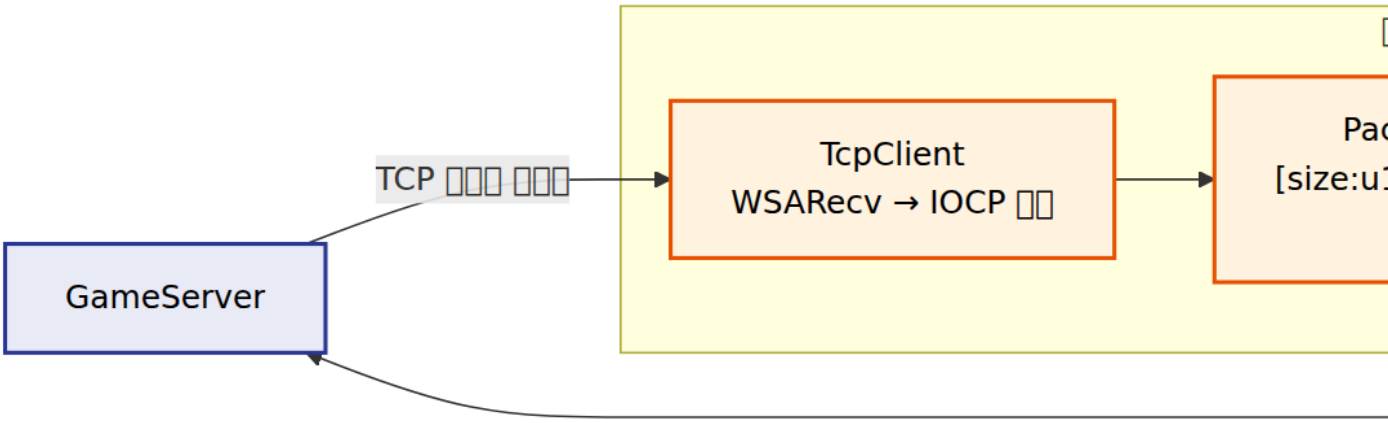

2: Network Layer —

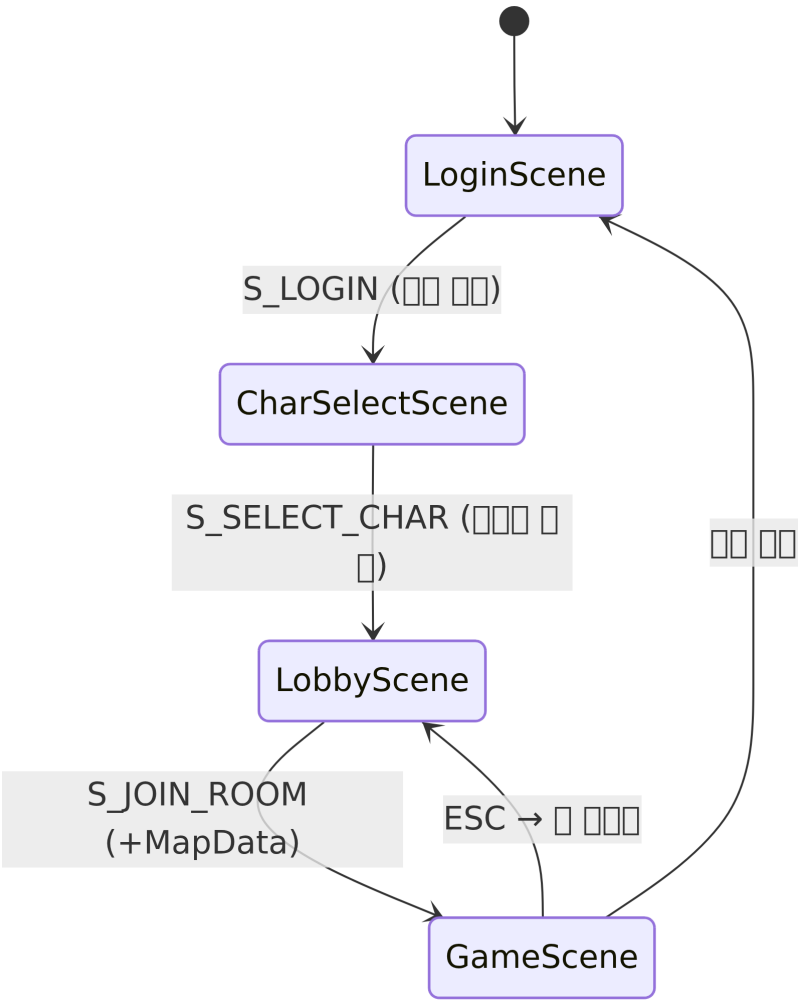

3: 4

2 default.hlsl --- Pixel Shader

```
float4 PSMain(VS_OUT i) : SV_Target
{
    float3 n = normalize(i.WorldNormal);
    float ndotl = saturate(dot(n, -LightDir));
    float4 tex = DiffuseTex.Sample(LinearSampler, i.UV);
    float3 lit = tex.rgb * (AmbientColor + ndotl * 0.7);
    float3 hitColor = float3(1.0, 0.3, 0.2);
    lit = lerp(lit, hitColor, HitFlash);
    return float4(lit, 1.0);
}
```

3.2

. 4640 , DrawIndexed() . IASetVertexBuffers/IASetIndexBuffer/UpdatePerObject(Map/Unmap+memcpy) + DrawIndexed CPU→GPU . floor, wall 8 , Draw Call . InstanceRenderer , Structured Buffer World Matrix 1 Draw Call .

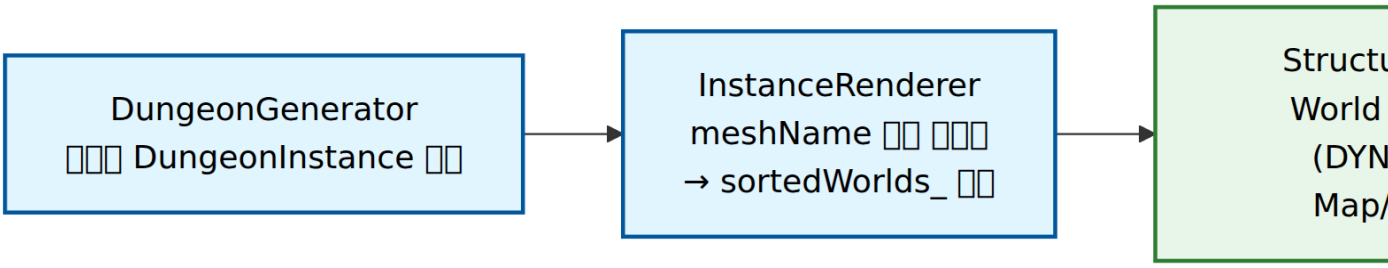

4:

5:

DungeonInstance	+ World Matrix
BatchInfo	{startIndex, count} — Structured Buffer
EnsureBuffer()	(capacity)
BindSingle()	1-element

capacity 1.5 . 256 .

3 InstanceRenderer.cpp --- EnsureBuffer()

```
uint32_t newCapacity = (neededCount < 256) ? 256 : ((neededCount * 3) / 2);

D3D11_BUFFER_DESC bd = {};
bd.ByteWidth = newCapacity * sizeof(XMFLOAT4X4);
bd.Usage = D3D11_USAGE_DYNAMIC;
bd.BindFlags = D3D11_BIND_SHADER_RESOURCE;
bd.MiscFlags = D3D11_RESOURCE_MISC_BUFFER_STRUCTURED;
bd.StructureByteStride = sizeof(XMFLOAT4X4);
```

InstanceRenderer Structured Buffer . instanceBuffer_(256+ , 1.5) singleBuffer_(1-element, Map/Unmap) . non-instanced , . 1-element Structured Buffer .

3.2.1

6

GameScene useInstancing_ D3D11 Timestamp Query . (DrawIndexed × N vs DrawIndexedInstanced × M) CPU (std::chrono::high_resolution_clock) GPU (D3D11 Timestamp Query, 3-frame latency) .

	Draw Call	CPU (s)	GPU (s)	
Instanced (`DrawIndexedInstanced` × M)	**8**	**34.8**	**80.3**	= 8

CPU time . Draw Call , 4640 `DrawIndexed` IA , PerObject Map/Unmap, 1 . 16ms budget 8ms 35 s (, UI,) .

3.3

, `effect.hlsl` .

( ) → . `CombatManager::HandleFire()` `Projectile` . , `HandleDamage()` `HitEffect` . `EffectRenderer` , `EffectType` .

7:

EffectType	
3 (Bullet)	+
4 (Hit)	+

`EffectRenderer` Right/Up . , UV . `EffectTime`(0→1) .

Bullet — , , . `centered.x`(-0.5~+0.5) `smoothstep` , .

Hit — . (`ringRadius = t·0.8`), (`saturate(1 - t·4)`), 6 . `atan2(y, x)` 6 (`i· /3`) .

(`DepthWriteMask = ZERO`), (`SrcBlend = SRC_ALPHA`, `DestBlend = ONE`) . BlendState DepthStencilState · .

3.4

`MeshCache` `assets/models/` `.obj` , (Box 0.4×0.9×0.4) (Sphere 0.5) . `ObjLoader` Wavefront OBJ , UV, , .

Kenney 3D OBJ Wavefront OBJ `v` . `std::istringstream` float . face N-gon(4) , face `(0, i-1, i)` triangle fan . OBJ face normal cross product · smooth shading .

`MaterialManager` OBJ MTL `ID3D11ShaderResourceView` , PS `t0` . MTL fallback .

(29): 3 (human, orc, character-a), 3 (floor, floor-detail, wall), 23 (barrel, banner, chest, column, coin, dirt, gate, rocks, stairs, stones, torch, trap, wall-half, wall-narrow, wall-opening, wood-structure, wood-support — Kenney 3D)

4

4.1

(Orthographic) . `Width = orthoSize × aspect × 2`, `Height = orthoSize × 2`, Z [-200, 500] . Pitch 30°, Yaw 45° , Smoothing . Right/Up .

4 effect.hlsl ---

```
float3 worldPos = EffectPos
    + CameraRight * i.Pos.x * EffectScale
    + CameraUp    * i.Pos.y * EffectScale;
```

5 effect.hlsl --- Bullet

```
float4 Bullet(float2 uv, float t)
{
    float2 centered = uv - 0.5;
    float d = length(centered) * 2.0;

    float core  = 1.0 - smoothstep(0.0, 0.3, d);
    float glow  = 1.0 - smoothstep(0.1, 0.8, d);
    float trail = saturate(1.0 - smoothstep(-0.5, 0.1, centered.x))
                * smoothstep(0.3, 0.0, abs(centered.y));

    float3 col = float3(1,1,0.9) * core
               + float3(1,0.7,0.2) * glow * 0.6
               + float3(1,0.5,0.1) * trail * 0.4;
    float alpha = saturate(core + glow * 0.5 + trail * 0.3);
    return float4(col, alpha);
}
```

8:

Pitch	30°
Yaw	45°
Distance	20 -
OrthoSize	15 ( ), 5~40 ( )
SmoothTime	0.15s
ZoomSpeed	2.0

.

= + (d·cos(pitch)·sin(yaw), d·sin(pitch), -d·cos(pitch)·cos(yaw))

t = dt / kSmoothTime(0.15s) , pos += (target - pos) * t . SnapTo() .

kZoomSpeed(2.0) orthoSize , [5, 40] / .

4.2 ScreenToGround

. .

(x, y) NDC : ndcX = 2x/w - 1, ndcY = 1 - 2y/h.

NDC near(z=0) far(z=1) invViewProj .

near→far y=groundY t = (groundY - originY) / dirY .

dirY 0 ( ) t = 0 .

4.3

Walk 5.0 m/s, Run(Shift) 8.0 m/s , 20Hz(50ms) . 0.0001 0.5° .

5

5.1

8

. , . “ ” , .

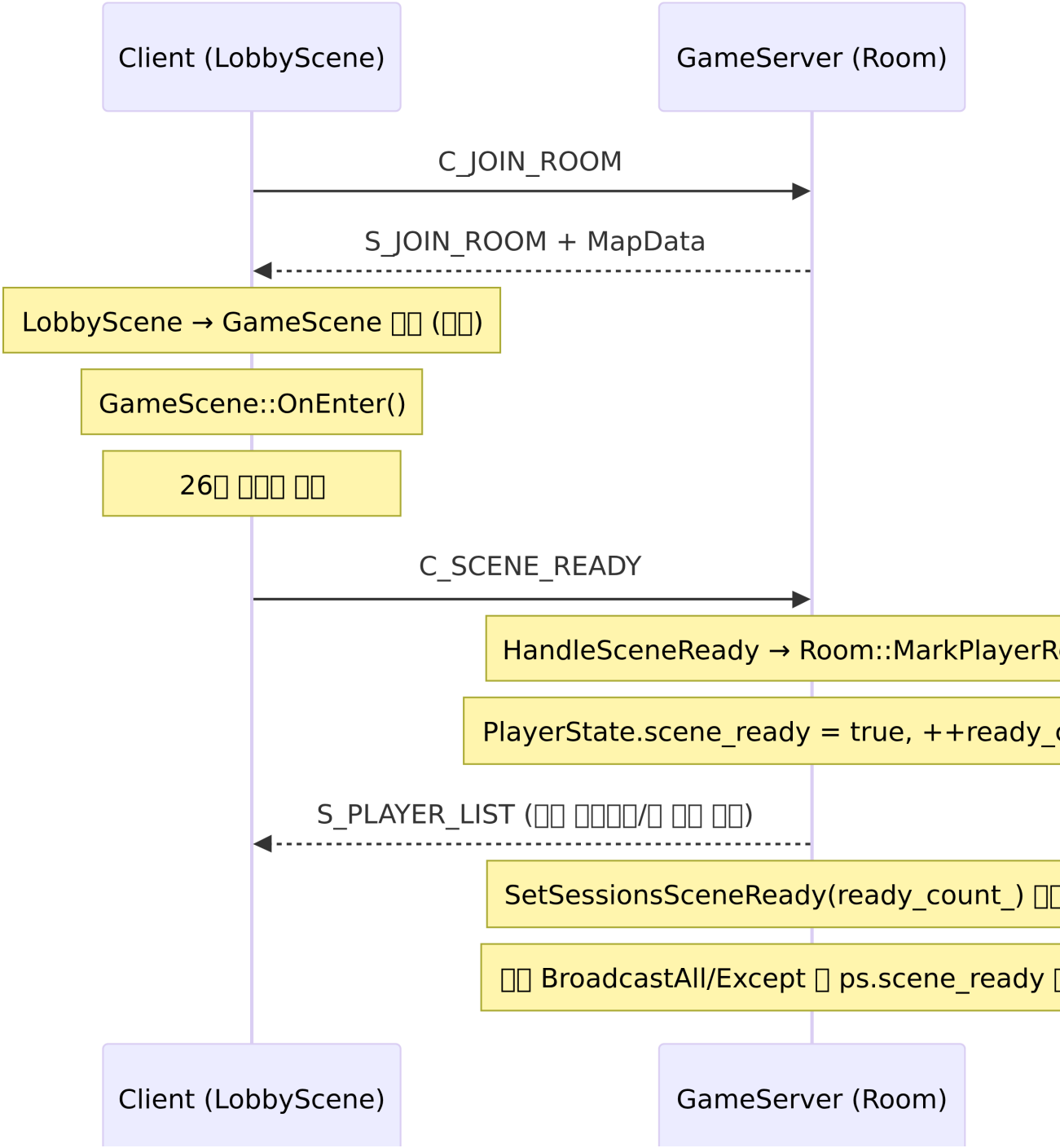
Client (LobbyScene)
GameServer (Room)
C_JOIN_ROOM
S_JOIN_ROOM + MapData
LobbyScene → GameScene □□ (□□)
GameScene::OnEnter()
26□ □□□ □□
C_SCENE_READY
HandleSceneReady → Room::MarkPlayerR
PlayerState.scene_ready = true, ++ready_
S_PLAYER_LIST (□□ □□□□/□ □□ □□)
SetSessionsSceneReady(ready_count_) □□
□□ BroadcastAll/Except □ ps.scene_ready □
Client (LobbyScene)
GameServer (Room)

5:

6 effect.hlsl --- Hit

```
float4 Hit(float2 uv, float t)
{
    float2 centered = uv - 0.5;
    float d = length(centered) * 2.0;

    float ringRadius = t * 0.8;
    float ring = smoothstep(ringRadius - 0.15, ringRadius, d)
               * smoothstep(ringRadius + 0.15, ringRadius, d);
    float flash = (1.0 - smoothstep(0.0, 0.4, d)) * saturate(1.0 - t * 4.0);

    float angle = atan2(centered.y, centered.x);
    float sparks = 0.0;
    for (int i = 0; i < 6; i++) {
        float a = (float)i * 1.0472;  // 2 /6
        float sparkD = abs(angle - a);
        sparkD = min(sparkD, 6.2832 - sparkD);
        float sparkRadius = t * 0.7;
        sparks += smoothstep(0.15, 0.0, sparkD)
                * smoothstep(sparkRadius - 0.1, sparkRadius, d)
                * smoothstep(sparkRadius + 0.1, sparkRadius, d);
    }

    float fadeOut = 1.0 - t;
    float3 col = float3(1,0.6,0.2) * ring
               + float3(1,1,0.8) * flash
               + float3(1,0.4,0.1) * sparks * 0.5;
    return float4(col, saturate(ring + flash + sparks * 0.5) * fadeOut);
}
```

9:

Projectile	80 m/s + `IsWalkable()`	traveled 50m	
AttackEffect	skillId (Slash)	0.3s ( ) / 0.6s ( )	1.0→1.5 ease-out
DamagePopup	ImGui (→)	1.5s	y += 2.0 · dt +
HitEffect	(Hit)	0.3s	y+0.9

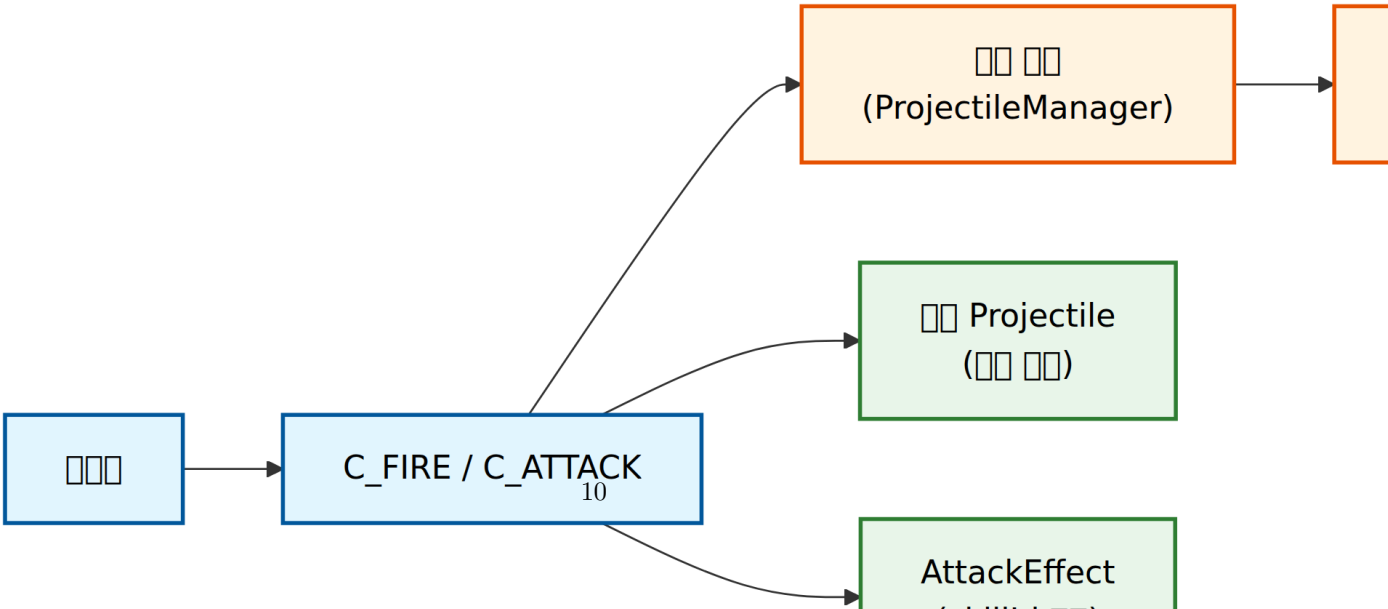

7 Camera.cpp --- ScreenToGround()

```
XMFLOAT3 Camera::ScreenToGround(float mouseX, float mouseY,
                                float screenW, float screenH, float groundY) const
{
    float ndcX = 2.0f * mouseX / screenW - 1.0f;
    float ndcY = 1.0f - 2.0f * mouseY / screenH;

    XMMATRIX invVP = XMMatrixInverse(nullptr, GetViewProj());

    XMVECTOR nearPt = XMVector3TransformCoord(
        XMVectorSet(ndcX, ndcY, 0.0f, 1.0f), invVP);
    XMVECTOR farPt  = XMVector3TransformCoord(
        XMVectorSet(ndcX, ndcY, 1.0f, 1.0f), invVP);

    XMVECTOR rayDir = XMVectorSubtract(farPt, nearPt);
    float originY = XMVectorGetY(nearPt);
    float dirY = XMVectorGetY(rayDir);
    float t = (dirY != 0.0f) ? (groundY - originY) / dirY : 0.0f;

    XMVECTOR hit = XMVectorAdd(nearPt, XMVectorScale(rayDir, t));
    XMFLOAT3 result;
    XMStoreFloat3(&result, hit);
    return result;
}
```

8 PlayerController.cpp --- 20Hz

```
sendTimer_ += dt;
if (sendTimer_ >= kSendRate) {    // kSendRate = 0.05s
    sendTimer_ -= kSendRate;
    float distSq = dx*dx + dy*dy + dz*dz;
    float rotDiff = fabsf(data_->rotationY - lastSentRot_);
    if (distSq > 0.0001f || rotDiff > 0.5f) {
        sendPending_ = true;
        lastSentPos_ = data_->position;
        lastSentRot_ = data_->rotationY;
    }
}
```

6.3

EntityManager , targetPos/targetRotY (Lerp) . 20Hz 60fps .

current + (target - current) * t , 359° → 1° -358° . 2° , [-180°, +180°] .

isDead , hitTimer 0 HitFlash . moveState(0=idle, 1=walk, 2=run) .

7

7.1

minimap.hlsl . R8_UNORM , ViewRadius . Vertex Shader SV_VertexID .

( ) ( ) EntityPositions[16] . smoothstep .

9 DungeonGenerator.cpp ---

```
bool adjN = IsFloor(grid, gw, gh, x, z - 1);
bool adjS = IsFloor(grid, gw, gh, x, z + 1);
bool adjE = IsFloor(grid, gw, gh, x + 1, z);
bool adjW = IsFloor(grid, gw, gh, x - 1, z);

if (adjN || adjS || adjE || adjW) {
    float rotY = 0.0f;
    if (adjN)      rotY = 0.0f;
    else if (adjE) rotY = 90.0f;
    else if (adjS) rotY = 180.0f;
    else if (adjW) rotY = 270.0f;
    // ... wall
}
```

10 EntityManager.cpp ---

```
float t = std::min(dt * kLerpSpeed, 1.0f);  // kLerpSpeed = 10.0
for (auto& [id, e] : entities_) {
    e.data.position.x += (e.targetPos.x - e.data.position.x) * t;
    e.data.position.z += (e.targetPos.z - e.data.position.z) * t;

    if (e.hitTimer > 0) e.hitTimer -= dt;

    //     : ±180°
    float diff = e.targetRotY - e.data.rotationY;
    while (diff > 180.0f) diff -= 360.0f;
    while (diff < -180.0f) diff += 360.0f;
    e.data.rotationY += diff * t;
}
```

7.2 LoL

8 16 → . DungeonGenerator::IsWalkable() , .
.

7.3

.

11:

PlayerController	IsWalkable() +	UX
CombatManager	IsWalkable()	
HandleMove()	GetTile() ,	

. W+D( ) , . PlayerController
3 (Axis-Separated) . X , Z .

11 PlayerController.cpp ---

```
float newX = data_->position.x + moveDir.x * speed * dt;
float newZ = data_->position.z + moveDir.z * speed * dt;

if (dungeon_) {
    // 1.
    if (dungeon_->IsWalkable(newX, newZ)) {
        data_->position.x = newX;
        data_->position.z = newZ;
    }
    // 2. X
    else if (dungeon_->IsWalkable(newX, data_->position.z)) {
        data_->position.x = newX;
    }
```

12

7.7 ( )

Room . (R1→R2→R3→R1) .

`GameScene` . column , . Zone depth .

7.8 (M)

M . `ImGui::GetForegroundDrawList()` , 4px .

12:

	(60, 50, 70)
	(140, 130, 150)
	+
	+
	(r=4)
	(r=2.5)
	(r=2)

7.9 UI

10×10 , `ImGui::Selectable` . (Dog Tag) `GetItemName()` , Use/Drop .

7.10

TCP .

1. /
2. Connect TCP → Login/Register
3. `TcpClient::Connect()` `getaddrinfo()` resolve
4. `lastError_` → UI

Login + .

7.11

10m , 3m "Press [E]" . E `C_PICKUP` → → `S_ITEM_ADD` + `S_GROUND_ITEM_DESPAWN` .

coin , 5 . .

7.12 +

10~50 (`S_CURRENCY_UPDATE`) , 30% (`S_ITEM_ADD`) . Gold , HP . +50 Gold .

7.13 GameScene UI

`GameScene::OnUI()` 13 UI .

13: GameScene UI

DrawHPBar	HP · · ,
DrawCrosshair	LoL +
DrawMinimap	
DrawRemoteHPBars	3s + HP

DrawDamagePopups	1.5s	
DrawChat		(All/Party/Whisper)
DrawInventory	I	UI +
DrawPartyPanel		HP ·
DrawLeaderboard	Tab	K/D
DrawKillFeed	5s	
DrawFullMap	M	
DrawDeathOverlay		
DrawExitMenu	ESC	

`WndProc` `ImGui::GetIO().WantTextInput` `WantCaptureMouse` UI .
, . UP .

7.14 ImGui

ImGui . `ImGui::Begin()` , (I)
`Selectable` . ImGui . HP , , , , HUD
`ImGuiWindowFlags_NoBringToFrontOnFocus | ImGuiWindowFlags_NoFocusOnAppearing` ,
.

7.15

14: -

TcpClient + PacketFramer	Session + RecvBuffer	Binary Header + Protobuf
DungeonGenerator.BuildFromMapData()	DungeonGenerator ( )	MapData ·
C_FIRE → → S_DAMAGE	ProjectileManager	+
EntityManager	Room 20Hz	
HandleMove	DungeonGenerator.GetTile()	
S_SCOREBOARD →	PlayerState kills/deaths	/
C_PORTAL →	Room.Connections()	Room
S_GROUND_ITEM_SPAWN → E	Room.SpawnGroundItem()	
S_CURRENCY_UPDATE +	GrantKillReward()	+ DB
S_ITEM_ADD		
DrawFullMap (M)	MapData +	
getaddrinfo()	Listener 0.0.0.0:7777	

(io_uring , JobQueue , BufferPool,) ServerCore .

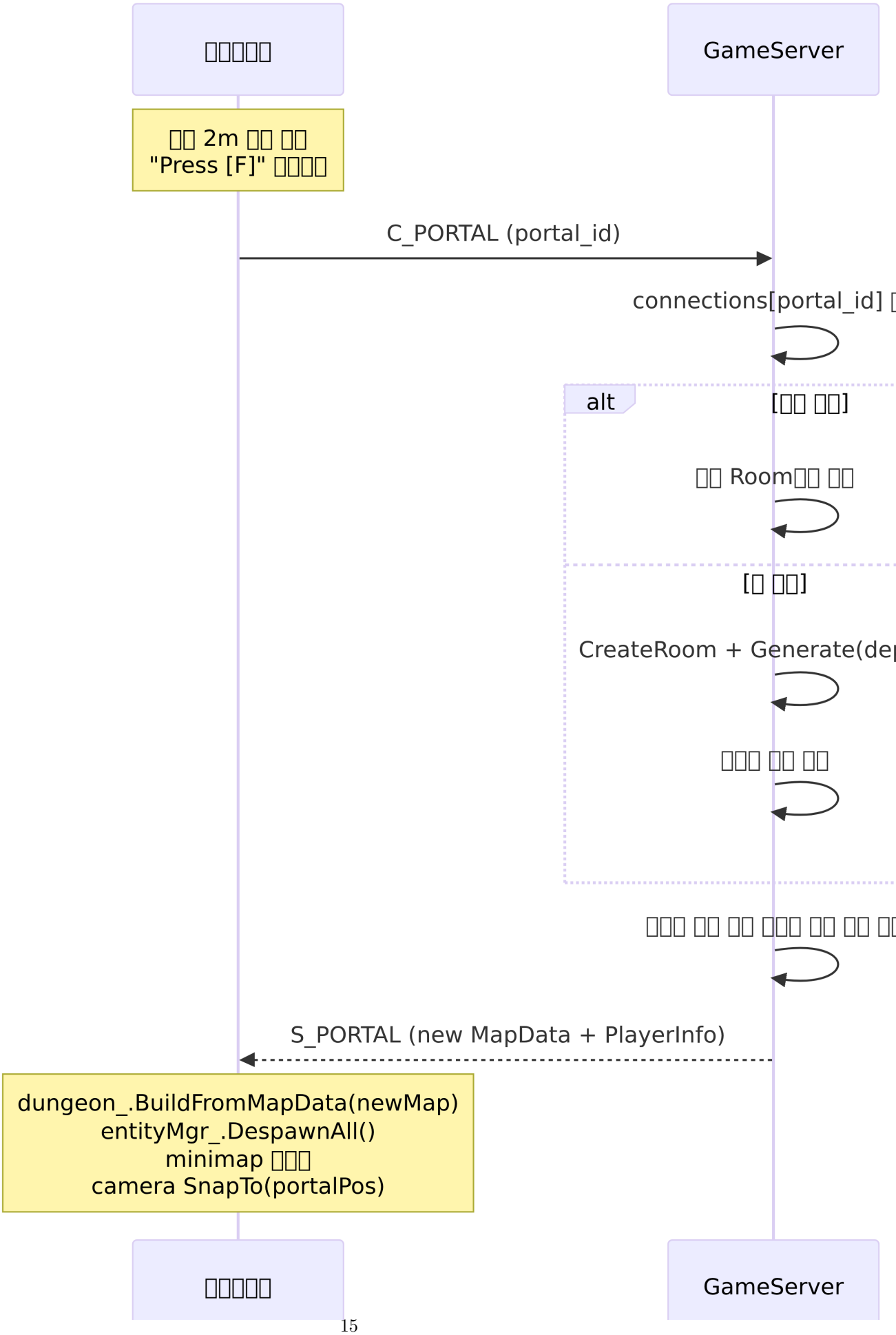
□□□□□
GameServer
□□ 2m □□ □□
"Press [F]" □□□□
C_PORTAL (portal_id)
connections[portal_id] □
alt
[□□ □□]
□□ Room□□ □□
[□ □□]
CreateRoom + Generate(dep
□□□ □□ □□
□□□ □□ □□ □□□ □□ □□ □□
S_PORTAL (new MapData + PlayerInfo)
dungeon_.BuildFromMapData(newMap)
entityMgr_.DespawnAll()
minimap □□□
camera SnapTo(portalPos)
□□□□□
GameServer

7: