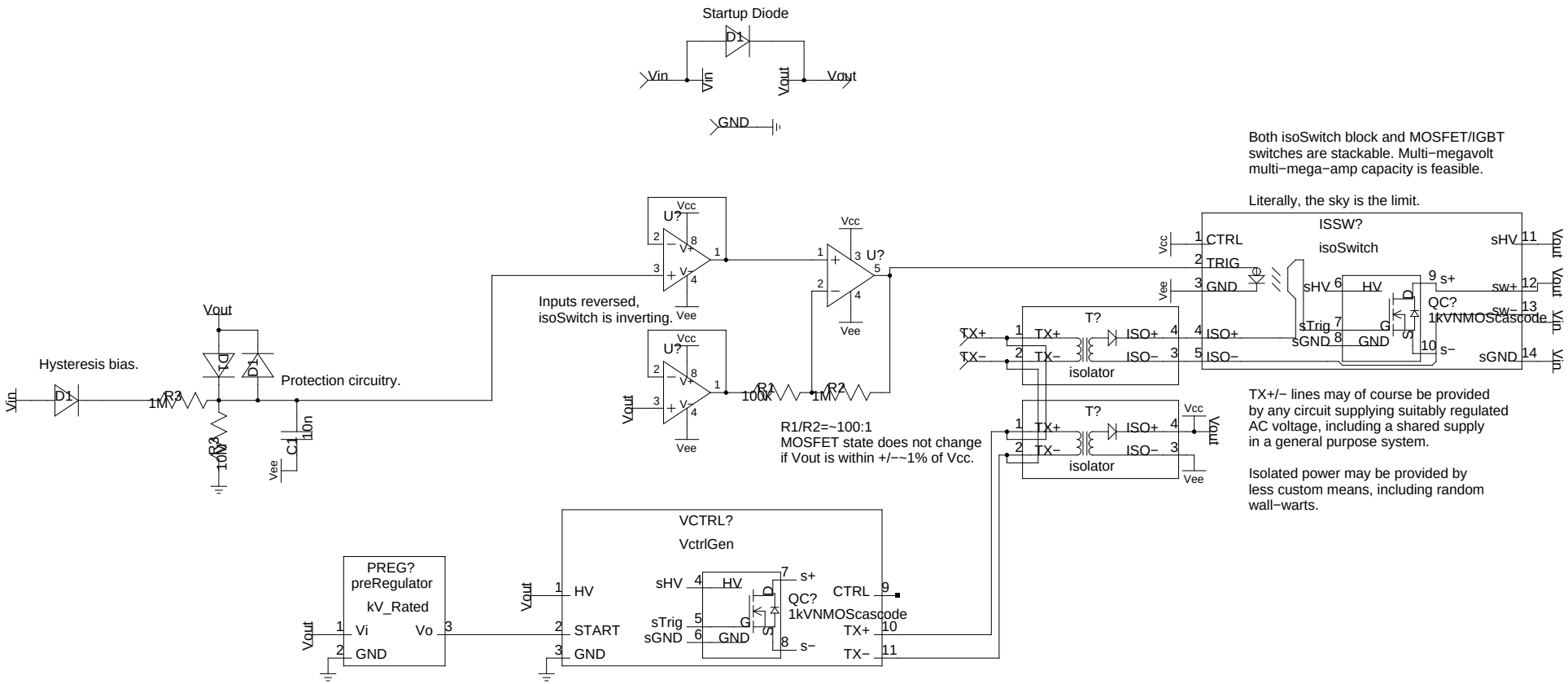
Startup Diode
D1
Vin
Vout
GND
Both isoSwitch block and MOSFET/IGBT switches are stackable. Multi−megavolt multi−mega−amp capacity is feasible.
Literally, the sky is the limit.
ISSW?
isoSwitch
CTRL
TRIG
GND
sHV
HV
sTrig
sGND
QC?
1kVNMOScascode
s+
s−
sw+
sw−
Vcc
Vee
U?
Inputs reversed, isoSwitch is inverting.
R1
R2
100k
1M
R1/R2=~100:1
MOSFET state does not change if Vout is within +/−~1% of Vcc.
T?
TX+
TX−
ISO+
ISO−
isolator
TX+/− lines may of course be provided by any circuit supplying suitably regulated AC voltage, including a shared supply in a general purpose system.
Isolated power may be provided by less custom means, including random wall−warts.
Hysteresis bias.
Protection circuitry.
R3
C1
10n
PREG?
preRegulator
kV_Rated
Vi
Vo
VCTRL?
VctrlGen
START
CTRL