Copyright (C) 2021,2022- by mirage335, AGPLv3 license, for all content unless explicitly stated otherwise by author in writing.

Copyright (C) 2021,2022- by mirage335, AGPLv3 license for the uTST pages nominally spanning pages 1-191, excepting any content for which other copyright licensing is explicitly demarcated in the text here or underlying source code.

Copyright (C) 2021,2022- by mirage335, AGPLv3 license for the mirage335-recruiting pages nominally spanning pages 239-265 .

Other copyright licensing terms may be availabe upon request. Author's Standard Operating Procedures for Copyleft are nominally stated at page 252 . Author mirage335 respects the reservations of such organizations as 'Google' regarding AGPLv3, and is absolutely willing to make reasonable accommodations.

Self-modifying combiation of HTML and BASH shell script 'scriptedIllustrator' derived from 'ubiquitous bash' consolidated this book with calculations, etc.

universalTechnologySpecificationTextbook (uTST)

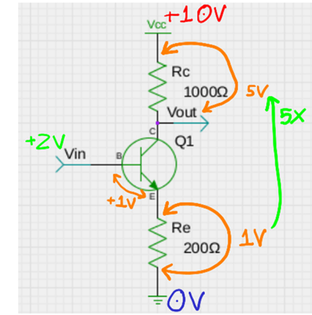

by
Matthew "mirage335" Hines

flatTool

Accelerating Wall of Large Heavy Optics

Mirror bounce and abberation correction imposes large assemblies of many optics mounted to a single surface. Tool as a flat table mounted vertically to a gantry is most practical, and most quickly assembled/maintained. Modern linear bearings, etc, are adequate to inexpensively accelerate such loads (>>100kg) with reasonable settling times.

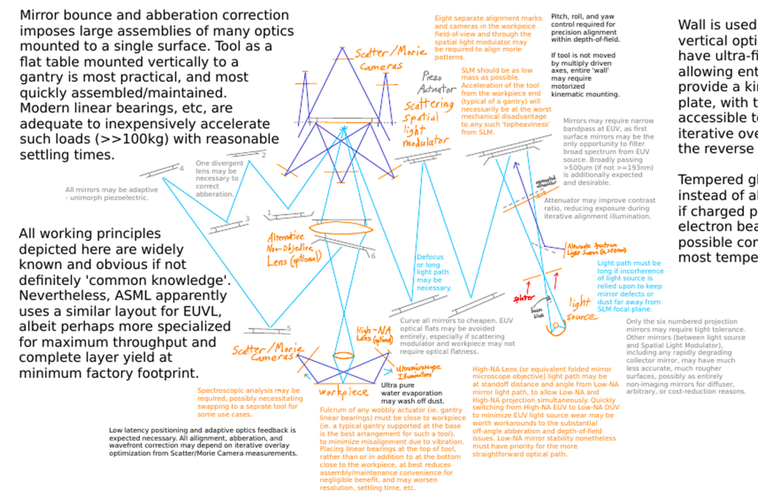

All working principles depicted here are widely known and obvious if not definitely 'common knowledge'. Nevertheless, ASML apparently uses a similar layout for EUVL, albeit perhaps more specialized for maximum throughput and complete layer yield at minimum factory footprint.

Wall is used as a dedicated vertical optical table, and may have ultra-fine-thread bushings allowing entire surface to directly provide a kinematic adjustment plate, with the adjustable screws accessible to stepper motors (for iterative overlay optimization) at the reverse side.
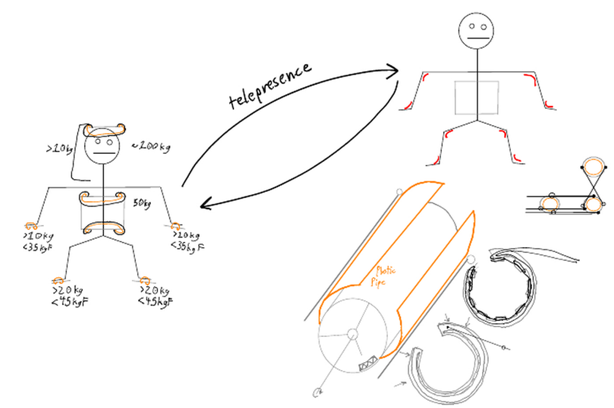
Tempered glass may be used instead of aluminum or invar alloy if charged particle deflection (ie. electron beam distortion) is a possible concern. Apparently most tempered glass is float glass.