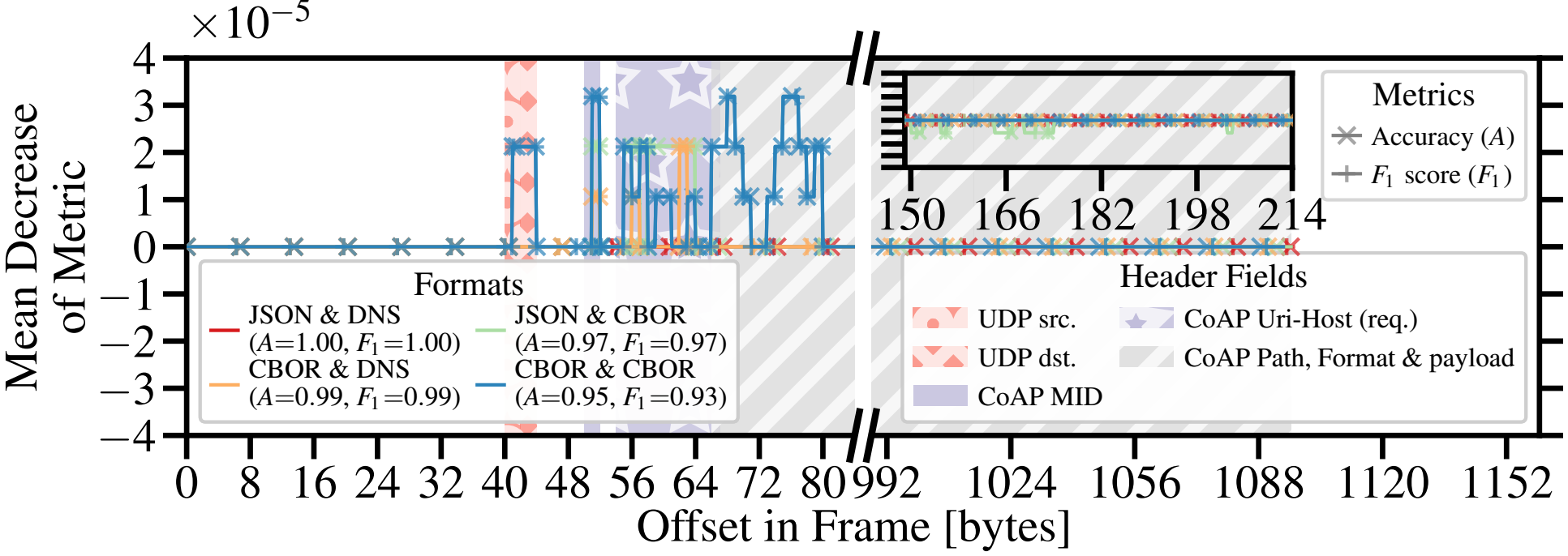
×10−5
Mean Decrease of Metric
4
3
2
1
0
−1
−2
−3
−4
0 8 16 24 32 40 48 56 64 72 80 992 1024 1056 1088 1120 1152
Offset in Frame [bytes]
150 166 182 198 214
Formats
JSON & DNS (A=1.00, F1=1.00)
JSON & CBOR (A=0.97, F1=0.97)
CBOR & DNS (A=0.99, F1=0.99)
CBOR & CBOR (A=0.95, F1=0.93)
Header Fields
UDP src.
UDP dst.
CoAP MID
CoAP Uri-Host (req.)
CoAP Path, Format & payload
Metrics
Accuracy (A)
F1 score (F1)