Example Breadth-First Search

Consider the following directed graph:

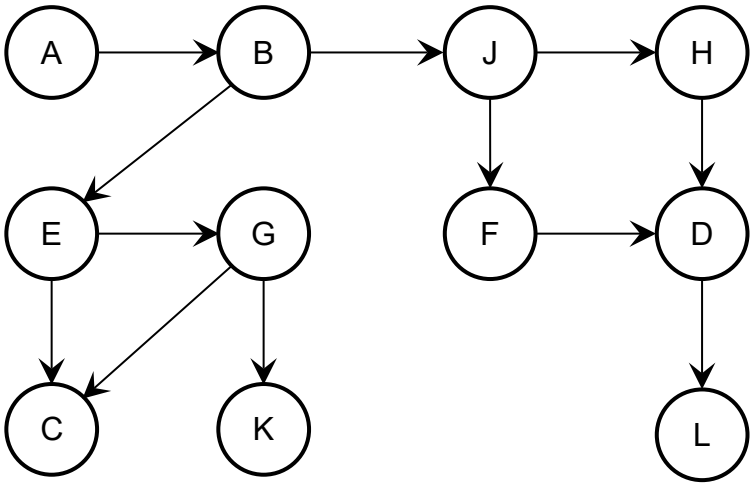

Perform a breadth-first search on the given graph, starting at node A. If in a step multiple nodes can be chosen, select the node that comes first in alphabetical order. Use the table below to show how the respective queue develops step by step.

step	*state of the queue*						*queue operation*	*node coloring*	*prede-cessor*
0									
1									
2									
3									
4									
5									
6									
7									
8									
9									
10									
11									
12									
13									
14									
15									
16									
17									
18									
19									
20									
21									
22									