01	INDEX	21	LEVEL SHIFT CIRCUITRY	41	HISTORY	
02	BLOCK DIAGRAM	22	SPI FLASH ROM			
03	POWER TREE	23	EMMC			
04	POWER SEQUENCE	24	BNO055			
05	SOC MEMORY	25	WIFI_RT5572N			
06	SOC POWER1	26	BT_CSR CRS8510			
07	SOC DISPLAY/CAMERA	27	USB3.0_TYPE-A			
08	SOC PCIE/SDMMC/I2S AUDIO	28	USB HSIC			
09	SOC USB/HSIC/I2C/ISH	29	RTL8111G-CG			
10	SOC CLK/SPI/GPIO/HSUART	30	EDP TO HDMI			
11	SOC GND	31	AUDIO1			
12	SOC POWER2	32	AUDIO2			
13	SOC DECOUPLING CAPS	33	FUNCTION CONN			
14	SOC POWER TRIBUTARIES	34	3V VOLTAGE REGULATOR			
15	SD CARD	35	PMIC 1of3/CONTROL			
16	HARDWARE STRAP	36	PMIC 2of3/SWITCHING POWER			
17	POWER & RESET PIN HEADER	37	PMIC 1of3/CLDO			
18	MEMORY 1/2	38	VTT VOLTAGE REGULATOR			
19	MEMORY 3/4	39	DC IN 26 PIN CONNECTOR			
20	DDR3L-RS VREF&Termination	40	MECHANICAL COMPONENT			

AAEON® an ASUS assoc. co.

Title: **Index**

Size	Document Number	Rev:
A	MF001	A1.0_0_0

Date: Tuesday, September 26, 2017 Sheet: 1 of 41

Block Diagram

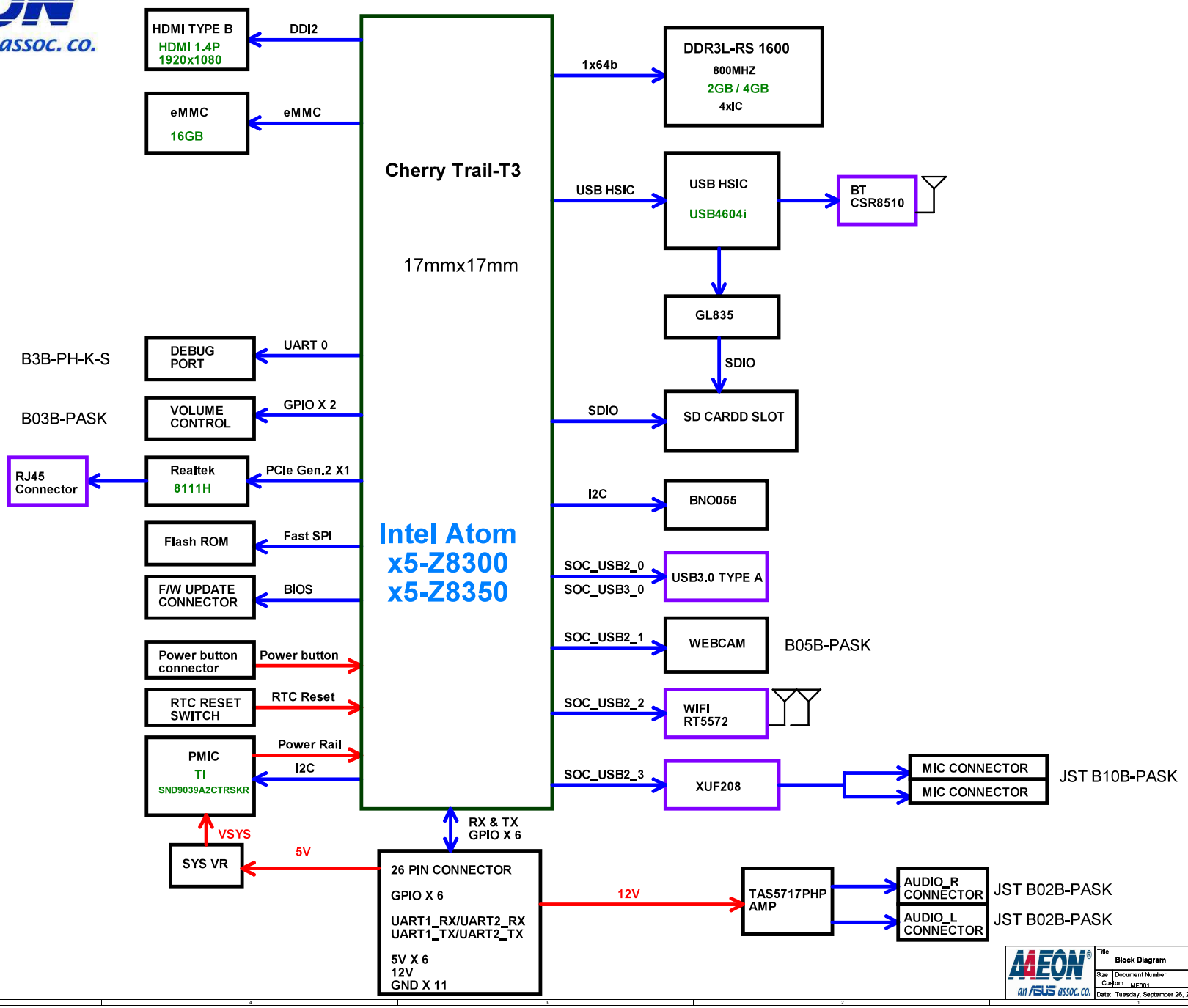

Title: Block Diagram			
Size: Custom	Document Number: ME001		Rev: A1.0_0_0
Date: Tuesday, September 26, 2017	Sheet: 2	of	41

MF001-Z8350 Power Tree

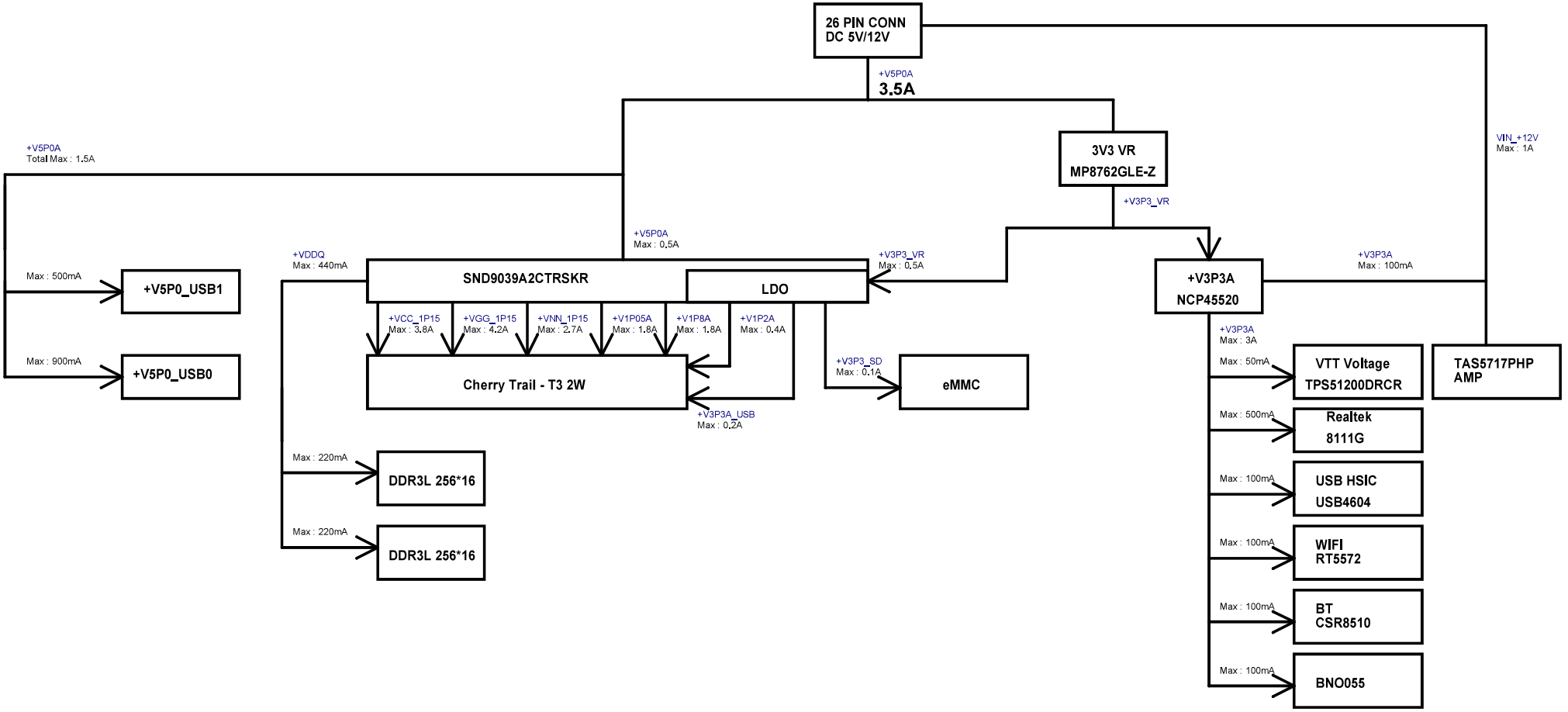

Title: Power Tree		
Size: B	Document Number: MF001	Rev: A1.0_0_0
Date: Tuesday, September 26, 2015	Sheet: 3 of 41	

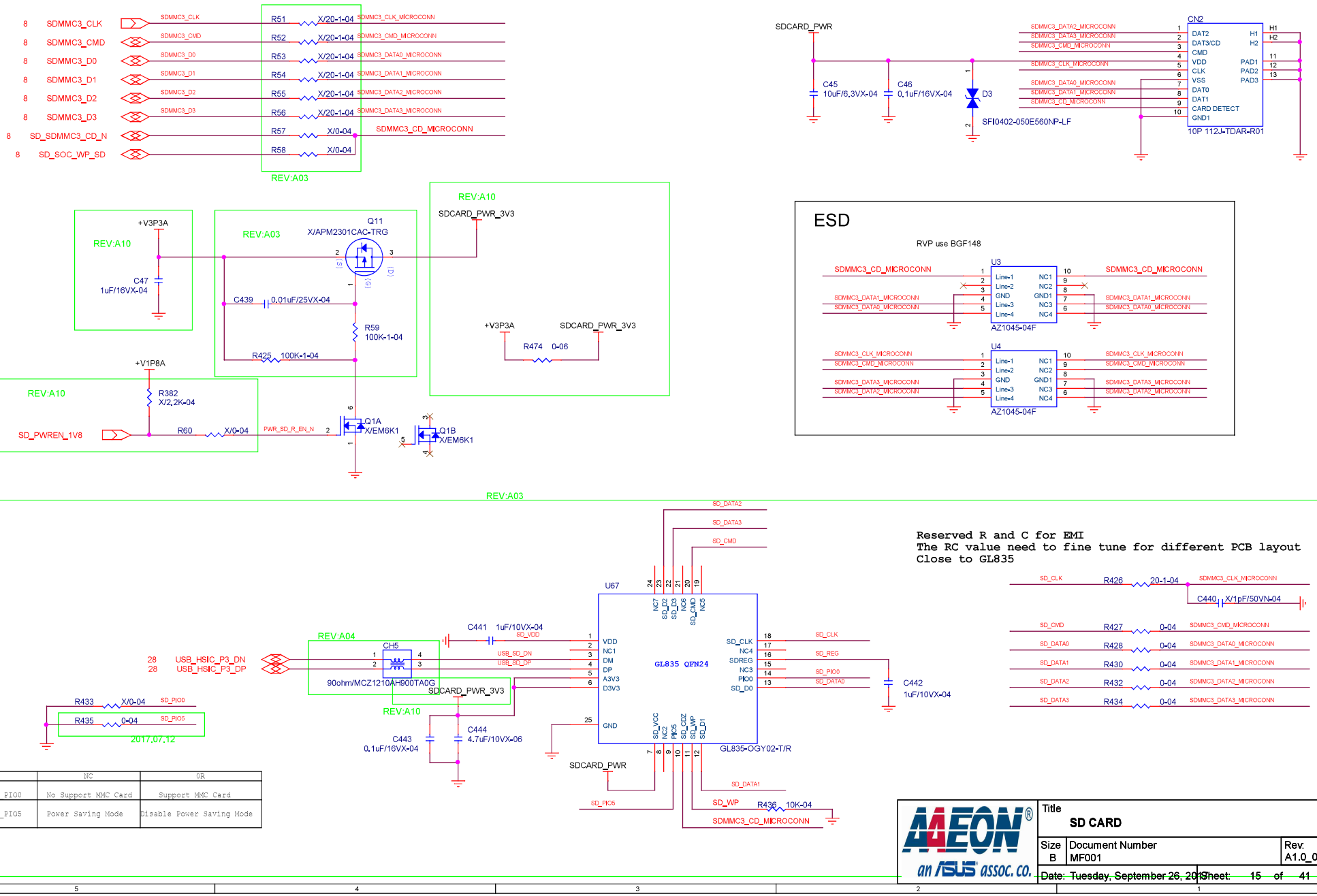

	NC	0R
SD_PIO0	No Support MMC Card	Support MMC Card
SD_PIO5	Power Saving Mode	Disable Power Saving Mode

AAEON an ASUS assoc. co.

Title: SD CARD

Size	Document Number	Rev.
B	MF001	A1.0_0_0

Date: Tuesday, September 26, 2017 Sheet 15 of 41

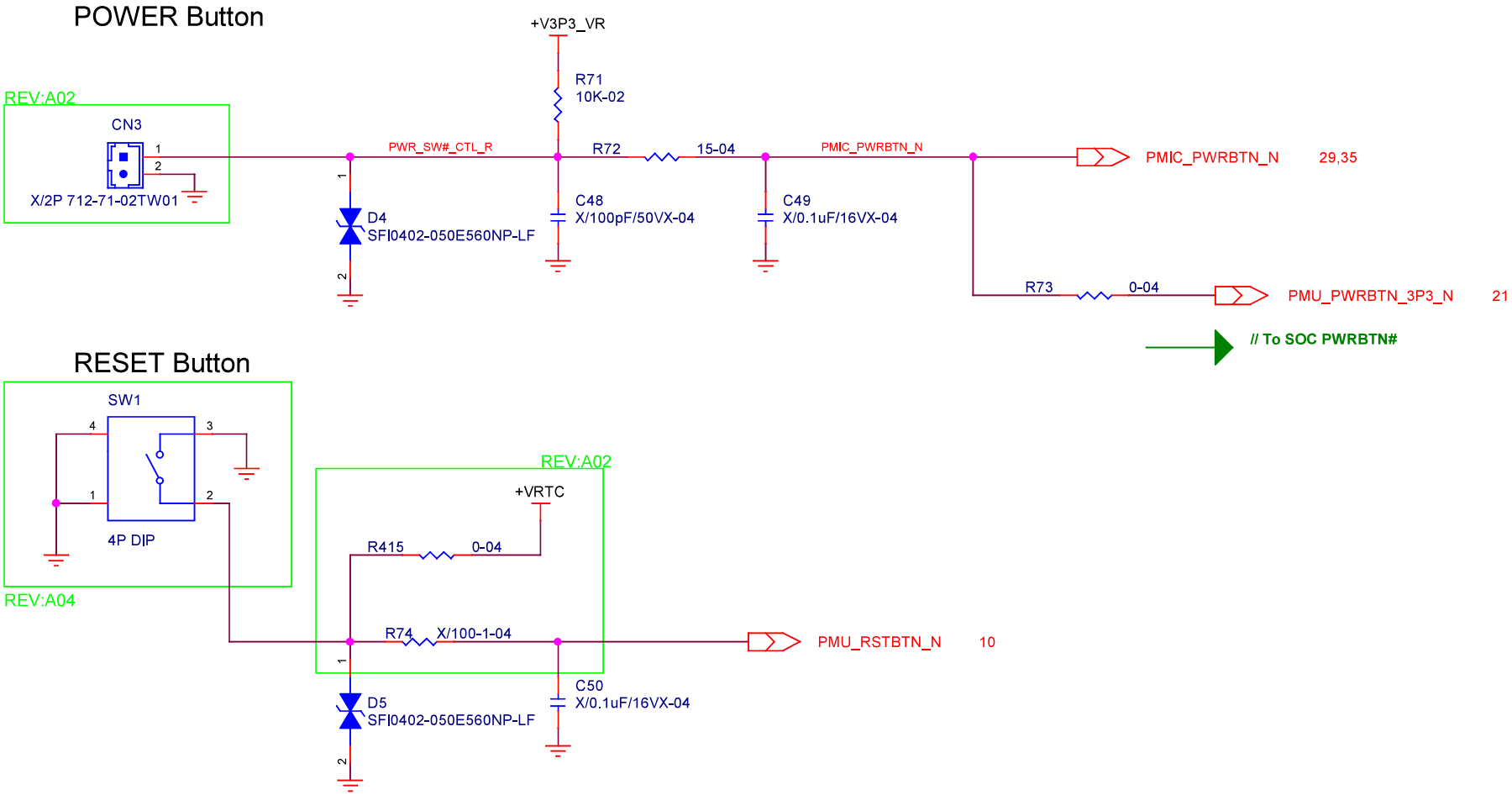

AAEON an ASUS assoc. co.	Title: POWER & RESET PIN HEADER	
Size: A	Document Number: MF001	Rev: A1.0_0_0
Date: Tuesday, September 26, 2017	Sheet: 17 of 41	

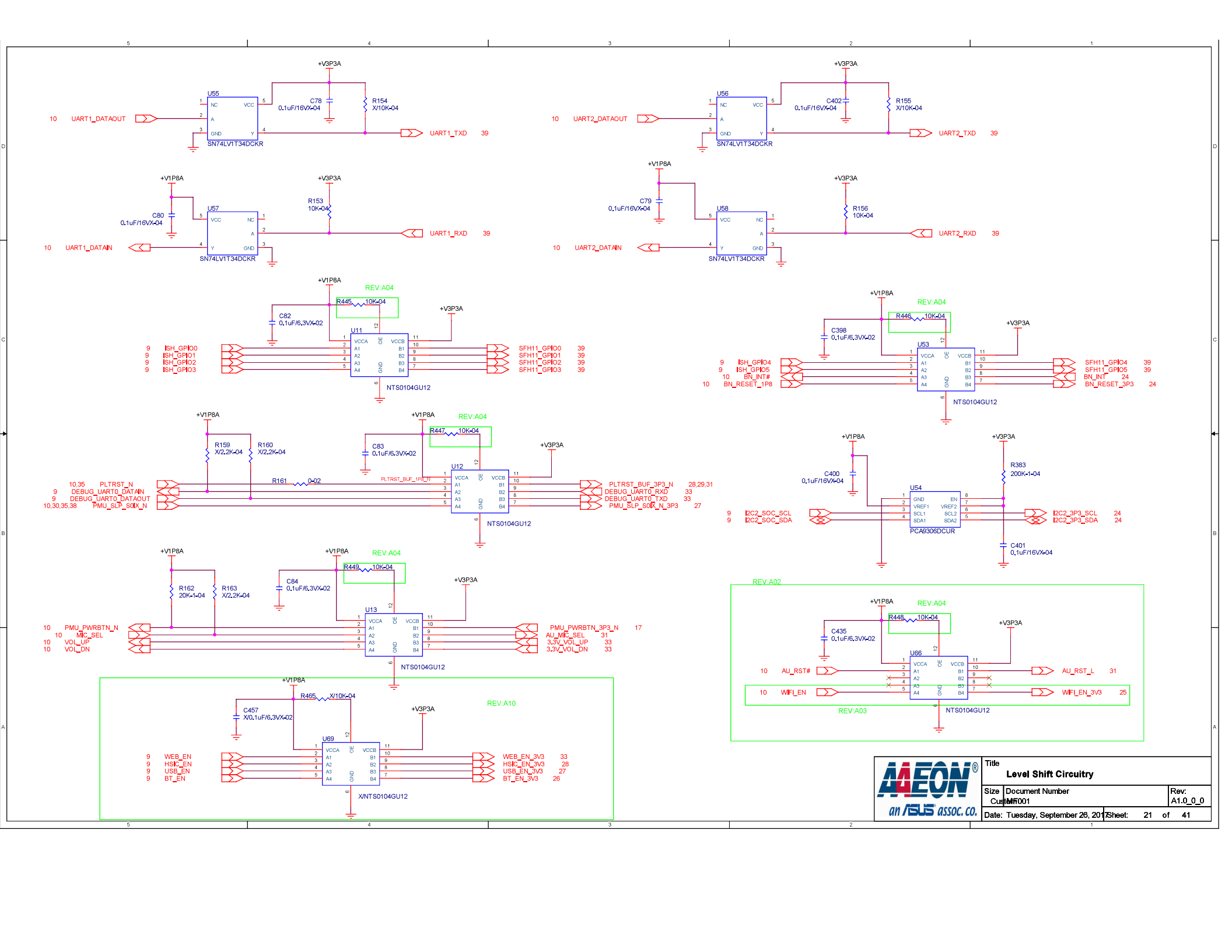
+V3P3A
U55
SN74LV1T34DCKR
C78
0.1uF/16VX-04
R154
X/10K-04
10 UART1_DATAOUT
UART1_TXD 39
+V1P8A
U57
C80
0.1uF/16VX-04
R153
10K-04
10 UART1_DATAIN
UART1_RXD 39
U56
C402
0.1uF/16VX-04
R155
X/10K-04
10 UART2_DATAOUT
UART2_TXD 39
U58
C79
0.1uF/16VX-04
R156
10K-04
10 UART2_DATAIN
UART2_RXD 39
REV:A04
R445 10K-04
C82
0.1uF/6.3VX-02
U11
NTS0104GU12
9 ISH_GPIO0
9 ISH_GPIO1
9 ISH_GPIO2
9 ISH_GPIO3
SFH11_GPIO0 39
SFH11_GPIO1 39
SFH11_GPIO2 39
SFH11_GPIO3 39
R446 10K-04
C398
0.1uF/6.3VX-02
U53
9 ISH_GPIO4
9 ISH_GPIO5
10 BN_INT#
10 BN_RESET_1P8
SFH11_GPIO4 39
SFH11_GPIO5 39
BN_INT 24
BN_RESET_3P3 24
R159
X/2.2K-04
R160
X/2.2K-04
R161 0-02
C83
0.1uF/6.3VX-02
R447 10K-04
U12
PLTRST_BUF_1P8_N
10,35 PLTRST_N
9 DEBUG_UART0_DATAIN
9 DEBUG_UART0_DATAOUT
10,30,35,38 PMU_SLP_S0IX_N
PLTRST_BUF_3P3_N 28,29,31
DEBUG_UART0_RXD 33
DEBUG_UART0_TXD 33
PMU_SLP_S0IX_N_3P3 27
C400
0.1uF/16VX-04
U54
PCA9306DCUR
R383
200K-1-04
C401
0.1uF/16VX-04
9 I2C2_SOC_SCL
9 I2C2_SOC_SDA
I2C2_3P3_SCL 24
I2C2_3P3_SDA 24
REV:A02
R162
20K-1-04
R163
X/2.2K-04
C84
0.1uF/6.3VX-02
R449 10K-04
U13
10 PMU_PWRBTN_N
10 MIC_SEL
10 VOL_UP
10 VOL_DN
PMU_PWRBTN_3P3_N 17
AU_MIC_SEL 31
3.3V_VOL_UP 33
3.3V_VOL_DN 33
C435
0.1uF/6.3VX-02
R448 10K-04
U66
10 AU_RST#
10 WIFI_EN
AU_RST_L 31
WIFI_EN_3V3 25
REV:A03
REV:A10
R465 X/10K-04
C457
X/0.1uF/6.3VX-02
U69
X/NTS0104GU12
9 WEB_EN
9 HSIC_EN
9 USB_EN
9 BT_EN
WEB_EN_3V3 33
HSIC_EN_3V3 28
USB_EN_3V3 27
BT_EN_3V3 26
AAEON
an ASUS assoc. co.
Title
Level Shift Circuitry
Size
Cust
Document Number
MF001
Rev:
A1.0_0_0
Date: Tuesday, September 26, 2017
Sheet: 21 of 41

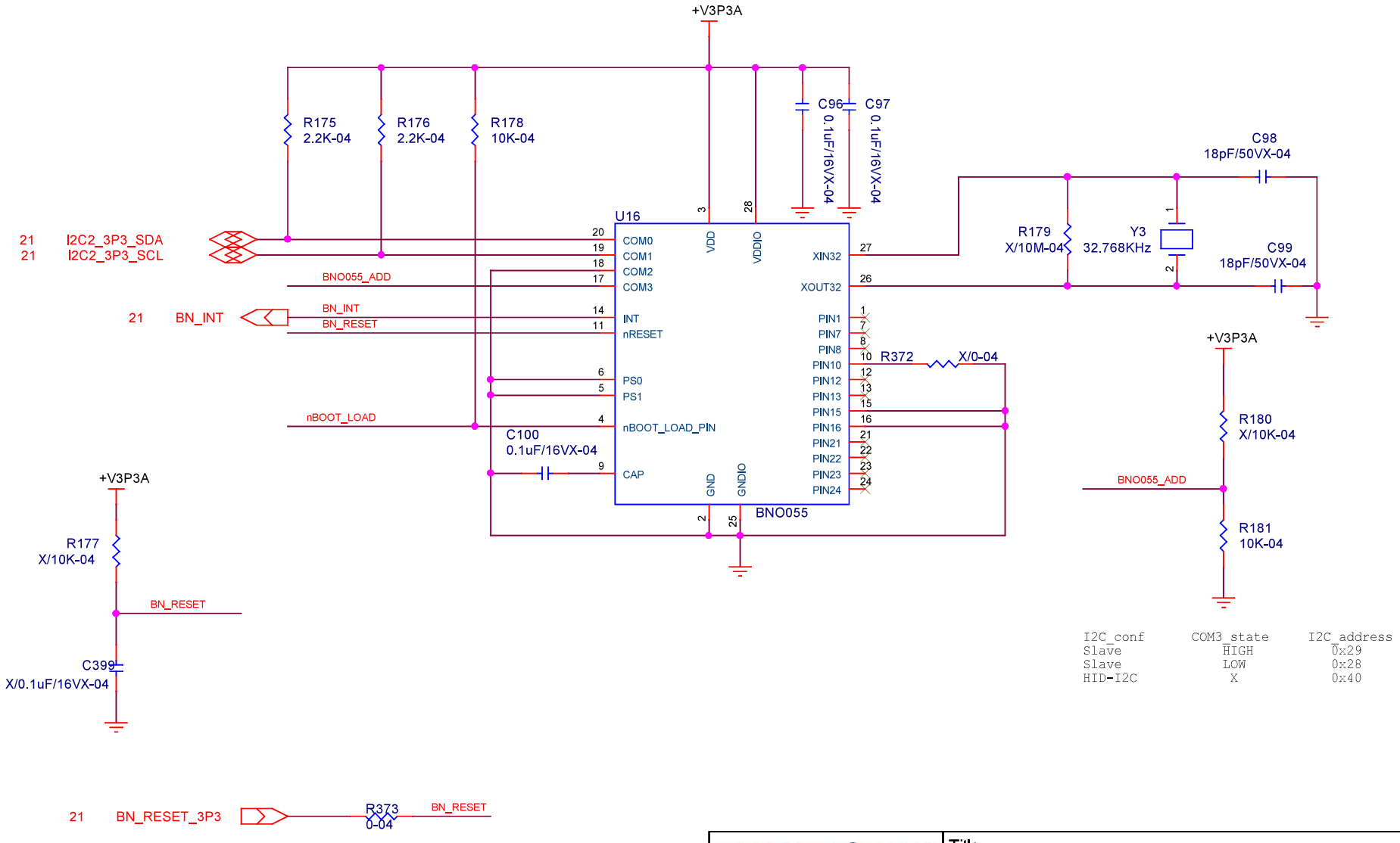

I2C_conf	COM3_state	I2C_address
Slave	HIGH	0x29
Slave	LOW	0x28
HID-I2C	X	0x40

AAEON an ASUS assoc. co.

Title: BNO055		
Size: A	Document Number: MF001	Rev: A1.0_0_0
Date: Tuesday, September 26, 2017	Sheet: 24 of 41	

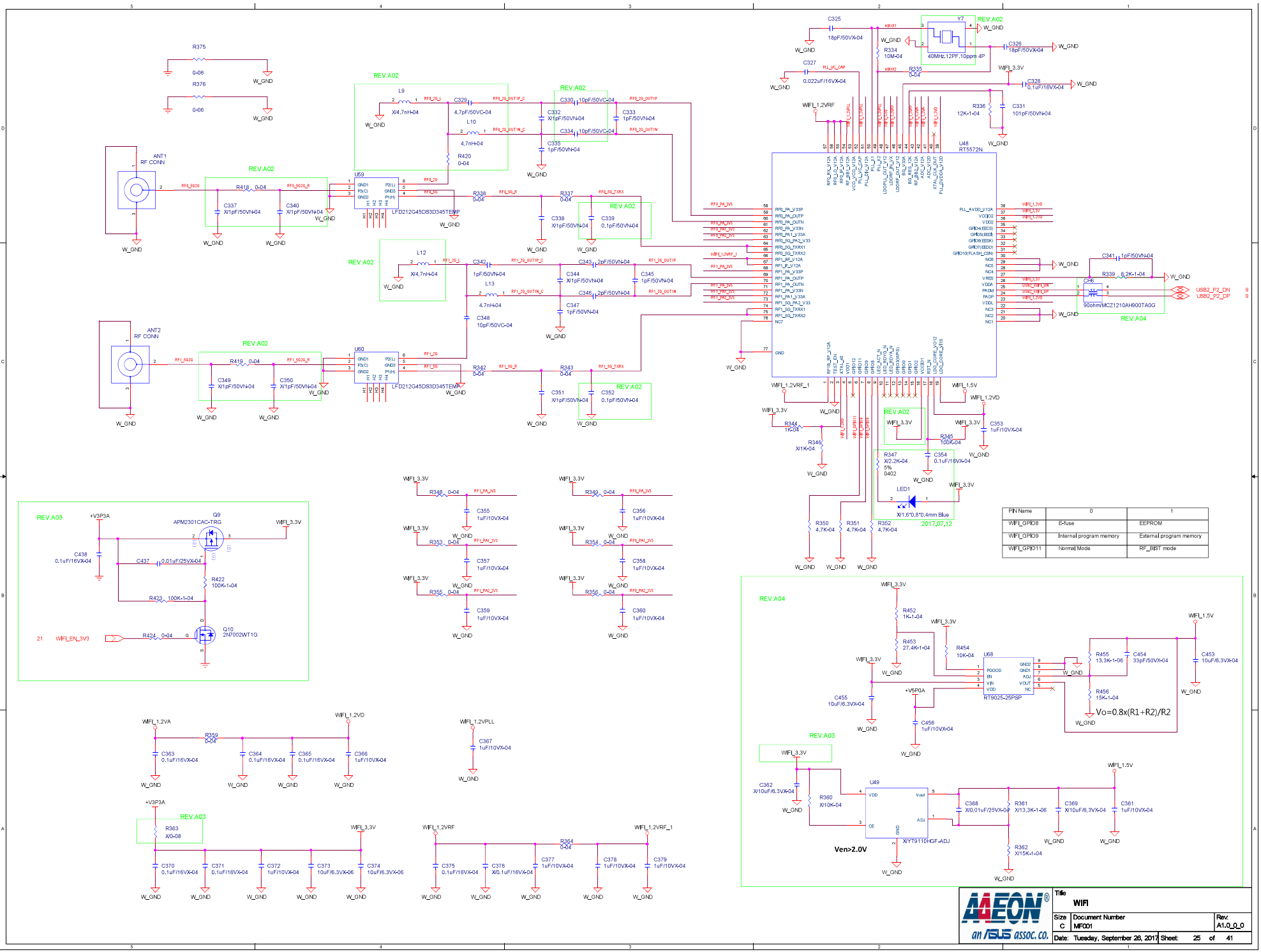

PIN Name	0	1
WIFI_GPIO8	E-fuse	EEPROM
WIFI_GPIO9	Internal program memory	External program memory
WIFI_GPIO11	Normal Mode	RF_BIST mode

AAEON an ASUS assoc. co.

Title	WIFI	
Size C	Document Number MF001	Rev. A1.0_0_0
Date: Tuesday, September 26, 2017	Sheet: 25 of 41	

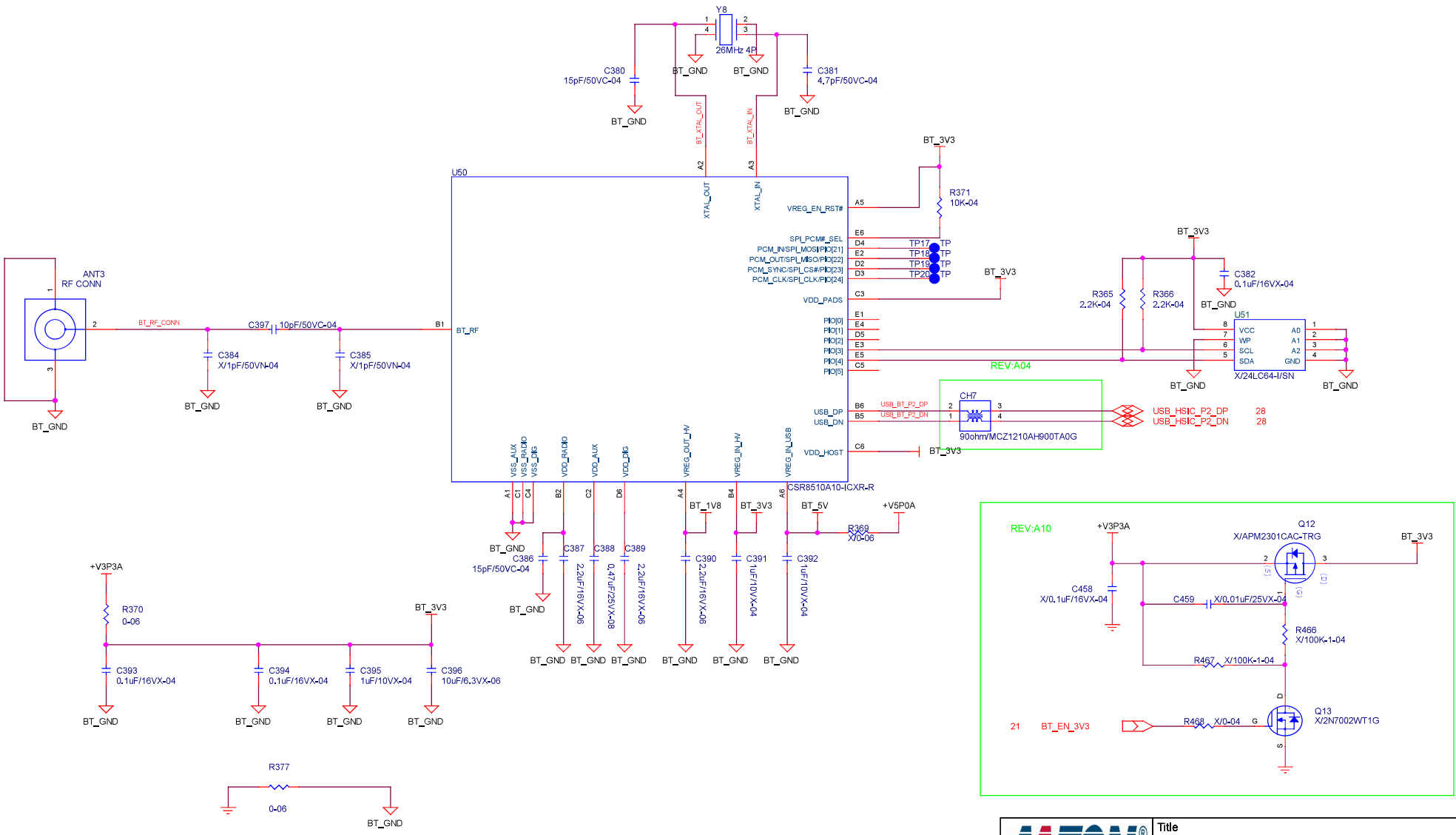

AAEON an ASUS assoc. co.	Title: BT_CSR CRS8510	
Size: B	Document Number: MF001	Rev: A1.0_0_0
Date: Tuesday, September 26, 2013	Sheet: 26 of 41	

USB 3.0 VCC

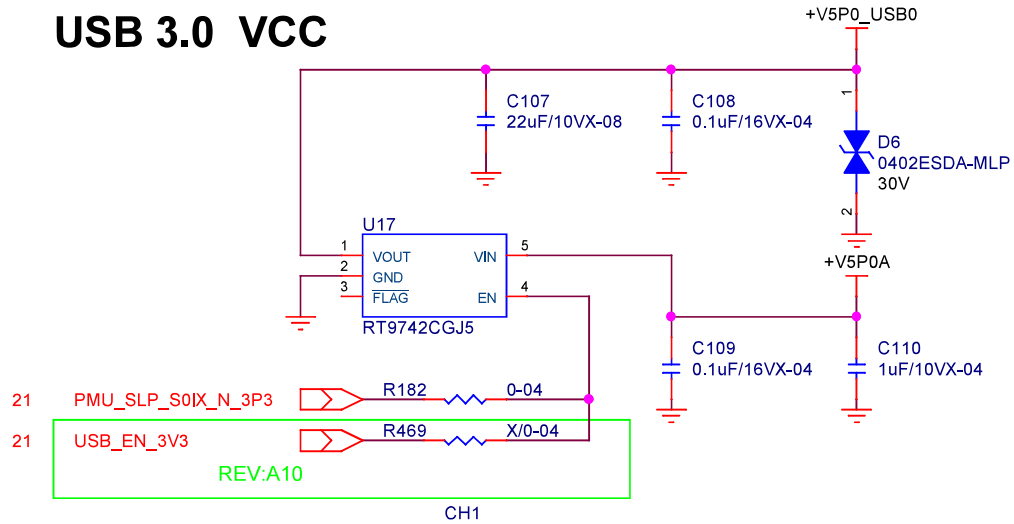

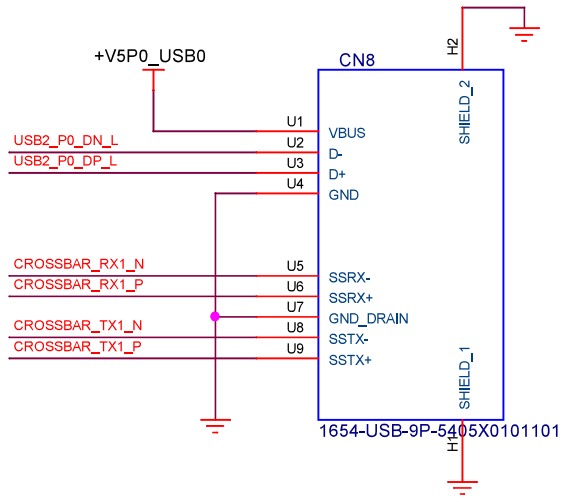

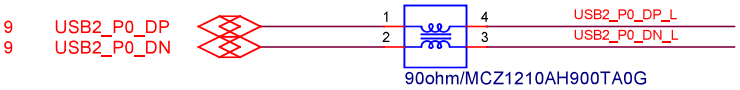

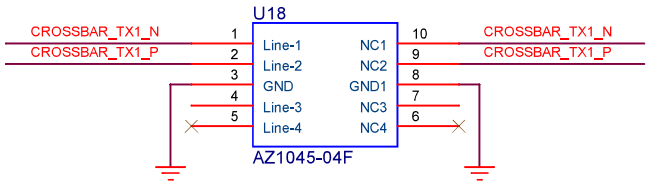

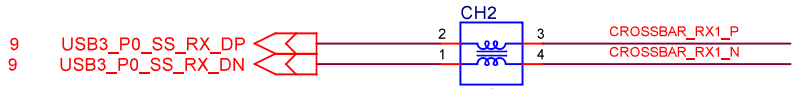

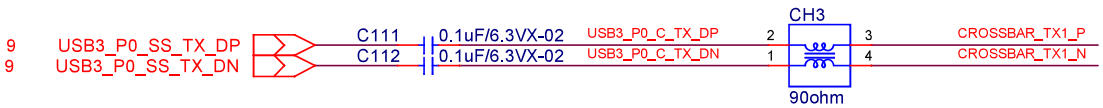

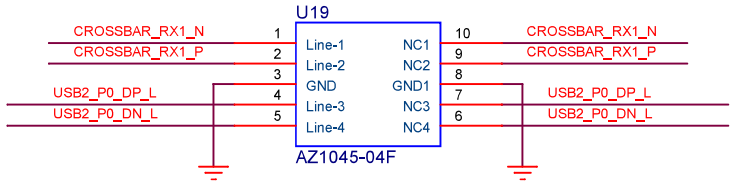

AAEON an ASUS assoc. co.

Title: **USB 3.0 Type-A**

Size	Document Number	Rev:
A	MF001	A1.0_0_0

Date: Tuesday, September 26, 2017 Sheet: 27 of 41

USB HSIC

CAD NOTE: PAD SHARING WITH HSIC_R

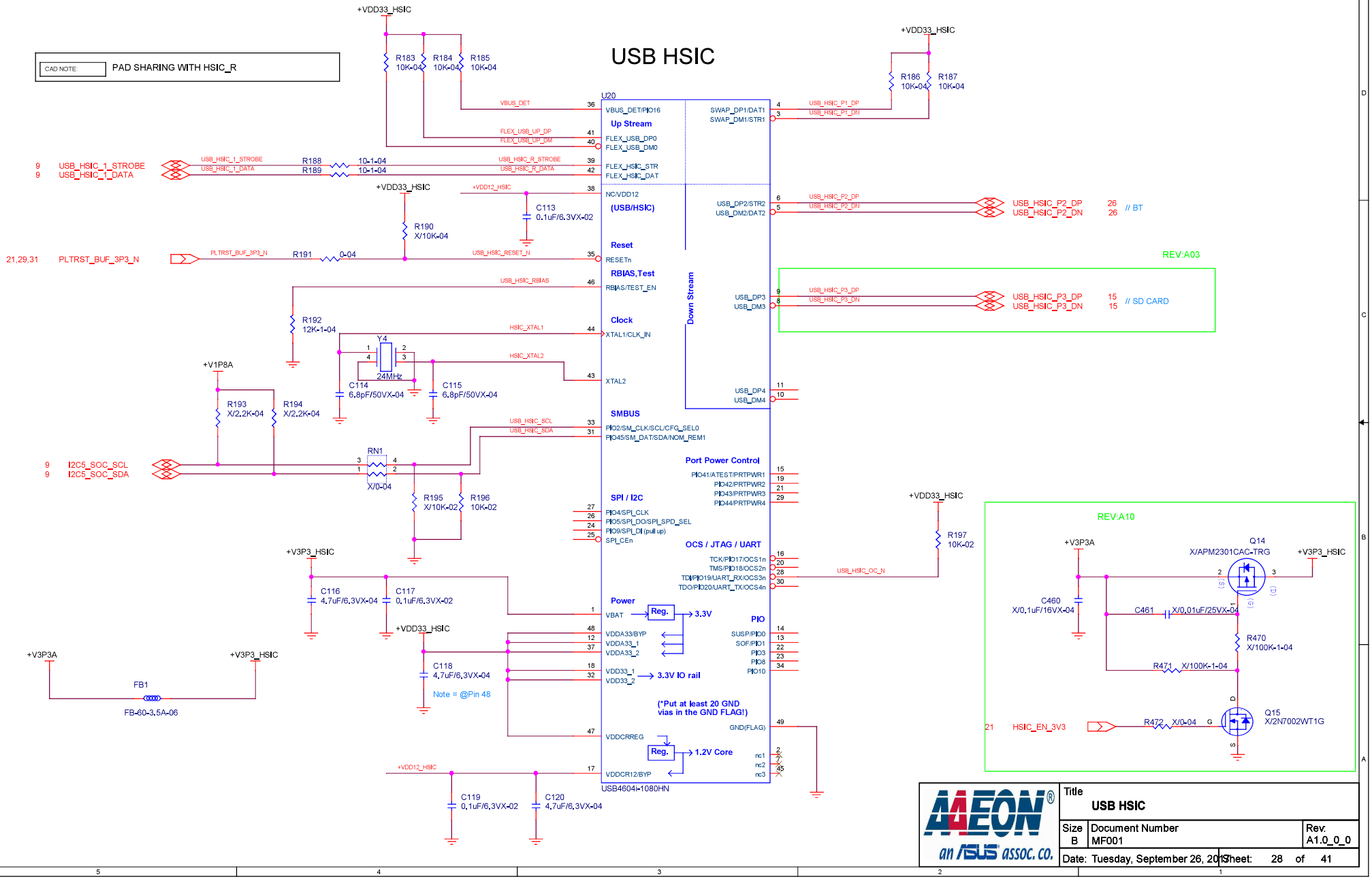

AAEON an ASUS assoc. co.	Title: USB HSIC	
Size: B	Document Number: MF001	Rev: A1.0_0_0
Date: Tuesday, September 26, 2013	Sheet: 28 of 41	

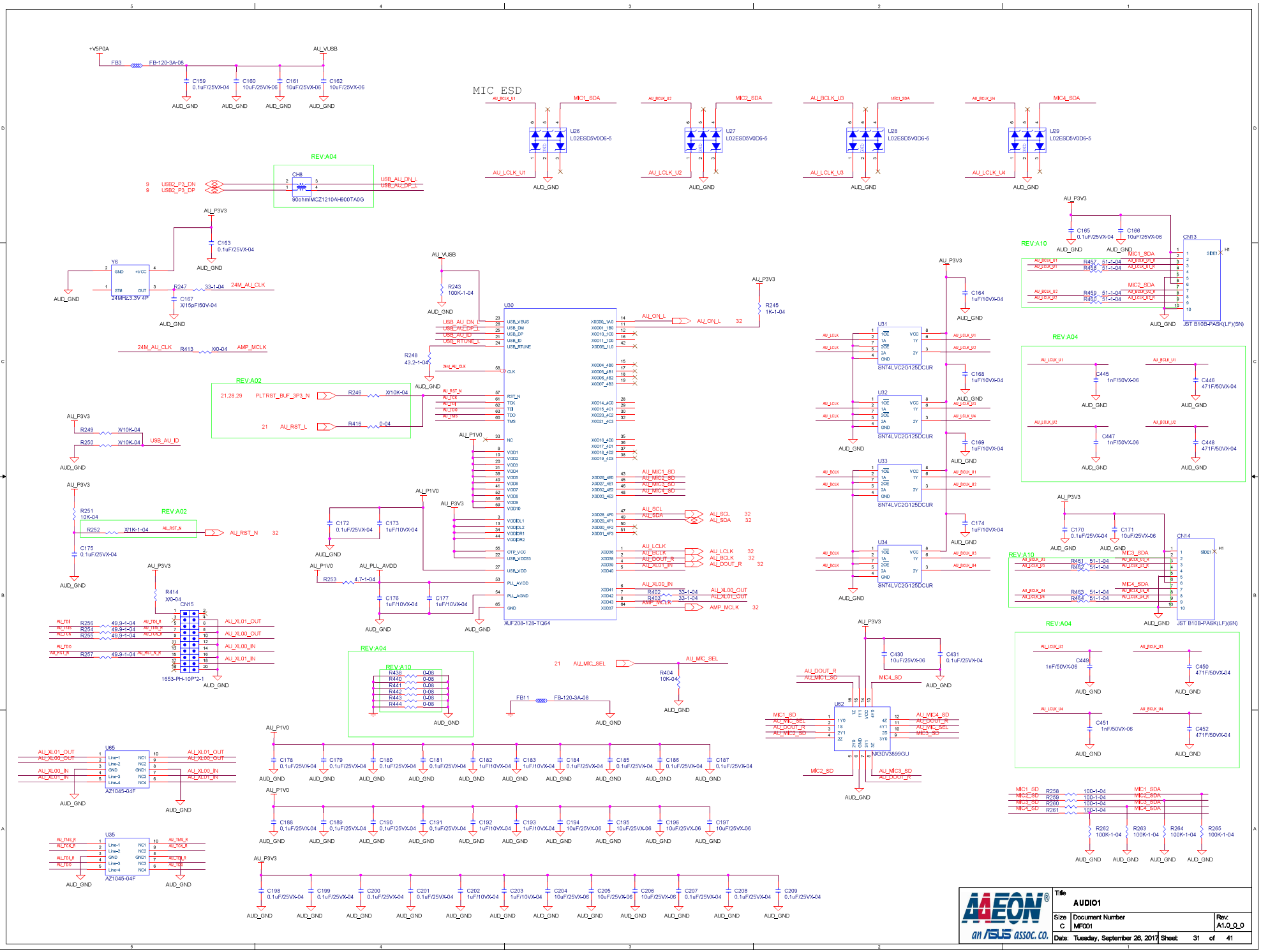
MIC ESD
U26 L02ESD5V0D6-5
U27 L02ESD5V0D6-5
U28 L02ESD5V0D6-5
U29 L02ESD5V0D6-5
U30 XUF208-128-TQ64
U31 SN74LVC2G125DCUR
U32 SN74LVC2G125DCUR
U33 SN74LVC2G125DCUR
U34 SN74LVC2G125DCUR
U62 NX3DV3899GU
U65 AZ1045-04F
U35 AZ1045-04F
CN13 JST B10B-PASK(LF)(SN)
CN14 JST B10B-PASK(LF)(SN)
CN15 1653-PH-10P*2-1
CH8 90ohm/MCZ1210AH600TA0G
Y6 24MHz,3.3V 4P
REV:A04
REV:A02
REV:A10
AUDIO1
Size C
Document Number MF001
Rev. A1.0_0_0
Date: Tuesday, September 26, 2017
Sheet: 31 of 41

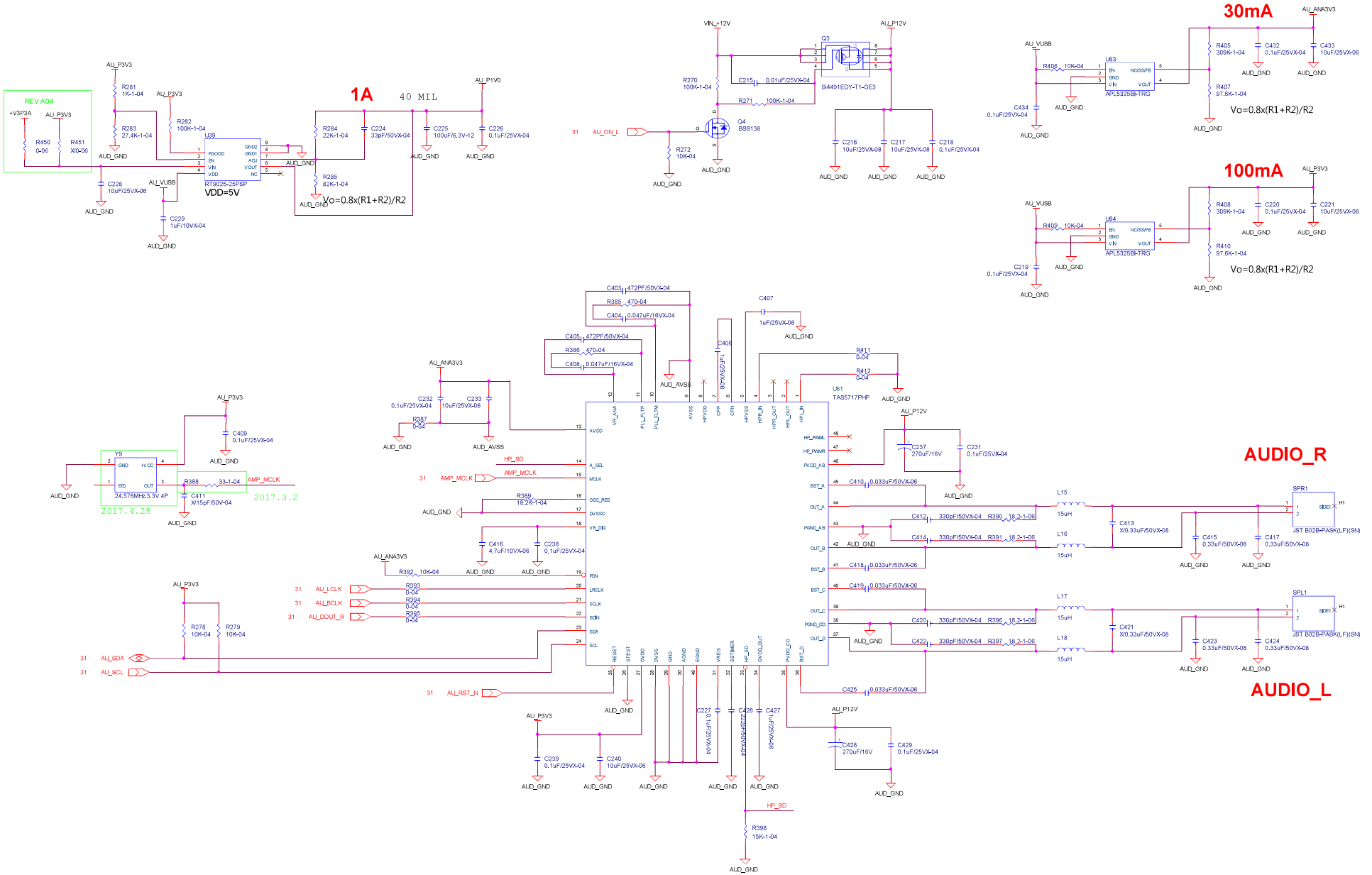

Title: AUDIO2			
Size: C	Document Number: MF001		Rev: A1.0_0_0
Date: Tuesday, September 26, 2017	Sheet: 32	of 41	

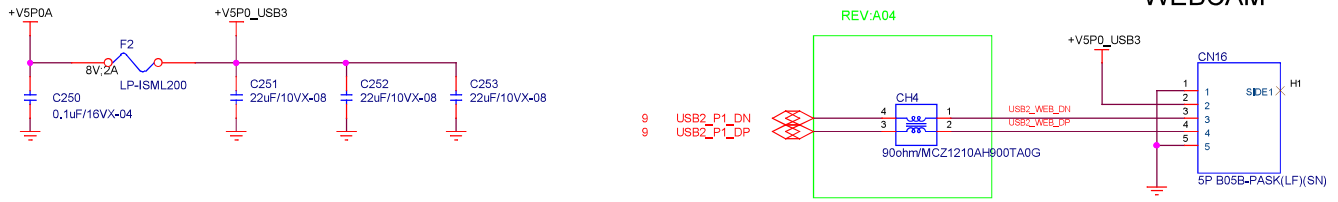

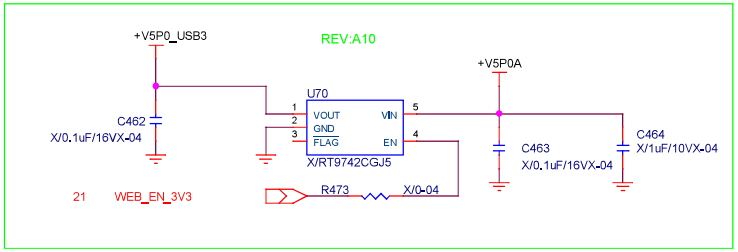

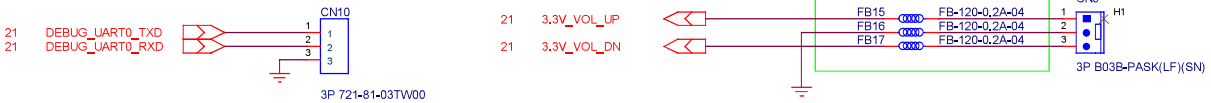

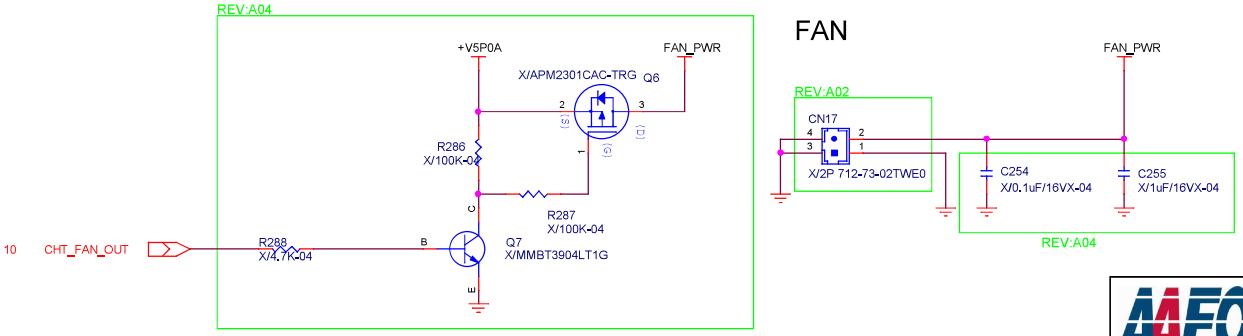

AAEON an ASUS assoc. co.

Title: WEBCAM & FAN		
Size: B	Document Number: MF001	Rev: A1.0_0_0
Date: Tuesday, September 26, 2013	Sheet: 33 of 41	

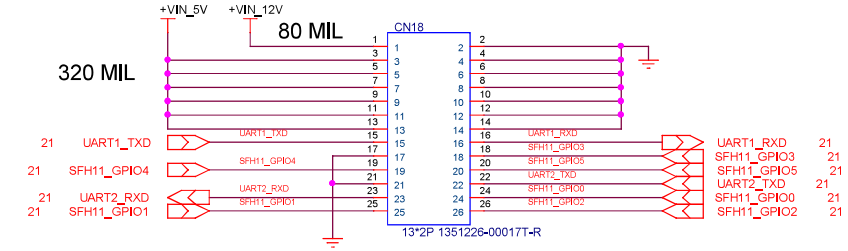

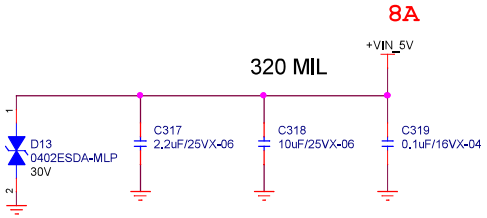

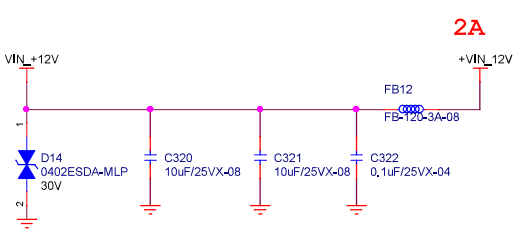

trace width: 320mil

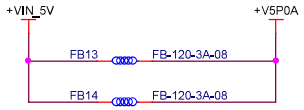

ESD

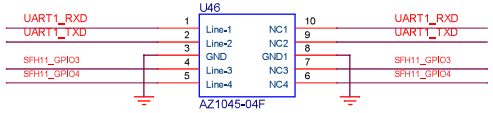

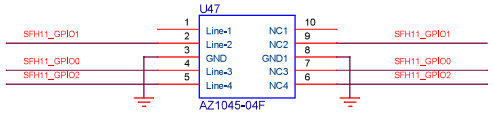

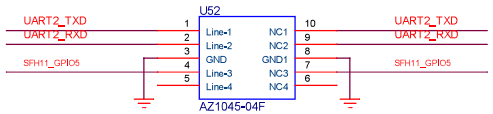

AAEON an ASUS assoc. co.	Title: DC IN 26 PIN CONNECTOR	
Size: B	Document Number: MF001	Rev: A1.0_0_0
Date: Tuesday, September 26, 2013	Sheet: 39 of 41	