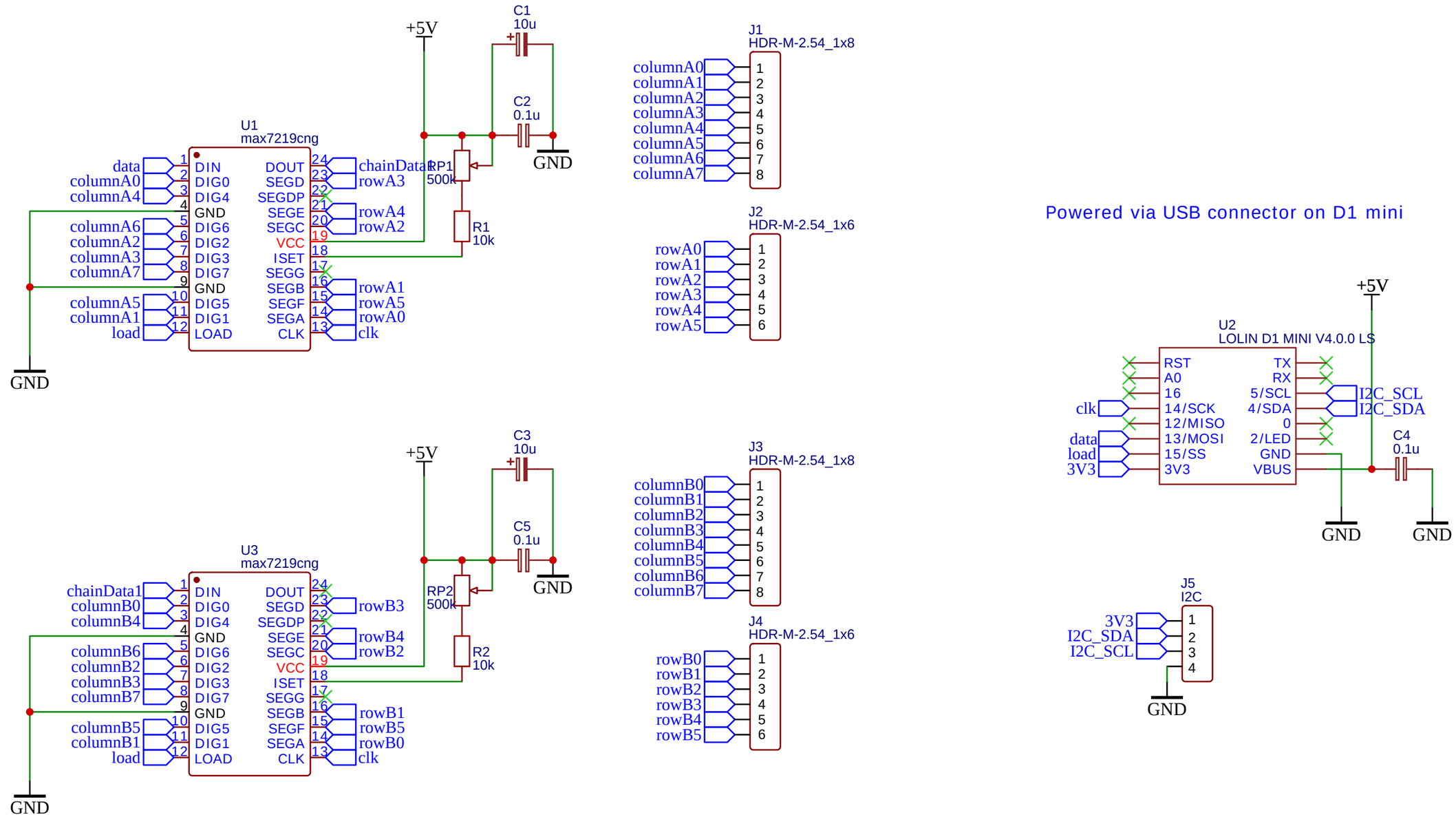

TITLE: Digital clock upgrade		REV: 1.1
EasyEDA	Company: Your Company	Sheet: 1/1
	Date: 2024-04-23 Drawn By: michalschwarz	