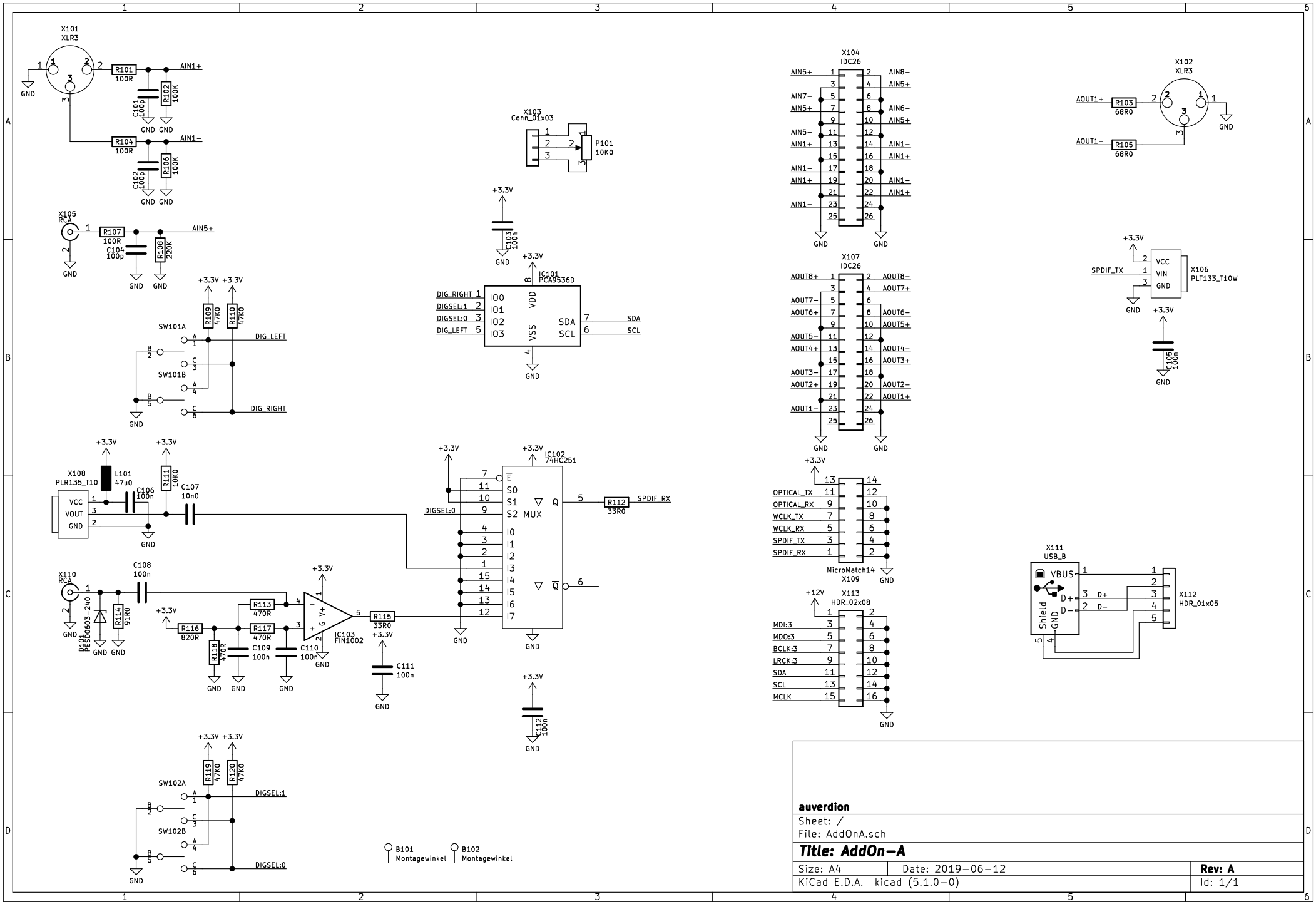

auverdion

Sheet: /

File: AddOnA.sch

Title: AddOn−A

Size: A4	Date: 2019−06−12	**Rev: A**
KiCad E.D.A. kicad (5.1.0−0)		Id: 1/1