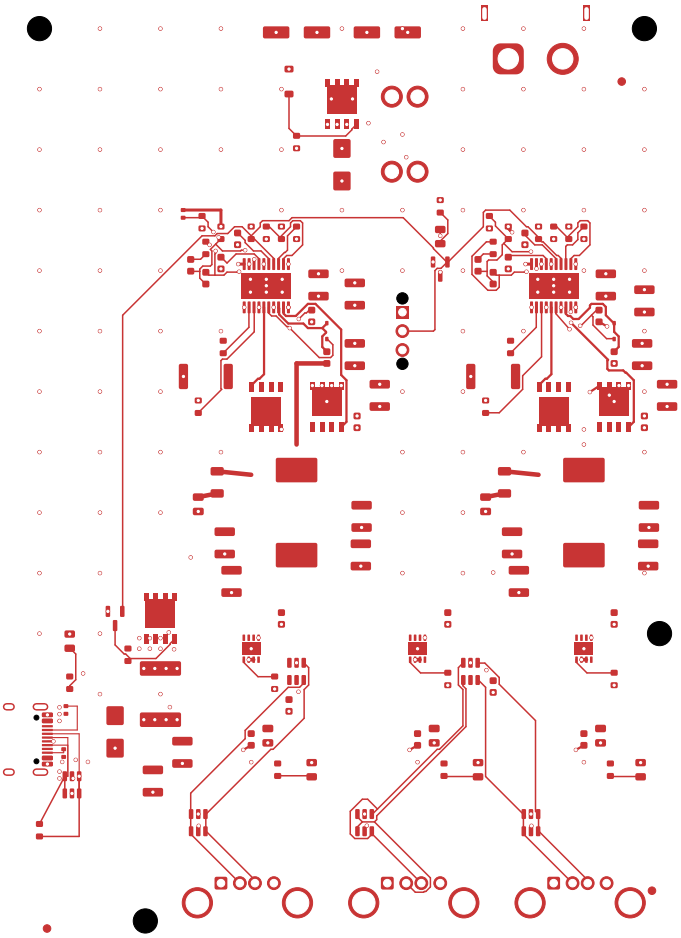

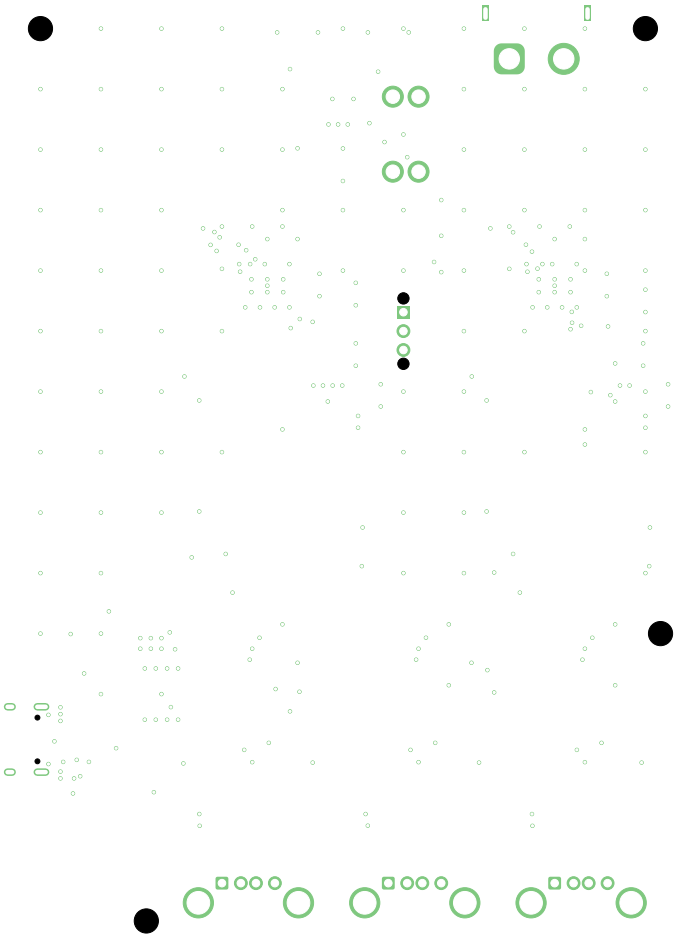

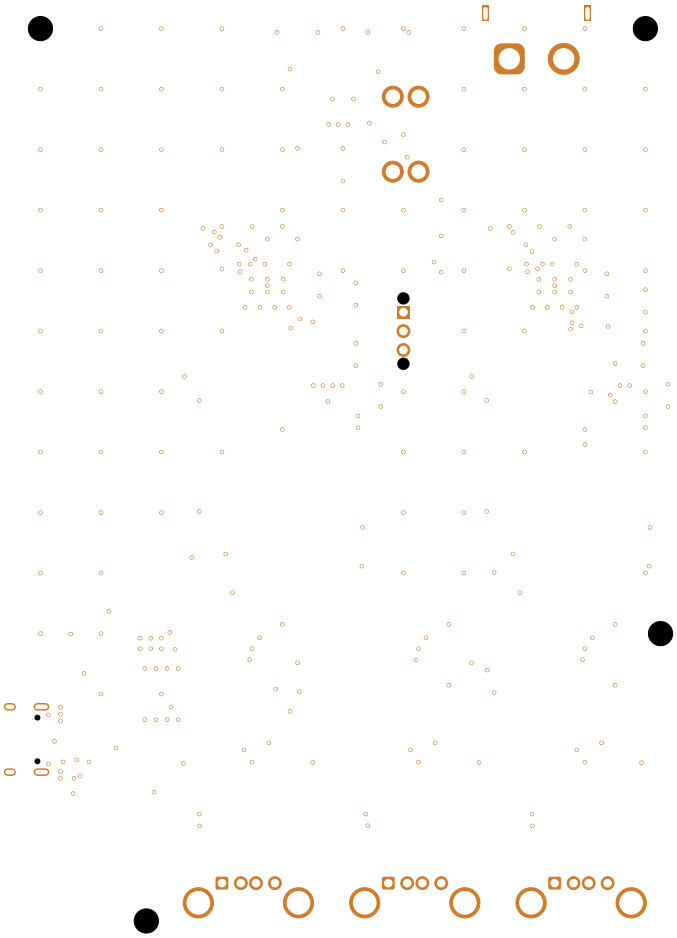
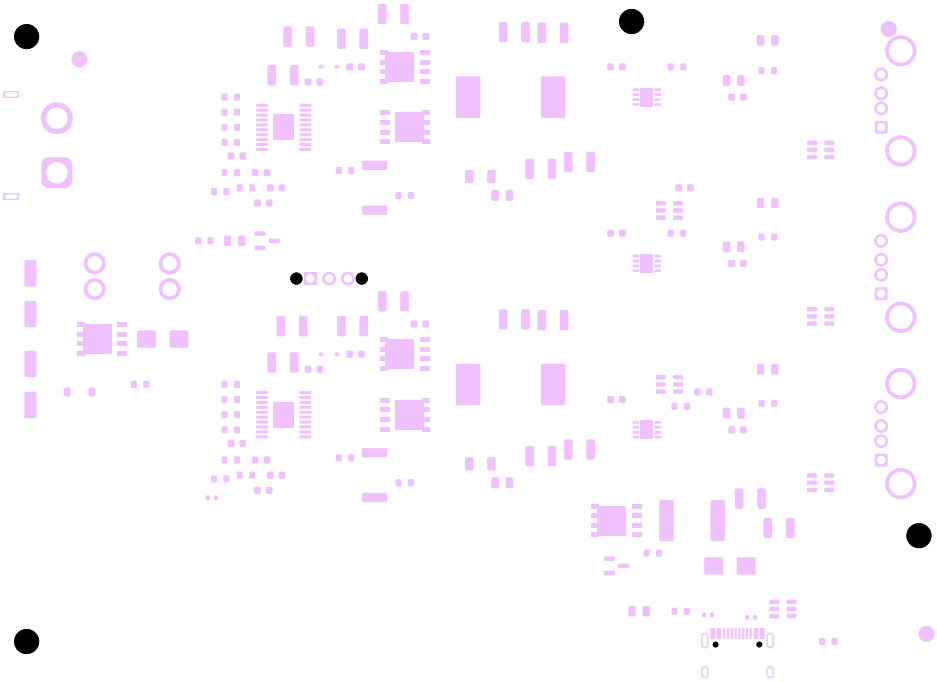
J1 FUSE 10A MINI
PROTECTED 3S + BAL-CHG ONLY
9-12.6V XT60 IN
PACK ON
PACK STILL LIVE AT XT60
LEDS DARK = SWITCH OFF
USB-A1 5V
USB-A 5V CHG no-data
USB-A2 5V
USB-A 5V CHG no-data
USB-A3 5V
USB-A 5V CHG no-data
F2 VBUS 5A POLYFUSE
USB-C 5V OK
USB-C 5A PI-ONLY NOT USB-PD
POWER-DIST BOARD - NOT A USB HUB
usb-hub-3s-v3