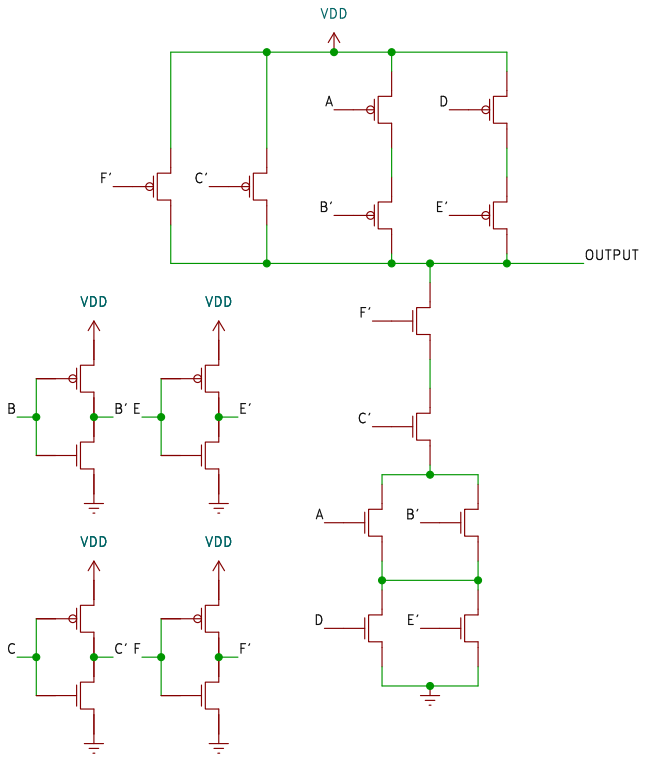

Sheet: /PowerSource/Untitled Sheet/
File: untitled.kicad_sch

Title:

Size: A4	Date:	Rev:
KiCad E.D.A. kicad 7.0.6		Id: 6/6